| | |
|---|---|
| Contract for: | **Wastewater Treatment Facility** |
| Between: | **English River Enterprises Property Management LP** |
| And: | **Wright Construction Western Inc.** |
| Project: | **7603-002-00** |
| Contract Date: | **January 15, 2021** |
| Volume: | **4 of 6** |

aerospace
climate control
electromechanical
filtration
fluid & gas handling
hydraulics
pneumatics
process control
sealing & shielding

Click here to view bookmarks.

(Revised 04-26-2018)

# Air Preparation Units

## Parker-Watts General Line FRL, Hi-Flow FRL & Desiccant Dryers

Catalog 0730-2

Parker

ENGINEERING YOUR SUCCESS.

## Warnings, Offer of Sale

### ⚠ CAUTION:

Polycarbonate bowls, being transparent and tough, are ideal for use with Filters and Lubricators. They are suitable for use in normal industrial environments, but should not be located in areas where they could be subjected to direct sunlight, an impact blow, nor temperatures outside of the rated range. As with most plastics, some chemicals can cause damage. Polycarbonate bowls should not be exposed to chlorinated hydro-carbons, ketones, esters and certain alcohols. They should not be used in air systems where compressors are lubricated with fire-resistant fluids such as phosphate ester and di-ester types.

Metal bowls are recommended where ambient and/or media conditions are not compatible with polycarbonate bowls. Metal bowls resist the action of most such solvents, but should not be used where strong acids or bases are present or in salt laden atmospheres. Consult the factory for specific recommendations where these conditions exist.

**TO CLEAN POLYCARBONATE BOWLS USE MILD SOAP AND WATER ONLY! DO NOT** use cleansing agents such as acetone, benzene, carbon tetrachloride, gasoline, toluene, etc., which are damaging to this plastic.

**Metal bowl guards are recommended for all applications.**

### ⚠ CAUTION:

**REGULATOR PRESSURE ADJUSTMENT** – The working range of knob adjustment is designed to permit outlet pressures within their full range. Pressure adjustment beyond this range is also possible because the knob is not a limiting device. This is a common characteristic of most industrial regulators, and limiting devices may be obtained only by special design.

### ⚠ WARNING

FAILURE OR IMPROPER SELECTION OR IMPROPER USE OF THE PRODUCTS AND/OR SYSTEMS DESCRIBED HEREIN OR RELATED ITEMS CAN CAUSE DEATH, PERSONAL INJURY AND PROPERTY DAMAGE.

This document and other information from Parker Hannifin Corporation, its subsidiaries and authorized distributors provide product and/or system options for further investigation by users having technical expertise. It is important that you analyze all aspects of your application including consequences of any failure, and review the information concerning the product or system in the current product catalog. Due to the variety of operating conditions and applications for these products or systems, the user, through its own analysis and testing, is solely responsible for making the final selection of the products and systems and assuring that all performance, safety and warning requirements of the application are met.

The products described herein, including without limitation, product features, specifications, designs, availability and pricing, are subject to change by Parker Hannifin Corporation and its subsidiaries at any time without notice.

### Offer of Sale

The items described in this document are hereby offered for sale by Parker Hannifin Corporation, its subsidiaries or its authorized distributors. This offer and its acceptance are governed by the provisions stated on the separate page of this document entitled “Offer of Sale”.

© Copyright 2005 - 2012, Parker Hannifin Corporation. All Rights Reserved.

**Parker Hannifin Corporation**
Pneumatic Division
Richland, Michigan
www.wattsfluidair.com

**Table of Contents**

General Information - Particulate & Coalescing Filters....2-3

Particulate Filters
- Minature Particulate Filters....4-7
- Compact Particulate Filters....8-9
- Standard Particulate Filters....10-11
- Hi-Flow Particulate Filters....12-19

Coalescing Filters
- Miniature Coalescing Filters....20-23
- Compact Coalescing Filters....24-25
- Standard Coalescing Filters....26-27
- Hi-Flow Coalescing Filters....28-31

Bulk Liquid Separators....32-35

Desiccant Dryers....36-37

General Information - Regulators....38-39

Regulators
- Miniature Regulators....40-49
- Economy Regulators....50-51
- Compact Regulators....52-53
- Standard Regulators....54-57
- Hi-Flow Regulators....58-61
- Pilot Operated Regulators....62-67

General Information - Filter / Regulators....68-69

Filter / Regulators
- Miniature Filter / Regulators....70-75
- Compact Filter / Regulators....76-77
- Standard Filter / Regulators....78-79

General Information - Lubricators....80-81

Lubricators
- Miniature Mist Lubricators....82-85
- Compact Micro-Mist Lubricators....86-87
- Standard Micro-Mist Lubricators....88-89
- Standard Mist Lubricators....90-93
- Hi-Flow Mist Lubricators....94-95

Combinations
- Miniature Combinations....96-99
- Compact & Standard Combinations....100-103

Safety Guide....106-107

Offer of Sale....108



**Parker Hannifin Corporation**
Pneumatic Division
Richland, Michigan
www.wattsfluidair.com

# Particulate and Coalescing Filters

## Filtration

The average 10-hp compressor handles four million cubic inches of air per hour. This air can contain billions of contaminating particles.

At high concentration and high speed, these particles can be extremely harmful. They block orifices, erode components, and clog clearances between moving parts.

In addition, when ambient air is drawn into a compressor, it can, depending on weather conditions, have relative humidity up to 100 percent. As air is compressed and cooled, some water vapor1 condenses out as free water, and even with a compressor aftercooler, some moisture is swept downstream into the air system. This may result in rusted pneumatic tools and components, contaminated lubricants, and frozen air lines during low temperature periods.

Other types of foreign matter in air lines include: impurities generated within the air line, such as wear particles, pipe scale and rust; construction and assembly debris; and contaminants introduced into the air system during maintenance or through leakage passages.

All these contaminants, which are of a size to cause air stream problems, should be removed by the filter.

[1] Water vapor, which is a gas, is not a contaminant in pneumatic systems until it condenses.

## How to Select the Proper Filter

Filter element rating is the prime selection criterion. This rating must match the requirements of all downstream components. Next, the flow capacity and pressure rating of the filter should be considered. Finally, port size should match system piping to avoid unnecessary pressure drops through restricting adapters.

Bowl material and the type of drain for the application are other choices to be made.

The first step in choosing a filter is to determine the filtration requirements of the most critical components used in that system.

Contamination particle size is measured in micrometers. A micrometer is one millionth of a meter or 0.000039 inches. Frequently, micrometer is abbreviated as micron or symbolized by the Greek letter μ. Particle-removing filter elements are rated2 according to the particle size they will trap. For most industrial applications, filter elements rated at 40 microns are adequate. When necessary, filtration as low as 5 microns or finer can be provided. Remember, however, that finer filtration increases the pressure drop through the element. As micron size rating varies, so does the size and type of filter.

Most oils entrained in a compressed air stream are in the form of tiny mist or aerosol droplets which can pass through a standard industrial filter element. If it is necessary to remove these aerosols, an oil-removal type coalescing filter can be used. The sub-micron oil particles which escape an oil-removal filter should have no detrimental effect on industrial pneumatic components. But if these particles must be removed for applications such as spray painting, a coalescing type element should be used.

[2] The inexact nominal filter element rating indicates that most particles that size or larger will be trapped. The absolute rating indicates that all particles that size or larger will be trapped.

## Filter Construction

Most pneumatic filters consist of two basic elements: a die-cast body, into which the inlet and outlet piping is connected, and a sealed removable bowl which contains collected contaminants.

The bowl is fitted with a drain mechanism to remove liquids before they rise to the baffle level. The drain system usually operates while the filter is under pressure, but the unit must be exhausted to remove the bowl for cleaning and element service. The piping need not be disturbed

Generally a transparent bowl is the most convenient because it provides easy visual inspection of the sump level. However, hostile environment, higher pressure, or higher temperature may require a metal bowl for safety.

The most common plastic used for bowls is polycarbonate. This material performs satisfactorily for air pressures below 150 PSIG and temperatures between 40° and 120° F. Parker offers polyethylene bowl guards for added safety.

As the pressure or temperature requirement increases, you may have to specify a metal bowl with sight gauge. For extreme conditions, it is recommended that the sight gauge be eliminated. (Please refer to the individual model descriptions for specifications on bowls.)

Thus, the environment determines the choice of bowl. Polycarbonates offer great strength and visibility, but can be attacked by certain chemicals. Metal bowls offer the highest pressure and temperature rating, and provide superior protection when installed in an environment containing chemicals that are incompatible with polycarbonate.

## Filter Operation

When pressurized air enters a typical filter body. The curved inlet and deflector direct the incoming air in a downward whirling pattern. Centrifugal force hurls the larger solid and liquid water particles outward where they collect on the inner surface of the filter bowl. The particles spiral down past a baffle into a quiet chamber. The baffle prevents turbulent air in the upper bowl from re-entraining liquid contaminants and carrying them downstream.

Then the dry, cleaner air follows a convoluted path through the filter element, where finer solid particles are filtered out. Finally, filtered air passes up the center of the element and out the discharge port.



**Parker Hannifin Corporation**
Pneumatic Division
Richland, Michigan
www.wattsfluidair.com

# Particulate and Coalescing Filters

**⚠ Warning**

**The plastic material used to manufacture the plastic bowls, and the sight gauge on metal bowls, may be attacked by certain chemicals. Do not use this filter on systems with air supplied by a compressor lubricated with synthetic oils or oils containing phosphate esters or chlorinated hydrocarbons. These oils can carry over into the air lines and chemically attack and possibly rupture the bowl or sight gauge. Also, do not expose the bowl or sight gauge to materials such as carbon tetrachloride, trichlorethylene, acetone, paint thinner, cleaning fluids, or other harmful materials, for they too will cause the plastic to craze and/or rupture. For use in environments where these, or any, chemicals may be present, consult the factory for approval.**

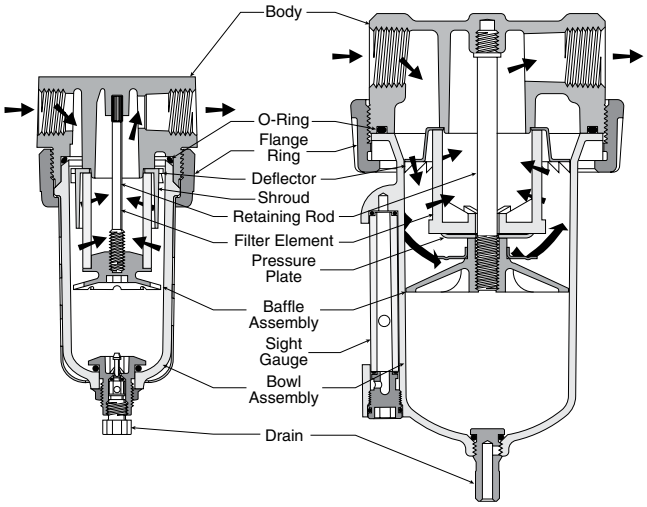


**Particulate Filters**

## Coalescing Filters

These high-efficiency filters operate on a somewhat different principle than particulate air filters. The key difference is in the element, where a fiber network is narrowly spaced to trap smaller contaminants. The special fibers hold any liquid particle which contacts them.

Pre-filtered (A particulate filter must be used prior to a coalescing filter) air enters the cylindrical element at the center. As it flows through the element, particles are captured by three different mechanisms: direct interception as particles impinge on the fibers; inertial impaction as particles are thrown against fibers by the turbulent air stream; and diffusion as smaller particles vibrate with Brownian movement to collide with fibers and other particles. As a result, coalescing elements can capture particles smaller than the nominal size of the flow passages through the element.

Collected liquid migrates to the crossing points of the fibers where larger drops form or coalesce. Pressure differential through the element then forces these drops to the downstream surface of the element where they gravitate downward to the sump.

The filtered air then exits through the outlet port.

It is very important that the air be pre-filtered, as larger contaminants tend to block the passages between fibers, reducing the efficiency of the coalescing element.

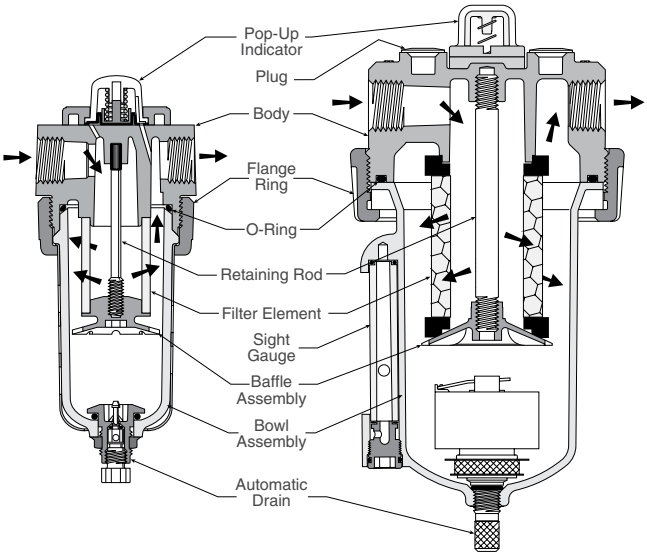


**Coalescing Filters**



**Parker Hannifin Corporation**
Pneumatic Division
Richland, Michigan
www.wattsfluidair.com

# 14F Filters – Miniature

## Features

- Excellent water removal efficiency
- Unique deflector plate that creates swirling of the air stream ensuring maximum water and dirt separation
- Easily disassembled for servicing without the use of tools
- 5 Micron element standard
- Interchangable twist and automatic pulse drains
- High flow: 1/8" – 22 SCFM§
  1/4" – 24 SCFM§

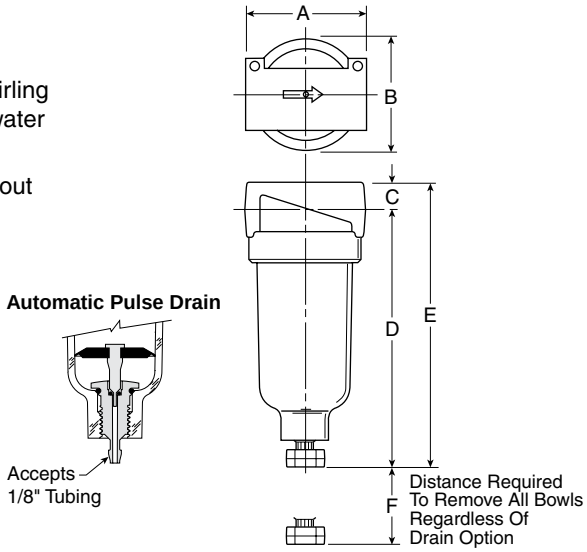


| Port Size | NPT | |
|---|---|---|
| | Twist Drain | Automatic Pulse Drain |
| Poly Bowl ‡ | | |
| 1/8" | **14F01B*** | **14F05B*** |
| 1/4" | **14F11B*** | **14F15B*** |
| Metal Bowl without Sight Gauge | | |
| 1/8" | **14F03B*** | **14F07B*** |
| 1/4" | **14F13B*** | **14F17B*** |

**Standard part numbers shown bold.**
**For other models refer to ordering information below.**

‡ For polycarbonate bowl see Caution on page inside cover.

§ SCFM = Standard cubic feet per minute at 90 PSIG inlet and 5 PSIG pressure drop.

| 14F Filter Dimensions | | |
|---|---|---|
| **A** 1.69 (43) | **B** 1.53 (39) | **C** .39 (10) |
| **D** 3.82 (97) | **D†** 3.87 (99) | **E** 4.21 (107) |
| **E†** 4.26 (108) | **F** 1.60 (41) | |

Inches (mm)

† With Automatic Pulse Drain.

## Ordering Information

| 14F | 1 | 1 | B | * | |
|---|---|---|---|---|---|

**Port Size**
- **0 1/8 Inch**
- **1 1/4 Inch**

**Bowl Options**

Polycarbonate Bowl
- **1 Twist Drain**
- **5 Automatic Pulse Drain**

Metal Bowl
- **3 Twist Drain**
- **7 Automatic Pulse Drain**

**Elements**
- A 40 Micron
- **B 5 Micron**
- Z Adsorber

**Engineering Level**
- * Will be Entered at Factory

**Port Type**
- **Blank NPT**
- 1 BSPP
- 2 BSPT

**BOLD ITEMS ARE MOST POPULAR.**



**Parker Hannifin Corporation**
Pneumatic Division
Richland, Michigan
www.wattsfluidair.com

## Technical Information

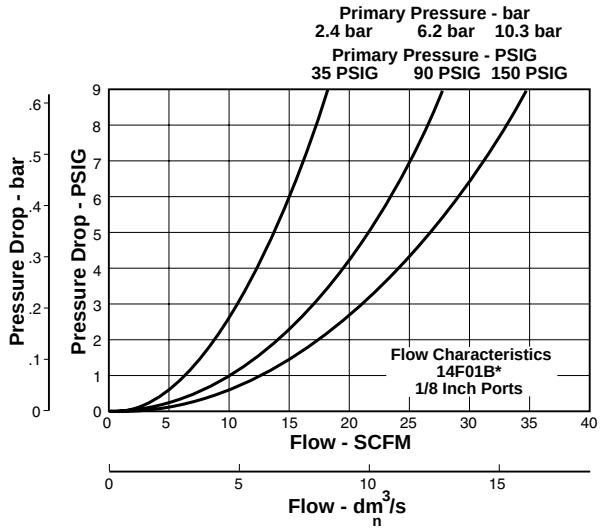


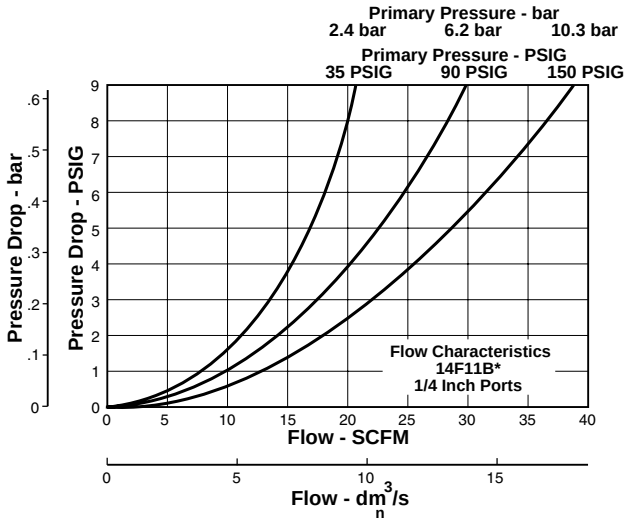


### ⚠ CAUTION:

Polycarbonate bowls and sight dome, being transparent and tough, are ideal for use with Filters and Lubricators. They are suitable for use in normal industrial environments, but should not be located in areas where they could be subjected to direct sunlight, an impact blow, nor temperatures outside of the rated range. As with most plastics, some chemicals can cause damage. Polycarbonate bowls and sight dome should not be exposed to chlorinated hydro-carbons, ketones, esters and certain alcohols. They should not be used in air systems where compressors are lubricated with fire-resistant fluids such as phosphate ester and di-ester types.

Metal bowls are recommended where ambient and/or media conditions are not compatible with polycarbonate bowls. Metal bowls resist the action of most such solvents, but should not be used where strong acids or bases are present or in salt laden atmospheres. Consult the factory for specific recommendations where these conditions exist.

**TO CLEAN POLYCARBONATE BOWLS USE MILD SOAP AND WATER ONLY! DO NOT** use cleansing agents such as acetone, benzene, carbon tetrachloride, gasoline, toluene, etc., which are damaging to this plastic.

**Metal bowl guards are recommended for all applications.**

## 14F Filter Kits & Accessories

**Bowl Kits –**
- Poly Bowl –
  - Automatic Pulse Drain ..... PS408B
  - Twist Drain ..... PS404
- Metal Bowl –
  - Automatic Pulse Drain ..... PS451B
  - Twist Drain ..... PS447B

**Filter Element Kits –**
- 40 Micron ..... PS401
- 5 Micron ..... PS403
- 5 Micron Cartridge Kit ..... PS407
- Adsorber ..... PS452

**Mounting Bracket Kit** ..... PS417B

## Specifications

**Automatic Pulse Drain Tube Barb** ..... 1/8 Inch

**Bowl Capacity** ..... 1 Ounce

**Port Threads** ..... 1/8, 1/4 Inch

**Pressure & Temperature Ratings –**
- Polycarbonate Bowl ..... 0 to 150 PSIG (0 to 10.3 bar)
  32°F to 125°F (0°C to 52°C)
- Metal Bowl ..... 0 to 250 PSIG (0 to 17.2 bar)
  32°F to 175°F (0°C to 80°C)
- Automatic Pulse Drain ..... 10 to 250 PSIG (0.7 to 17.2 bar)
  at 125°F (52°C) or less

**Weight** ..... 0.41 lb. (0.18 kg)

## Materials of Construction

**Body** ..... Zinc

**Bowls** ..... Transparent Polycarbonate
Metal (Zinc) Bowl w/o Sight Gauge

**Deflector, Element Holder & Baffle** ..... Plastic

**Drains –**
- Twist Drain –
  - Body & Stem ..... Plastic
  - Seals ..... Nitrile
- Automatic Pulse Drain –
  - Piston & Seals ..... Nitrile
  - Stem, Seat, Adaptor & Washers ..... Aluminum

**Filter Elements –**
- 5 Micron (Standard) ..... Plastic
- 40 Micron (Optional) ..... Plastic
- Adsorber (Optional) ..... Activated Charcoal

**Seals** ..... Nitrile



**Parker Hannifin Corporation**
Pneumatic Division
Richland, Michigan
www.wattsfluidair.com

# F504 Filters – Miniature

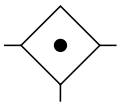

## Features

- Excellent water removal efficiency
- Unique deflector plate that creates swirling of the air stream ensuring maximum water and dirt separation
- Easily disassembled for servicing without the use of tools
- Interchangeable twist and automatic pulse drains
- High flow: 22 SCFM §

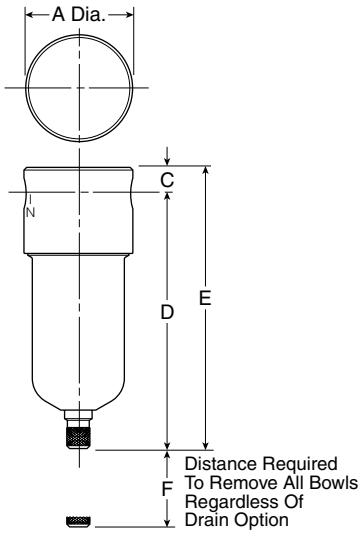


| Port Size | NPT | |
|---|---|---|
| | Twist Drain | Automatic Pulse Drain |
| Polycarbonate Bowl ‡ | | |
| 1/8" | **F504-01AH** | **F504-01AHS** |
| 1/4" | **F504-02AH** | **F504-02AHS** |
| Metal Bowl without Sight Gauge | | |
| 1/8" | **F504-01DH** | **F504-01DHS** |
| 1/4" | **F504-02DH** | **F504-02DHS** |

**Standard part numbers shown bold.**
**For other models refer to ordering information below.**

‡ For polycarbonate bowl see Caution on page inside cover.

§ SCFM = Standard cubic feet per minute at 90 PSIG inlet and 5 PSIG pressure drop.

| F504 Filter Dimensions | | |
|---|---|---|
| **A** 1.56 (39.7) | **C** 0.38 (9.5) | **D** 3.78 (96) |
| **D†** 3.62 (92) | **E** 4.16 (105.6) | **E†** 4.00 (101.6) |
| **F** .75 (77) | **F†** .75 (77) | |

Inches (mm)

† With Metal Bowl

## Ordering Information

| F | 504 | — | 01 | A | H | | /** |
|---|---|---|---|---|---|---|---|

**Port Threads**
- **— NPT**
- G BSPP

**Port Size**
- **01 1/8 Inch**
- **02 1/4 Inch**

**Bowl**
- **A Polycarbonate**
- D Metal

**Elements**
- G 5 Micron
- **H 20 Micron**

**Drains and Options**
- **Blank Manual Twist Drain**
- S Automatic Pulse Drain
- U Semi-Auto Drain
- X11 No Internal Parts
- X33* Polyurethane Bowl
- X64 Fluorocarbon Seals
- X67 With Mounting Bracket

* Add .65" to overall length.

**Engineering Change Designator**
- Will be entered at factory.

**BOLD ITEMS ARE MOST POPULAR.**



**Parker Hannifin Corporation**
Pneumatic Division
Richland, Michigan
www.wattsfluidair.com

## Technical Information

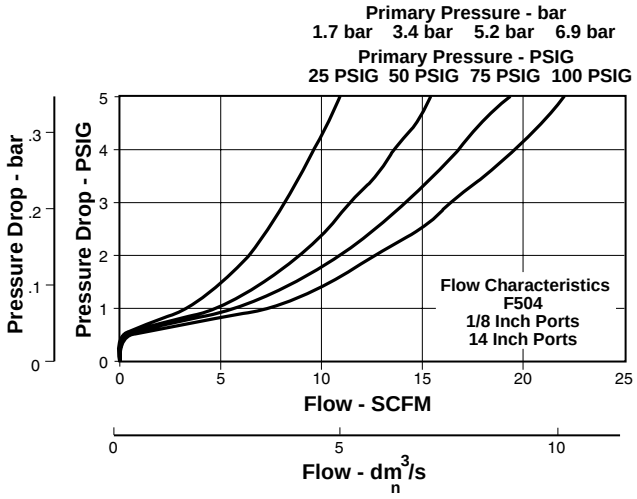


## F504 Filter Kits & Accessories

**Bowl Kits –**
- Metal (D) ..... BK505Y
- Metal (D) with Automatic Pulse Drain ..... BK505SY
- Polycarbonate (A) ..... BK504Y
- Polycarbonate (A) with Automatic Pulse Drain ..... BK504SY

**Drain Kits –**
- Automatic Pulse Drain ..... RK504SY
- Manual Twist Drain ..... SA600Y7-1
- Semi-Automatic "Overnight" Drain ..... SA602A7
  (Drains automatically under zero pressure)

**Filter Element Kits –**
- 5 Micron (All) ..... EK504VY
- 20 Micron (All) ..... EK504Y

**Mounting Bracket Kit** ..... Must be Ordered with Filter

**( ) = BOWL TYPE**

## Specifications

**Bowl Capacity** ..... 1 Ounce

**Port Threads** ..... 1/8, 1/4 Inch

**Pressure & Temperature Ratings –**
- Polycarbonate Bowl ..... 0 to 150 PSIG (0 to 10.2 bar)
  40°F to 125°F (4.4°C to 52°C)
- Metal Bowl ..... 0 to 300 PSIG (0 to 20.4 bar)
  40°F to 180°F (4.4°C to 82.2°C)
- With Automatic Pulse Drain ..... 175 PSIG Max. Press. (11.9 bar)

**Weight**
- Polycarbonate Bowl ..... 0.3 lb. (0.14 kg) / Unit
  7 lb. (3.18 kg) / 24-Unit Master Pack
- Metal Bowl ..... 0.5 lb. (0.23 kg) / Unit
  12 lb. (5.44 kg) / 24-Unit Master Pack

## Materials of Construction

**Body** ..... Aluminum

**Bowls** ..... Polycarbonate
Metal (Zinc)

**Drains** ..... Brass

**Filter Elements** ..... Polypropylene

**Seals** ..... Nitrile



**Parker Hannifin Corporation**
Pneumatic Division
Richland, Michigan
www.wattsfluidair.com

# F602 Filters – Compact

## Features

- Excellent water removal efficiency
- Unique deflector plate and shroud creates a swirling of the air stream ensuring maximum water and dirt separation
- Large filter element surface guarantees low pressure drop and increased element life
- Optional automatic float drain available
- Shown with recommended metal bowl guard
- High flow: 1/4" – 53 SCFM§
  3/8" – 80 SCFM§
  1/2" – 85 SCFM§

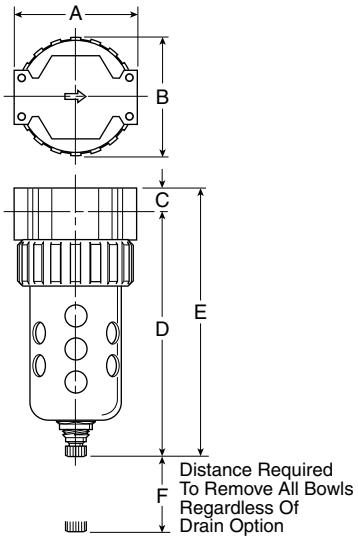


| Port Size | NPT | |
|---|---|---|
| | Twist Drain | Automatic Float Drain |
| Poly Bowl‡ / Metal Guard | | |
| 1/4" | **F602-022A*** | **F602-026A*** |
| 3/8" | **F602-032A*** | **F602-036A*** |
| 1/2" | **F602-042A*** | **F602-046A*** |
| Metal Bowl / Sight Gauge | | |
| 1/4" | **F602-024A*** | **F602-028A*** |
| 3/8" | **F602-034A*** | **F602-038A*** |
| 1/2" | **F602-044A*** | **F602-048A*** |

**Standard part numbers shown bold.**
**For other models refer to ordering information below.**

‡ For polycarbonate bowl see Caution on inside cover.

§ SCFM = Standard cubic feet per minute at 90 PSIG inlet and 5 PSIG pressure drop.

| F602 Filter Dimensions | | | |
|---|---|---|---|
| **A** | **B** | **C** | **D** |
| 2.81 (71) | 2.74 (70) | .53 (13) | 5.69 (145) |
| **D†** | **E** | **E†** | **F** |
| 5.74 (146) | 6.22 (158) | 6.27 (159) | 2.25 (57) |

Inches (mm)

† With Automatic Float Drain

## Ordering Information

| F602 | — | 02 | 2 | A | * | |
|---|---|---|---|---|---|---|

**Port Threads**
- **— NPT**
- G* BSPP

* 1/4 & 3/8 inch meet ISO 1179-1 Standard.

**Port Size**
- **02 1/4 Inch**
- **03 3/8 Inch**
- **04 1/2 Inch**

**Bowl Options**

Polycarbonate Bowl
- **2 Metal Bowl Guard / Twist Drain**
- **6 Metal Bowl Guard / Auto Float Drain**

Metal Bowl
- 3 Twist Drain
- **4 Sight Gauge / Twist Drain**
- 7 Auto Float Drain
- **8 Sight Gauge / Auto Float Drain**

**Element**
- **A 40 Micron**

**Engineering Level**
- * Will be Entered at Factory.

**Options**
- **Blank None**

**BOLD ITEMS ARE MOST POPULAR.**



**Parker Hannifin Corporation**
Pneumatic Division
Richland, Michigan
www.wattsfluidair.com

## Technical Information

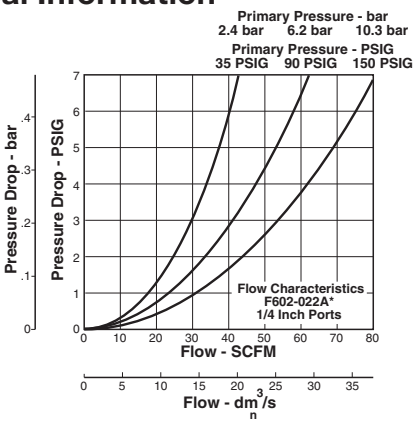


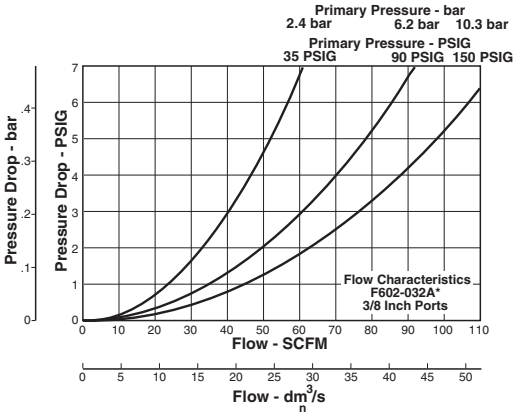


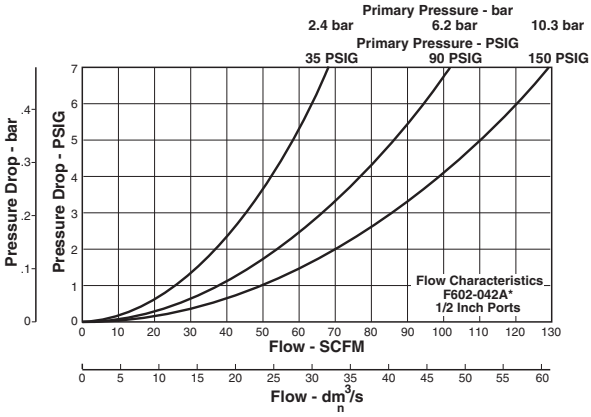


## F602 Filter Kits & Accessories

**Bowl Guard Kit** ..... PS705

**Bowl Kits –**
- Poly Bowl –
  - Automatic Float Drain ..... PS722
  - Twist Drain ..... PS732
- *Polycarbonate (B) (Old F602)* ..... *BK602Y*
- Metal Bowl –
  - Automatic Float Drain ..... PS726
  - Twist Drain ..... PS734
  - Sight Gauge / Automatic Float Drain ..... PS723
  - Sight Gauge / Twist Drain ..... PS735
- *Metal with Sight Gauge (W) (Old F602)* ..... *BK605WY*

**DPI Replacement Kit** ..... PS781

**Drain Kits –**
- Automatic Float Drain ..... PS506
- Twist Drain ..... PS512
- *Internal Auto (All) (Old F602)* ..... *SA602MD*
- *Manual Twist (All) (Old F602)* ..... *SA600Y7-1*

**Filter Element Kits –**
- 40 Micron *(New style units)* ..... PS701

**Mounting Bracket Kit** ..... PS743

***Mounting Bracket Kit*** *(Old F602)* ..... *(All) SAF602-0571*

**Sight Gauge Kit** ..... PS914

## Specifications

**Bowl Capacity** ..... 4.4 Ounces

**Sump Capacity** ..... 1.75 Ounces

**Port Threads** ..... 1/4, 3/8, 1/2 Inch

**Pressure & Temperature Ratings –**

Without Differential Pressure Indicator:
Polycarbonate Bowl – 0 to 150 PSIG (0 to 10.3 bar)
32°F to 125°F (0°C to 52°C)
Metal Bowl – 0 to 250 PSIG (0 to 17.2 bar)
32°F to 175°F (0°C to 80°C)
With Differential Pressure Indicator: 0 to 150 PSIG (0 to 10.3 bar)
32°F to 125°F (0°C to 52°C)
Automatic Float Drain – 15 to 250 PSIG (1.0 to 17.2 bar)

**Weight** ..... 1.4 lb. (0.6 kg)

## Materials of Construction

**Body** ..... Zinc

**Bowls** ..... Transparent Polycarbonate or Metal (Zinc) With or Without Sight Gauge

**Bowl Guards** ..... Steel

**Collar** ..... Plastic

**Deflector, Shroud & Baffle** ..... Plastic

**Drains –**
- Twist Drain – Body & Nut ..... Plastic
- Automatic Float Drain – Housing, Float ..... Plastic
  - Seals ..... Nitrile
  - Springs, Push Rod ..... Stainless Steel

**Filter Elements –**
- 40 Micron (Standard) ..... Plastic
- Adsorber (Optional) ..... Activated Charcoal

**Seals** ..... Nitrile

**Sight Gauge** ..... Nylon



**Parker Hannifin Corporation**
Pneumatic Division
Richland, Michigan
www.wattsfluidair.com

# F602 Filters – Standard

## Features

- Excellent water removal efficiency
- Unique deflector plate and shroud creates a swirling of the air stream ensuring maximum water and dirt separation
- Large filter element surface guarantees low pressure drop and increased element life
- Optional automatic float drain available
- Shown with recommended metal bowl guard
- High flow: 3/4" – 145 SCFM§

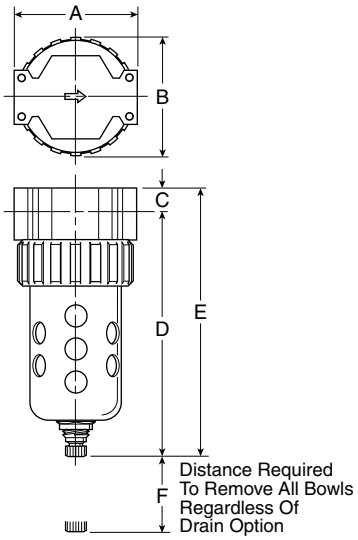


| Port Size | NPT | |
|---|---|---|
| | Twist Drain | Automatic Float Drain |
| Poly Bowl‡ / Metal Guard | | |
| 3/4" | **F602-062A*** | **F602-066A*** |
| Metal Bowl / Sight Gauge | | |
| 3/4" | **F602-064A*** | **F602-068A*** |

**Standard part numbers shown bold.**
**For other models refer to ordering information below.**

‡ For polycarbonate bowl see Caution on inside cover.

§ SCFM = Standard cubic feet per minute at 90 PSIG inlet and 5 PSIG pressure drop.

| F602 Filter Dimensions | | | |
|---|---|---|---|
| **A** | **B** | **C** | **D** |
| 3.24 (82) | 3.25 (83) | .70 (18) | 6.97 (177) |
| **D†** | **E** | **E†** | **F** |
| 7.00 (178) | 7.67 (195) | 7.70 (196) | 2.75 (70) |

Inches (mm)

† With Automatic Float Drain

## Ordering Information

| F602 | — | 06 | 2 | A | * | |
|---|---|---|---|---|---|---|

**Port Threads**
- — **NPT**
- G BSPP

**Port Size**
- **06 3/4 Inch**

**Bowl Options**

| Polycarbonate Bowl | Metal Bowl |
|---|---|
| **2 Metal Bowl Guard / Twist Drain** | 3 Twist Drain |
| **6 Metal Bowl Guard / Auto Float Drain** | **4 Sight Gauge / Twist Drain** |
| | 7 Auto Float Drain |
| | **8 Sight Gauge / Auto Float Drain** |

**Element**
- **A 40 Micron**

**Engineering Level**
- * Will be Entered at Factory.

**Options**
- **Blank None**

**BOLD ITEMS ARE MOST POPULAR.**



**Parker Hannifin Corporation**
Pneumatic Division
Richland, Michigan
www.wattsfluidair.com

## Technical Information

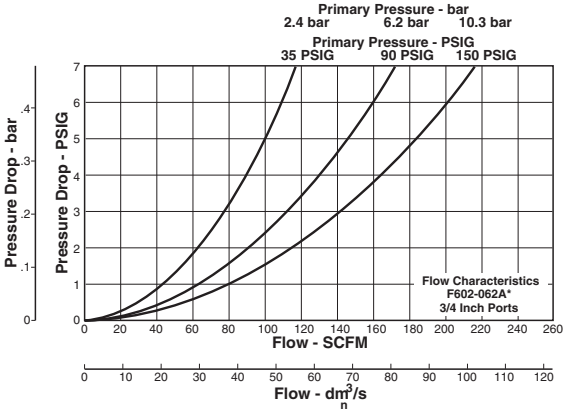


## F602 Filter Kits & Accessories

**Bowl Guard Kit** ..... PS805

**Bowl Kits –**
- Poly Bowl –
  - Automatic Float Drain ..... PS822
  - Twist Drain ..... PS832
- *Polycarbonate with Plastic Bowl Guard (B) (Old F602)* ..... *BK602A*
- Metal Bowl –
  - Automatic Float Drain ..... PS826
  - Twist Drain ..... PS834
  - Sight Gauge / Automatic Drain ..... PS823
  - Sight Gauge / Twist Drain ..... PS835
- *Aluminum (E) (Old F602)* ..... *BK603A*
- *Metal with Sight Gauge (W) (Old F602)* ..... *BK605WA*

**DPI Replacement Kit** ..... PS781

**Drain Kits –**
- Automatic Float Drain ..... PS506
- Twist Drain ..... PS512
- *External Auto (B,W) (Old F602)* ..... *SA602D*
- *External Auto (E) (Old F602)* ..... *SA603D*
- *Internal Auto (All) (Old F602)* ..... *SA602MD*
- *Manual Twist (All) (Old F602)* ..... *SA600Y7-1*

**Filter Element Kits –**
- 40 Micron *(New style units)* ..... PS801

**Mounting Bracket Kit** ..... PS843

***Mounting Bracket Kit*** *(Old F602)* ..... *(All) SAF602-0572*

**Sight Gauge Kit** ..... PS914

## Specifications

**Bowl Capacity** ..... 7.2 Ounces

**Sump Capacity** ..... 2.8 Ounces

**Port Threads** ..... 1/2, 3/4 Inch

**Pressure & Temperature Ratings –**

Without Differential Pressure Indicator:

Polycarbonate Bowl – 0 to 150 PSIG (0 to 10.3 bar)
32°F to 125°F (0°C to 52°C)

Metal Bowl – 0 to 250 PSIG (0 to 17.2 bar)
32°F to 175°F (0°C to 80°C)

With Differential Pressure Indicator: 0 to 150 PSIG (0 to 10.3 bar)
32°F to 125°F (0°C to 52°C)

Automatic Float Drain – 15 to 250 PSIG (1.0 to 17.2 bar)

**Weight** ..... 2.2 lb. (1.0 kg)

## Materials of Construction

**Body** ..... Zinc

**Bowls** ..... Transparent Polycarbonate
Metal (Zinc) With or Without Sight Gauge

**Bowl Guards** ..... Steel

**Collar** ..... Plastic or Metal

**Deflector, Shroud & Baffle** ..... Plastic

**Drains –**
- Twist Drain – Body & Nut ..... Plastic
- Automatic Float Drain –
  - Housing, Float ..... Plastic
  - Seals ..... Nitrile
  - Springs, Push Rod ..... Stainless Steel

**Filter Elements –**
- 40 Micron (Standard) ..... Plastic
- Adsorber (Optional) ..... Activated Charcoal

**Seals** ..... Nitrile

**Sight Gauge** ..... Nylon



**Parker Hannifin Corporation**
Pneumatic Division
Richland, Michigan
www.wattsfluidair.com

# F602 Filters – Hi-Flow

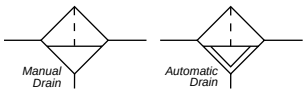

## Features

- Excellent water removal efficiency
- For heavy duty applications with minimum pressure drop requirement
- Unique deflector plate that creates swirling of the air stream ensuring maximum water and dirt separation
- Large filter element surface guarantees low pressure drop and increased element life
- 40 micron filter element standard, 5 micron available
- Metal bowl with sight gauge standard
- Twist drain as standard, optional auto drain
- Large bowl capacity
- Optional high capacity bowl(s) available
- High flow: 3/4" – 270 SCFM§
  1" – 300 SCFM§

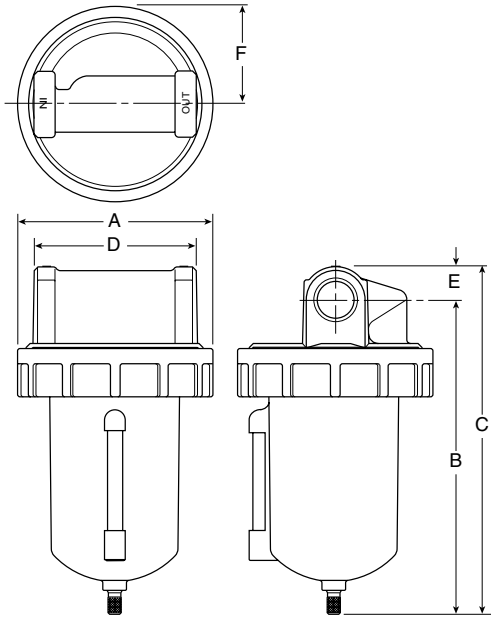


| Port Size | NPT | |
|---|---|---|
| | Twist Drain | Automatic Pulse Drain |
| Metal Bowl / Sight Gauge - 16 oz. | | |
| 3/4" | **F602-06WJ** | **F602-06WJR** |
| 1" | **F602-08WJ** | **F602-08WJR** |
| Metal Bowl without Sight Gauge - 32 oz. | | |
| 3/4" | **F602-06EJ** | **F602-06EJR** |
| 1" | **F602-08EJ** | **F602-08EJR** |

**Standard part numbers shown bold.**
For other models refer to ordering information below.
§ SCFM = Standard cubic feet per minute at 90 PSIG inlet and 5 PSIG pressure drop.

| F602 Filter Dimensions | | | | | |
|---|---|---|---|---|---|
| A | B | C | D | E | F |
| **F602-06W, F602-08W** | | | | | |
| 4.90 (124) | 7.88 (200) | 8.72 (221) | 4.06 (103) | .84 (21) | 2.45 (62) |
| **F602-06E, F602-08E** | | | | | |
| 4.90 (124) | 11.10 (282) | 11.94 (303) | 4.06 (103) | .84 (21) | 2.45 (62) |

inches (mm)

## Ordering Information

| F | 602 | — | 06 | W | J | | /** |
|---|---|---|---|---|---|---|---|

**Port Threads**
- **— NPT**
- G BSPP

**Port Size**
- **06 3/4 Inch**
- **08 1 Inch**

**Bowl**
- **E 32 oz. Large Capacity Metal without Sight Gauge**
- **W 16 oz. Metal with Sight Gauge**

**Element**
- G 5 Micron
- **J 40 Micron**

**Drains and Options**
- **Blank Manual Twist Drain**
- Q External Heavy Duty Auto Drain
- **R Internal Auto Drain**

**Engineering Level**
- * Will be Entered at Factory.

**BOLD ITEMS ARE MOST POPULAR.**



**Parker Hannifin Corporation**
Pneumatic Division
Richland, Michigan
www.wattsfluidair.com

## Technical Information

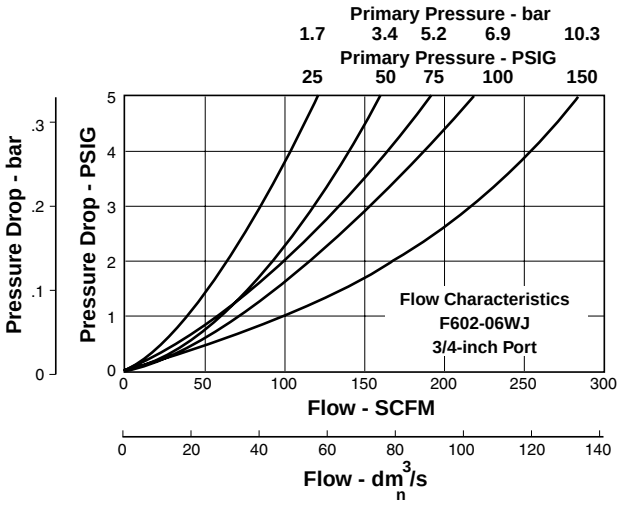


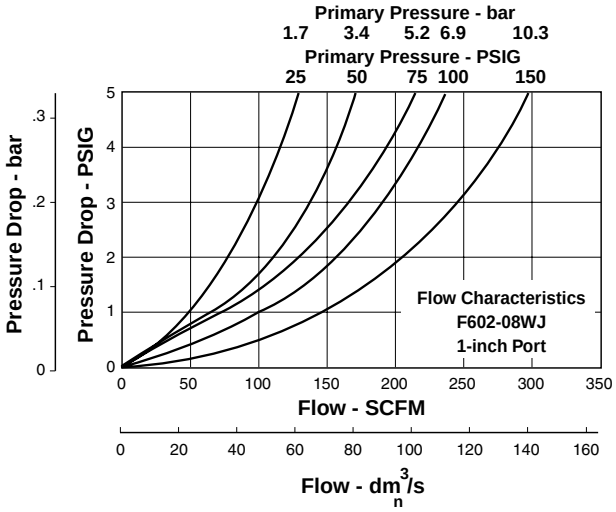


**"Q" Option External Heavy Duty Auto Drain SA602D / SA603D**
For heavy duty applications where the filter is being used to remove large volumes of liquid and/or particulate matter from the airstream, the external automatic drain ("Q" option) should be used.

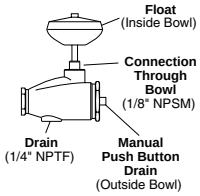


## F602 Filter Kits & Accessories

**Bowl Kits –**
Aluminum (E) ..... BK603B
Zinc with Sight Gauge (W) ..... BK605WB

**Drain Kits –**
External Auto (E) ..... SA603D
External Auto (W) ..... SA602D
Internal Auto (All) ..... SA602MD
Manual (All) ..... SA600Y7-1
Semi-Automatic "Overnight" Drain ..... SA602A7
(Drains automatically under zero pressure)

**Filter Element Kits –**
40 Micron (All) ..... EK602B
5 Micron (All) ..... EK602VB

**Mounting Bracket Kit**
**(Pair or 2 Kits Pipe Mounted Brackets needed) –**
(3/4" Unit) ..... SA200AW57
(1" Unit) ..... SA200CW57

**Repair Kits –**
Deflector, Baffle Assembly, and Retaining Rod (E,W) ..... RK602B
External Auto Drain (All) ..... RK602D
Internal Auto Drain (All) ..... RK602MD
Metal Bowl Sight Gauge (W) ..... RKB605WB

## Specifications

**Bowl Capacity –**
Aluminum Bowl (E) ..... 32 Ounces
Zinc Bowl (W) ..... 16 Ounces

**Port Threads** ..... 3/4, 1 Inch

( ) = Bowl Type

**Pressure & Temperature Ratings –**
Aluminum Bowl (E) ..... 0 to 300 PSIG (0 to 20.4 bar)
40°F to 150°F (4.4°C to 65.6°C)
Zinc (W) ..... 0 to 250 PSIG (0 to 17.2 bar)
40°F to 150°F (4.4°C to 65.6°C)
With Internal Auto Drain (R) ..... 20 to 175 PSIG (1.4 to 11.9 bar)
40°F to 125°F (4.4°C to 52°C)
With External Auto Drain (Q) ..... 30 to 250 PSIG (0 to 17.2 bar)
40°F to 150°F (4.4°C to 65.6°C)

**Weight –**
Aluminum Bowl (E) ..... 7 lb. (3.18 kg) / Unit
28 lb. (12.70 kg) / 4-Unit Master Pack
Zinc Bowl (W) ..... 6.3 lb. (2.86 kg) / Unit
25 lb. (11.34 kg) / 4-Unit Master Pack

## Materials of Construction

**Body** ..... Zinc

**Bowls –**
(E) ..... Aluminum without Sight Gauge
(W) ..... Zinc with Sight Gauge

**Drain –**
Manual Twist & Overnight ..... Brass
Housing "R" ..... Acetal
Housing "Q" ..... Bronze

**Filter Elements –**
40 Micron (Standard) ..... Polypropylene
5 Micron (Optional) ..... Polypropylene

**Seals** ..... Nitrile

**Sight Gauge** ..... Nylon



**Parker Hannifin Corporation**
Pneumatic Division
Richland, Michigan
www.wattsfluidair.com

# F602 Filters – Hi-Flow

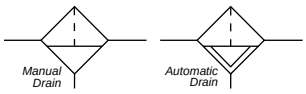

## Features

- Excellent water removal efficiency
- For heavy duty applications with minimum pressure drop requirement
- Unique deflector plate that creates swirling of the air stream ensuring maximum water and dirt separation
- Large filter element surface guarantees low pressure drop and increased element life
- 40 micron filter element standard, 5 micron available
- Metal bowl with sight gauge standard
- Twist drain as standard, optional auto drain
- Large bowl capacity
- Optional high capacity bowl(s) available
- High flow: 1-1/4" – 390 SCFM§
  1-1/2" – 450 SCFM§

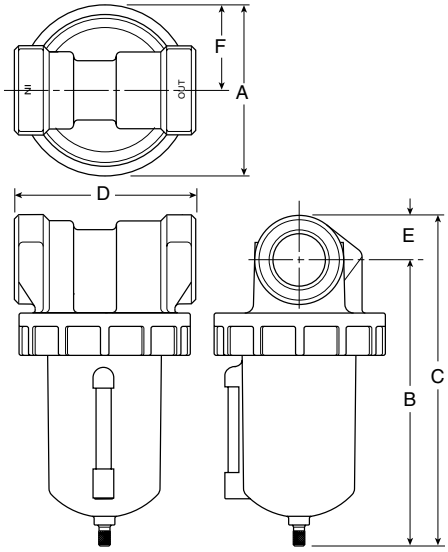


| Port Size | NPT | |
|---|---|---|
| | Twist Drain | Automatic Pulse Drain |
| Metal Bowl / Sight Gauge - 16 oz. | | |
| 1-1/4" | **F602-10WJ** | **F602-10WJR** |
| 1-1/2" | **F602-12WJ** | **F602-12WJR** |
| Metal Bowl without Sight Gauge - 32 oz. | | |
| 1-1/4" | **F602-10EJ** | **F602-10EJR** |
| 1-1/2" | **F602-12EJ** | **F602-12EJR** |

**Standard part numbers shown bold.**
For other models refer to ordering information below.
§ SCFM = Standard cubic feet per minute at 90 PSIG inlet and 5 PSIG pressure drop.

| F602 Filter Dimensions | | | | | |
|---|---|---|---|---|---|
| A | B | C | D | E | F |
| **F602-10W, F602-12W** | | | | | |
| 4.90 (124) | 8.18 (208) | 9.46 (240) | 5.19 (132) | 1.28 (32.4) | 2.45 (62.2) |
| **F602-10E, F602-12E** | | | | | |
| 4.90 (124) | 11.41 (290) | 12.69 (322) | 5.19 (132) | 1.28 (32.4) | 2.45 (62.2) |

inches (mm)

## Ordering Information

| F | 602 | — | 10 | W | J | | /** |
|---|---|---|---|---|---|---|---|

**Port Threads**
- **— NPT**
- G BSPP

**Port Size**
- **10 1-1/4 Inch**
- **12 1-1/2 Inch**

**Bowl**
- **E 32 oz. Large Capacity Metal without Sight Gauge**
- **W 16 oz. Metal with Sight Gauge**

**Element**
- G 5 Micron
- **J 40 Micron**

**Drains and Options**
- **Blank Manual Twist Drain**
- Q External Heavy Duty Auto Drain
- **R Internal Auto Drain**

**Engineering Level**
- * Will be Entered at Factory.

**BOLD ITEMS ARE MOST POPULAR.**



**Parker Hannifin Corporation**
Pneumatic Division
Richland, Michigan
www.wattsfluidair.com

## Technical Information

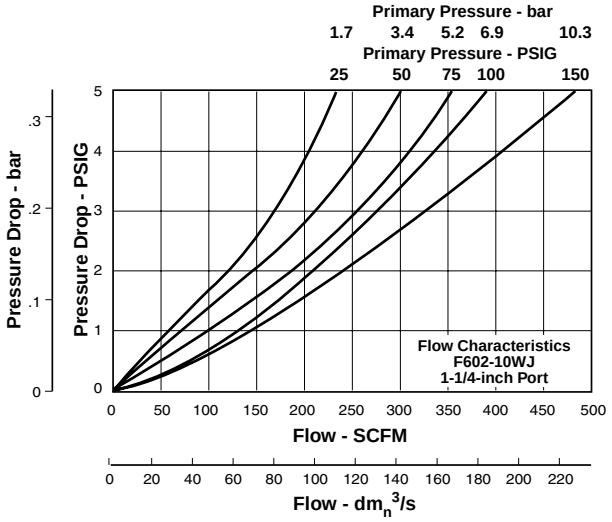


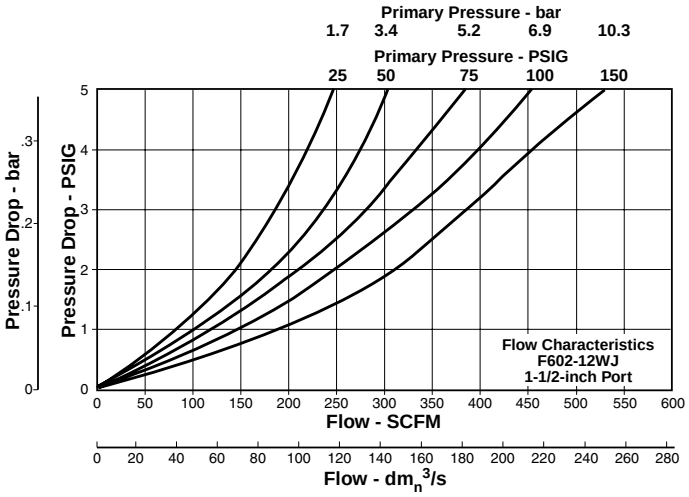


**"Q" Option External Heavy Duty Auto Drain SA602D / SA603D**
For heavy duty applications where the filter is being used to remove large volumes of liquid and/or particulate matter from the airstream, the external automatic drain ("Q" option) should be used.

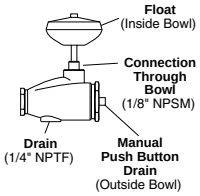


## F602 Filter Kits & Accessories

**Bowl Kits –**
- Aluminum (E) ..... BK603B
- Zinc with Sight Gauge (W) ..... BK605WB

**Drain Kits –**
- External Auto (E) ..... SA603D
- External Auto (W) ..... SA602D
- Internal Auto (All) ..... SA602MD
- Manual (All) ..... SA600Y7-1
- Semi-Automatic "Overnight" Drain ..... SA602A7
  (Drains automatically under zero pressure)

**Filter Element Kits –**
- 40 Micron (All) ..... EK602B
- 5 Micron (All) ..... EK602VB

**Repair Kits –**
- Deflector, Baffle Assembly, and Retaining Rod (All) ..... RK602C
- External Auto Drain (All) ..... RK602D
- Internal Auto Drain (All) ..... RK602MD
- Metal Bowl Sight Gauge (W) ..... RKB605WB

## Specifications

**Bowl Capacity –**
- Aluminum (E) ..... 32 Ounces
- Zinc (W) ..... 16 Ounces

**Port Threads** ..... 1-1/4, 1-1/2 Inch

( ) = Bowl Type

**Pressure & Temperature Ratings –**
- Aluminum Bowl (E) ..... 0 to 300 PSIG (0 to 20.4 bar)
  40°F to 150°F (4.4°C to 65.6°C)
- Zinc (W) ..... 0 to 250 PSIG (0 to 17.2 bar)
  40°F to 150°F (4.4°C to 65.6°C)
- With Internal Auto Drain (R) ..... 20 to 175 PSIG (1.4 to 11.9 bar)
  40°F to 125°F (4.4°C to 52°C)
- With External Auto Drain (Q) ..... 30 to 250 PSIG (0 to 17.2 bar)
  40°F to 150°F (4.4°C to 65.6°C)

**Weight –**
- Aluminum Bowl (E) ..... 7.7 lb. (3.49 kg) / Unit
  31 lb. (14.06 kg) / 4-Unit Master Pack
- Zinc Bowl (W) ..... 7 lb. (3.18 kg) / Unit
  28 lb. (12.70 kg) / 4-Unit Master Pack

## Materials of Construction

**Body** ..... Zinc

**Bowls –**
- (E) ..... Aluminum without Sight Gauge
- (W) ..... Zinc with Sight Gauge

**Drain –**
- Manual Twist & Overnight ..... Brass
- Housing "R" ..... Acetal
- Housing "Q" ..... Bronze

**Filter Elements –**
- 40 Micron (Standard) ..... Polypropylene
- 5 Micron (Optional) ..... Polypropylene

**Seals** ..... Nitrile

**Sight Gauge** ..... Nylon



**Parker Hannifin Corporation**
Pneumatic Division
Richland, Michigan
www.wattsfluidair.com

# F602 Filters – Hi-Flow

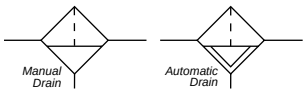

## Features

- Excellent water removal efficiency
- For heavy duty applications with minimum pressure drop requirement
- Unique deflector plate that creates swirling of the air stream ensuring maximum water and dirt separation
- Large filter element surface guarantees low pressure drop and increased element life
- 40 micron filter element standard
- Metal bowl with sight gauge standard
- Twist drain as standard, optional auto drain
- Large bowl capacity
- Optional high capacity bowl(s) available
- High flow: 2 & 2-1/2" – 1200 SCFM§

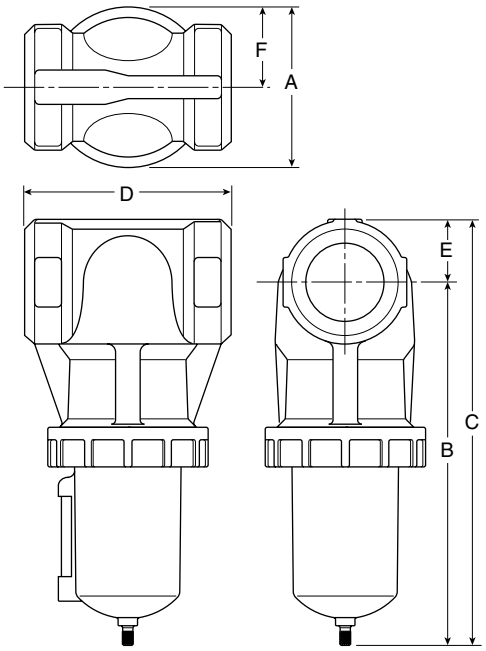


| Port Size | NPT | |
|---|---|---|
| | Twist Drain | Automatic Pulse Drain |
| Metal Bowl / Sight Gauge - 16 oz. | | |
| 2" | **F602-16WJ** | **F602-16WJR** |
| 2-1/2" | **F602-20WJ** | **F602-20WJR** |
| Metal Bowl without Sight Gauge - 32 oz. | | |
| 2" | **F602-16EJ** | **F602-16EJR** |
| 2-1/2" | **F602-20EJ** | **F602-20EJR** |

**Standard part numbers shown bold.**
For other models refer to ordering information below.

§ SCFM = Standard cubic feet per minute at 90 PSIG inlet and 5 PSIG pressure drop.

| F602 Filter Dimensions | | | | | |
|---|---|---|---|---|---|
| A | B | C | D | E | F |
| **F602-16W, F602-20W** | | | | | |
| 4.90 (124) | 11.08 (281) | 13.00 (330) | 6.30 (160) | 1.92 (48.7) | 2.45 (62.2) |
| **F602-16E, F602-20E** | | | | | |
| 4.90 (124) | 14.31 (364) | 16.23 (412) | 6.30 (160) | 1.92 (48.7) | 2.45 (62.2) |

inches (mm)

## Ordering Information

| F | 602 | — | 16 | W | J | | /** |
|---|---|---|---|---|---|---|---|

**Port Threads**
- **— NPT**
- G BSPP

**Port Size**
- **16 2 Inch**
- **20 2-1/2 Inch**

**Bowl**
- **E 32 oz. Large Capacity Metal without Sight Gauge**
- **W 16 oz. Metal with Sight Gauge**

**Element**
- **J 40 Micron**

**Drains and Options**
- **Blank Manual Twist Drain**
- Q External Heavy Duty Auto Drain
- **R Internal Auto Drain**

**Engineering Level**
- * Will be Entered at Factory.

**BOLD ITEMS ARE MOST POPULAR.**



**Parker Hannifin Corporation**
Pneumatic Division
Richland, Michigan
www.wattsfluidair.com

## Technical Information

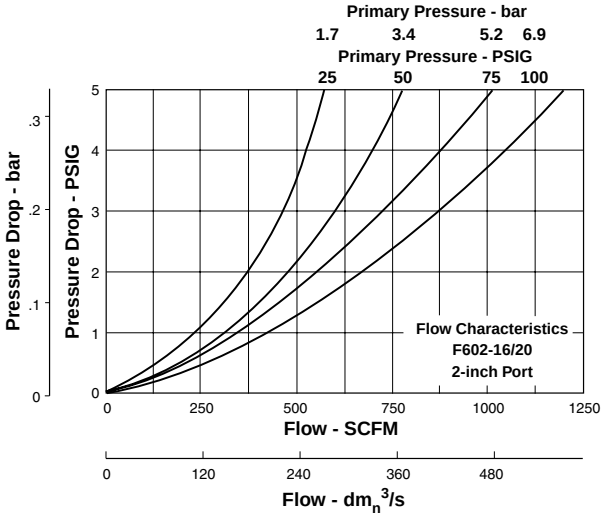


**"Q" Option External Heavy Duty Auto Drain SA602D / SA603D**
For heavy duty applications where the filter is being used to remove large volumes of liquid and/or particulate matter from the airstream, the external automatic drain ("Q" option) should be used.

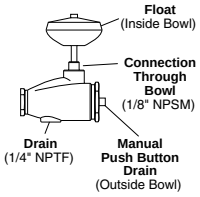


## F602 Filter Kits & Accessories

**Bowl Kits –**
Aluminum (E) ..... BK603B
Zinc with Sight Gauge (W) ..... BK605WB

**Drain Kits –**
External Auto (E) ..... SA603D
External Auto (W) ..... SA602D
Internal Auto (All) ..... SA602MD
Manual (All) ..... SA600Y7-1
Semi-Automatic "Overnight" Drain ..... SA602A7
(Drains automatically under zero pressure)

**Filter Element Kits –**
40 Micron (All) ..... EK602B

**Repair Kits –**
Deflector, Baffle Assembly, and Retaining Rod (All) ..... RK602C
External Auto Drain (All) ..... RK602D
Internal Auto Drain (All) ..... RK602MD
Metal Bowl Sight Gauge (W) ..... RKB605WB

## Specifications

**Bowl Capacity –**
Aluminum (E) ..... 32 Ounces
Zinc (W) ..... 16 Ounces

**Port Threads** ..... 2, 2-1/2 Inch

( ) = Bowl Type

**Pressure & Temperature Ratings –**
Aluminum Bowl (E) ..... 0 to 300 PSIG (0 to 20.4 bar)
40°F to 150°F (4.4°C to 65.6°C)
Zinc (W) ..... 0 to 250 PSIG (0 to 17.2 bar)
40°F to 150°F (4.4°C to 65.6°C)
With Internal Auto Drain (R) ..... 20 to 175 PSIG (1.4 to 11.9 bar)
40°F to 125°F (4.4°C to 52°C)
With External Auto Drain (Q) ..... 30 to 250 PSIG (0 to 17.2 bar)
40°F to 150°F (4.4°C to 65.6°C)

**Weight –**
Aluminum Bowl (E) ..... 10.3 lb. (4.67 kg) / Unit
11 lb. (4.99 kg) / 1-Unit Master Pack
Zinc Bowl (W) ..... 9.8 lb. (4.45 kg) / Unit
39 lb. (17.69 kg) / 4-Unit Master Pack

## Materials of Construction

**Body** ..... Aluminum

**Bowls –**
(E) ..... Aluminum without Sight Gauge
(W) ..... Zinc with Sight Gauge

**Drain –**
Manual Twist & Overnight ..... Brass
Housing "R" ..... Acetal
Housing "Q" ..... Bronze

**Filter Elements –**
40 Micron (Standard) ..... Polypropylene

**Seals** ..... Buna N

**Sight Gauge** ..... Nylon



**Parker Hannifin Corporation**
Pneumatic Division
Richland, Michigan
www.wattsfluidair.com

# 35F, 43F Filters – Hi-Flow

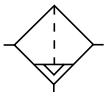

Auto Drain

## Features

- Heavy-duty cast aluminum housings to withstand operating pressures up to 250 PSIG*
- Differential pressure indicator to eliminate the guesswork of element replacement
- Differential pressure gauge available, order separately, Kit DP3-01-000
- Unique drain mounting plate design offers a trouble-free method for interchanging and installing external drains
- High flow: 1-1/2" – 1280 SCFM§
  2" – 1400 SCFM§
  3" – 2900 SCFM§

* Without Differential Pressure Indicator – Max. supply pressure is 250 PSIG (20.7 bar).

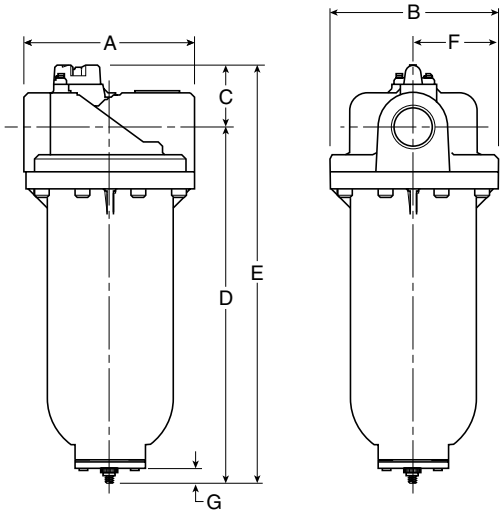


| Series | Port Size | Element Type | Part Number (NPT) Automatic Drain |
|---|---|---|---|
| 35F | 1-1/2 | 5 micron | **35F77BAP** |
| | 2 | 5 micron | **35F87BAP** |
| 43F | 3 | 5 micron | **43FN7BAP** |

**Standard part numbers shown bold.**
For other models refer to ordering information below.

§ SCFM = Standard cubic feet per minute at 90 PSIG inlet and 5 PSIG pressure drop.

| 35F Filter Dimensions | | | | | | |
|---|---|---|---|---|---|---|
| **A** | **B** | **C** | **D** | **E** | **F** | **G** |
| 7.80 (198) | 7.75 (197) | 2.81 (71) | 16.24 (412.5) | 19.07 (484) | 3.88 (98.6) | .55 (14) |
| **43F Filter Dimensions** | | | | | | |
| **A** | **B** | **C** | **D** | **E** | **F** | **G** |
| 8.94 (227) | 8.88 (225.5) | 3.48 (88) | 25.96 (659.4) | 29.44 (748) | 4.44 (112.8) | .55 (14) |

inches (mm)

## Ordering Information

| 35F | 7 | 7 | B | A | P | |
|---|---|---|---|---|---|---|

**Port Size**
- 35F
- 7 1-1/2 Inch
- 8 2 Inch
- 43F
- N 3 Inch

**Bowl**
- 7 Metal without Sight Gauge, Auto Float Drain

**Element**
- B 5 Micron

**Engineering Level**
- A

**Options**
- N Without Differential Pressure Indicator
- P* With Differential Pressure Indicator
- G** With Differential Pressure Gauge

**Port Threads**
- Blank NPT
- 1 BSPP
- 2 BSPT

* Max. pressure rating 150 PSIG.
** Gauge ships loose.

**BOLD ITEMS ARE MOST POPULAR.**



**Parker Hannifin Corporation**
Pneumatic Division
Richland, Michigan
www.wattsfluidair.com

## Technical Information

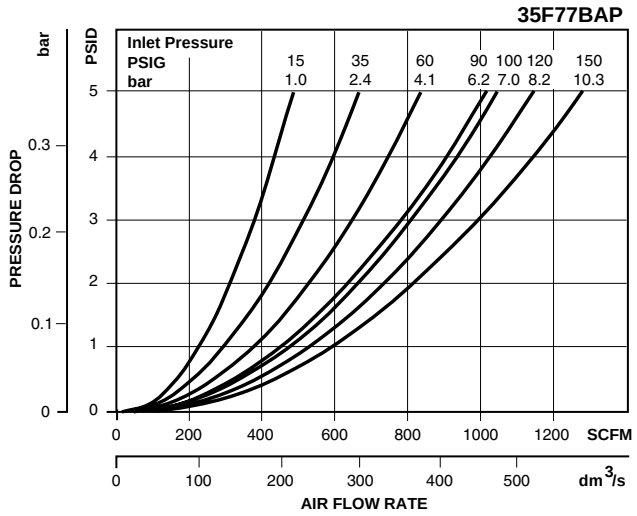


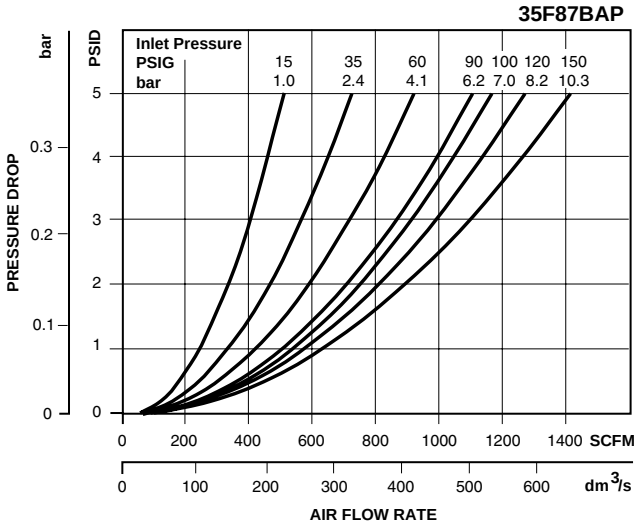


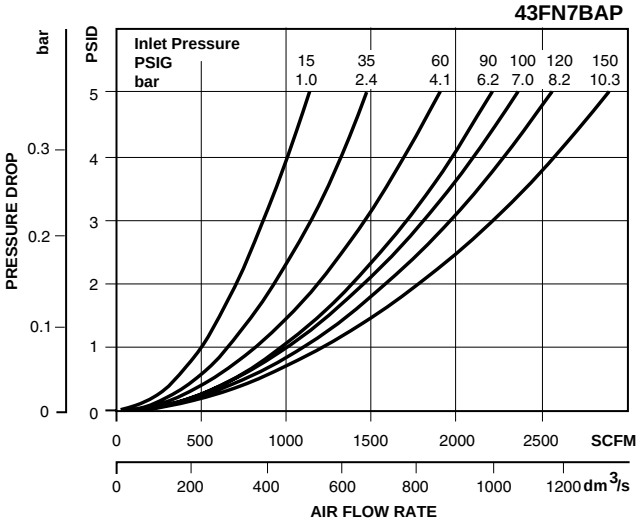


## 35F & 43F Filter Kits & Accessories

**Differential Pressure Indicator Cap –**
For pressures over 150 PSIG ..... GRP-95-022

**Differential Pressure Gauge** ..... DP3-01-000

**Differential Pressure Indicator** ..... DP2-02-001

**Drain, Automatic, Internal, Fluorocarbon –**
1/8 NPT ..... GRP-95-981

**Drain Plate Kit –**
1/2 NPT Tapped Drain Port ..... GRP-95-393

**Element –**
35F, 5 Micron ..... FRP-95-505
43F, 5 Micron ..... FRP-95-508

**Manual Drain Kit**
with 1/2" Drain Plate ..... GRP-95-392

## Specifications

**Maximum Supply Pressure –**
without DPI and with Pressure Gauge ..... 250 PSIG (17.2 bar)*
with DPI ..... 150 PSIG (10.3 bar)

**Operating Temperature** ..... 32° to 150°F (0° to 65.5°C)

**Port Size –**
35F ..... 1-1/2, 2 Inch
43F ..... 3 Inch

**Standard Filtration** ..... 5 Micron

**Weight –**
35F ..... 19.3 lb. (8.7 kg)
43F ..... 32.8 lb. (14.9 kg)

* Without pressure indicator

## Materials of Construction

**Baffle** ..... Plated Steel

**Body** ..... Aluminum

**Bowls** ..... Aluminum

**Deflector** ..... Plated Steel

**Element Retainer** ..... Plated Steel

**Filter Element** ..... Polyethylene

**Seals** ..... Fluorocarbon

**Stud** ..... Plated Steel



**Parker Hannifin Corporation**
Pneumatic Division
Richland, Michigan
www.wattsfluidair.com

# 10F Coalescing Filters – Miniature

## Features

- Removes liquid aerosols and sub-micron particles
- Liquids gravitate to the bottom of the element and will not re-enter the airstream
- Oil free air for critical applications, such as air gauging and pneumatic instrumentation and controls
- Interchangeable twist and automatic pulse drains
- Grade 6 element, 99.97% DOP efficiency
- High flow:
  grade 6 element
  1/8" – 17 SCFM §
  1/4" – 20 SCFM §
  Grade 10 element
  1/8" – 19 SCFM §
  1/4" – 24 SCFM §

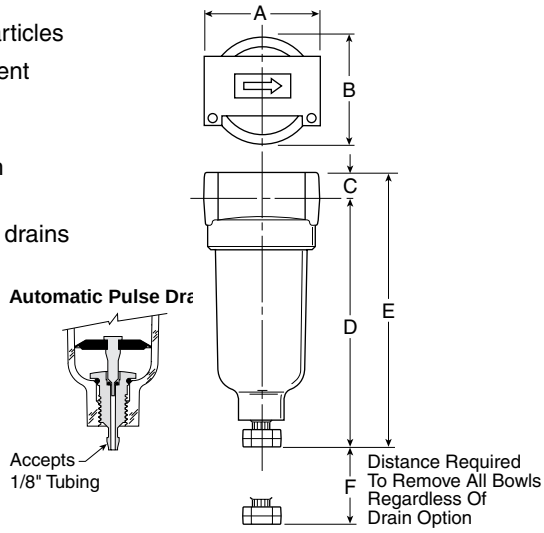


| Port Size | NPT | |
|---|---|---|
| | Twist Drain | Automatic Pulse Drain |
| Poly Bowl ‡ | | |
| 1/8" | **10F01E*** | **10F05E*** |
| 1/4" | **10F11E*** | **10F15E*** |
| Metal Bowl without Sight Gauge | | |
| 1/8" | **10F03E*** | **10F07E*** |
| 1/4" | **10F13E*** | **10F17E*** |

**Standard part numbers shown bold, with Grade 6 Elements (for Grade 10 Elements, replace "E" with "H" in the 6th position). For other models refer to ordering information below.**

‡ For polycarbonate bowl see Caution on page inside cover.

§ SCFM = Standard cubic feet per minute at 90 PSIG inlet and 5 PSIG pressure drop.

| 10F Coalescing Filter Dimensions | | |
|---|---|---|
| **A** 1.69 (43) | **B** 1.56 (39,6) | **C** .39 (10) |
| **D** 3.82 (97) | **D†** 3.67 (93) | **E** 4.21 (107) |
| **E†** 4.06 (103) | **F** 1.60 (41) | |

Inches (mm)

† With Automatic Pulse Drain.

## Ordering Information

| 10F | 1 | 1 | E | * | |
|---|---|---|---|---|---|

**Port Size**
- **0 1/8 Inch**
- **1 1/4 Inch**

**Bowl Options**
- Polycarbonate Bowl
- **1 Twist Drain**
- **5 Automatic Pulse Drain**
- Metal Bowl
- **3 Twist Drain**
- **7 Automatic Pulse Drain**

**Elements**
- **E Grade 6**
- H Grade 10

**Engineering Level**
- * Will be Entered at Factory

**Port Type**

| Blank | NPT |
|---|---|
| 1 | BSPP |
| 2 | BSPT |

**BOLD ITEMS ARE MOST POPULAR.**



**Parker Hannifin Corporation**
Pneumatic Division
Richland, Michigan
www.wattsfluidair.com

## Technical Information

### Grade 6

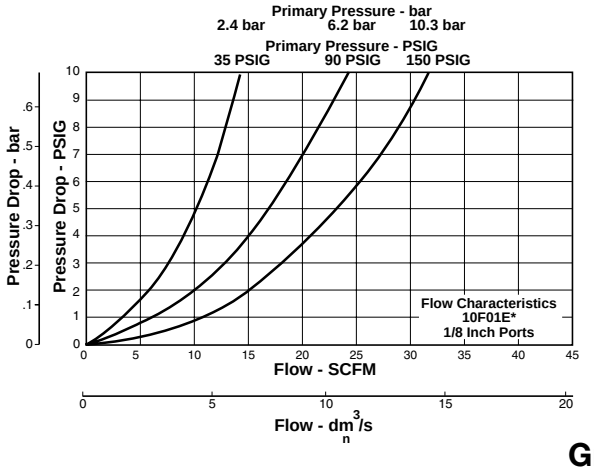


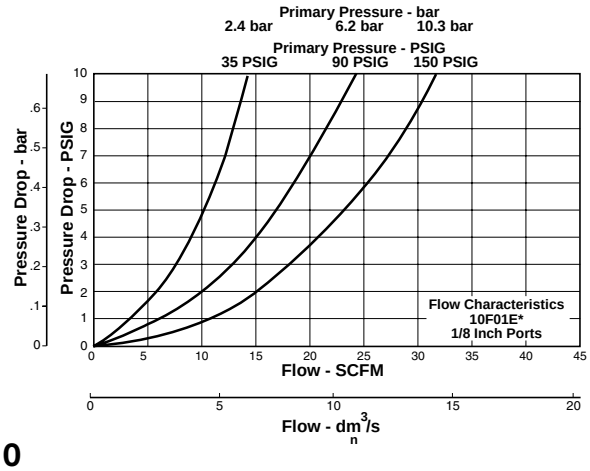


### Grade 10

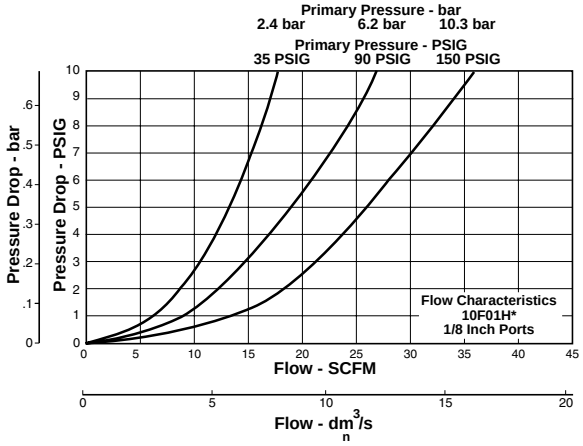


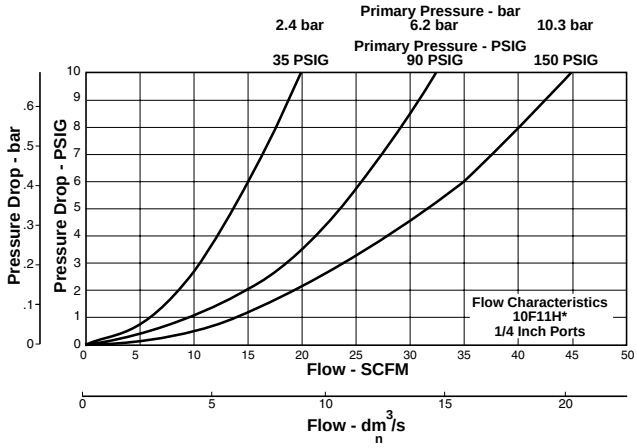


## 10F Coalescing Filter Kits & Accessories

**Bowl Kits –**
- Poly Bowl –
  - Automatic Pulse Drain ..... PS408B
  - Twist Drain ..... PS404
- Metal Bowl –
  - Automatic Pulse Drain ..... PS451B
  - Twist Drain ..... PS447B

**Filter Element Kits –**
- Grade 6 (Standard) ..... PS446
- Grade 10 (Optional) ..... PS456

**Mounting Bracket Kit** ..... PS417B

## Specifications

**Automatic Pulse Drain Tube Barb** ..... 1/8 Inch

**Bowl Capacity** ..... 1 Ounce

**Operation –**
- Normal Operating Pressure Drop ..... 2 PSIG
- Maximum Recommended Pressure Drop ..... 10 PSIG
- (Element should be replaced)

**Port Threads** ..... 1/8, 1/4 Inch

**Pressure & Temperature Ratings –**
- Polycarbonate Bowl – ..... 0 to 150 PSIG (0 to 10.3 bar)
  32°F to 125°F (0°C to 52°C)
- Metal Bowl – ..... 0 to 250 PSIG (0 to 17.2 bar)
  32°F to 175°F (0°C to 80°C)

**Weight** ..... 0.41 lb. (0.18 kg)

## Materials of Construction

**Body** ..... Zinc

**Bowls –**
- Transparent ..... Polycarbonate
- Metal ..... Zinc Without Sight Gauge

**Drains –**
- Twist Drain –
  - Body & Stem ..... Plastic
  - Seals ..... Nitrile
- Automatic Pulse Drain –
  - Piston & Seals ..... Nitrile
  - Stem, Seat, Adaptor & Washers ..... Aluminum

**Element Holder** ..... Plastic

**Filter Element** .... Borosilicate & felt glass fibers 99.97% DOP efficiency
- Largest Aerosol Particle Passed (Grade 6) ..... 0.75 Micron
- Largest Solid Particle Passed (Grade 6) ..... 0.30 Micron

**Seals** ..... Nitrile

## Media Specifications

| Grade | D.O.P. Coalescing Efficiency 0.3 to 0.6 Micron Particles | Maximum Oil Carryover[1] PPM w/w | Pressure Drop (PSID)[2] @ Rated Flow | | Particulate Micron Rating |
|---|---|---|---|---|---|
| | | | Media Dry | Media Wet With 10-20 wt. oil | |
| 6 | 99.97% | 0.008 | 1.0 | 2-3 | 0.01 |
| 10 | 95% | 0.85 | 0.5 | 0.5 | 0.7 |

[1] Tested per BCAS 860900 at 40 ppm inlet.
[2] Add dry + wet for total pressure drop.
D.O.P. = Dioctylphthalate



**Parker Hannifin Corporation**
Pneumatic Division
Richland, Michigan
www.wattsfluidair.com

# F501, F507 Coalescing Filters – Miniature

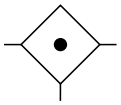

## Features

- Removes liquid aerosols and sub-micron particles
- Liquids gravitate to the bottom of the element and will not re-enter the airstream
- Oil free air for critical applications, such as air gauging and pneumatic instrumentation and controls
- Interchangeable twist and automatic pulse drains
- Grade 6 element, 99.97% DOP efficiency
- High flow: Grade 6 element – 8 SCFM §
  Grade 10 element – 10 SCFM §

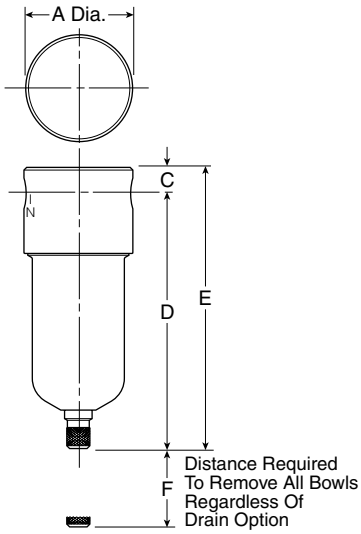


| Port Size | NPT | |
|---|---|---|
| | Grade 6 | Grade 10 |
| Polycarbonate Bowl, Manual Twist Drain ‡ | | |
| 1/8" | **F501-01AH** | **F507-01AO** |
| 1/4" | **F501-02AH** | **F507-02AO** |
| Metal Bowl without Sight Gauge, Manual Twist Drain | | |
| 1/8" | **F501-01DH** | **F507-01DO** |
| 1/4" | **F501-02DH** | **F507-02DO** |

**Bold Items are Most Popular.**
**For other models refer to ordering information below.**

‡ For polycarbonate bowl see Caution on page inside cover.

§ SCFM = Standard cubic feet per minute at 100 PSIG inlet and1.0 PSIG Grade 6, .5 PSIG Grade 10 pressure drop.

| F501 / F507 Coalescing Filter Dimensions | | |
|---|---|---|
| **A** 1.56 (39.7) | **B** .038 (9.5) | **D** 3.78 (96) |
| **D†** 3.62 (92) | **E** 4.16 (105.6) | **E†** 4.00 (101.6) |
| **F** .75 (77) | **F†** .75 (77) | |

Inches (mm)

† With Metal Bowl

## Ordering Information

| F | 501<br>507 | — | 01 | A | H | | /** |
|---|---|---|---|---|---|---|---|

**Port Threads**
- **— NPT**
- G BSPP

**Port Size**
- **01 1/8 Inch**
- **02 1/4 Inch**

**Bowl**
- **A Polycarbonate**
- D Metal

**Elements**
- **F501**
  - **H Grade 6**
- **F507**
  - O Grade 10

**Drains and Options**
- **Blank Manual Twist Drain**
- S Automatic Pulse Drain
- U Semi-Auto Drain
- X33* Polyurethane Bowl
- X64 Fluorocarbon Seals
- X67 With Mounting Bracket

* Add .65" to overall length.

**Engineering Change Designator**
- Will be entered at factory.

**BOLD ITEMS ARE MOST POPULAR.**



**Parker Hannifin Corporation**
Pneumatic Division
Richland, Michigan
www.wattsfluidair.com

## Technical Information

## Coalescing Filter Flow Ratings in SCFM

F501 Flow measured at 100 PSIG inlet pressure and 1.0 PSIG pressure drop.

F507 Flow measured at 100 PSIG inlet pressure and 0.5 PSIG pressure drop.

For Inlet Pressures other than 100 PSIG

| Inlet Pressure | F501-H | F507-O | Inlet Pressure | F501H | F507-O |
|---|---|---|---|---|---|
| 10 | 1.7 | 2.2 | 160 | 12.2 | 15.2 |
| 20 | 2.4 | 3.0 | 170 | 12.9 | 16.1 |
| 30 | 3.1 | 3.9 | 180 | 13.6 | 17.0 |
| 40 | 3.8 | 4.8 | 190 | 14.3 | 178 |
| 50 | 4.5 | 5.6 | 200 | 15.0 | 18.7 |
| 60 | 5.2 | 6.5 | 210 | 15.7 | 19.6 |
| 70 | 5.9 | 7.4 | 220 | 16.4 | 20.5 |
| 80 | 6.6 | 8.3 | 230 | 17.1 | 21.3 |
| 90 | 7.3 | 9.1 | 240 | 17.8 | 22.2 |
| 100 | 8.0 | 10.0 | 250 | 18.5 | 23.1 |
| 110 | 8.7 | 10.9 | 260 | 19.2 | 23.9 |
| 120 | 9.4 | 11.7 | 270 | 19.9 | 24.8 |
| 130 | 10.1 | 12.6 | 280 | 20.6 | 25.7 |
| 140 | 10.8 | 13.5 | 290 | 21.3 | 26.6 |
| 150 | 11.5 | 14.4 | 300 | 21.9 | 27.4 |
| **Polycarbonate Bowl Limit 150 PSIG** | | | **Mini Zinc Bowl Only Limit 300 PSIG** | | |

## F501, F507 Filter Kits & Accessories

**Bowl Kits –**
- Polycarbonate (A) ..... BK504Y
- Metal (D) ..... BK505Y
- Polycarbonate (A) with Automatic Pulse Drain ..... BK504SY
- Metal (D) with Automatic Pulse Drain ..... BK505SY

**Drain Kits –**
- Manual Twist Drain ..... SA600Y7-1
- Automatic Pulse Drain ..... RK504SY
- Semi-Automatic "Overnight" Drain ..... SA602A7
  (Drains automatically under zero pressure)

**Filter Element Kits –**
- Grade 6 ..... EKF501H
- Grade 10 ..... EKF507

**Mounting Bracket Kit** ..... Must be Ordered with Filter

## Specifications

**Bowl Capacity** ..... 1 Ounce

**Port Threads** ..... 1/8, 1/4 Inch

**Pressure & Temperature Ratings –**

Polycarbonate Bowl ..... 0 to 150 PSIG (0 to 10.2 bar)
40°F to 125°F (4.4°C to 52°C)

Metal Bowl ..... 0 to 300 PSIG (0 to 20.4 bar)
40°F to 180°F (4.4°C to 82.2°C)

With Automatic Pulse Drain ..... 175 PSIG Max. Press. (11.9 bar)

**( ) = BOWL TYPE**

**Weight**

Polycarbonate Bowl ..... 0.3 lb. (0.14 kg) / Unit
7 lb. (3.18 kg) / 24-Unit Master Pack

Metal Bowl ..... 0.5 lb. (0.23 kg) / Unit
12 lb. (5.44 kg) / 24-Unit Master Pack

## Materials of Construction

**Body** ..... Aluminum

**Bowls** ..... Polycarbonate
Metal (Zinc)

**Drains** ..... Brass

**Filter Elements** ..... Borosilicate Fibers & Felt

**End Caps** ..... Urethane

**Seals** ..... Nitrile

## Media Specifications

| Grade | D.O.P. Coalescing Efficiency 0.3 to 0.6 Micron Particles | Maximum Oil Carryover[1] PPM w/w | Pressure Drop (PSID)[2] @ Rated Flow | | Particulate Micron Rating |
|---|---|---|---|---|---|
| | | | Media Dry | Media Wet With 10-20 wt. oil | |
| 6 | 99.97% | 0.008 | 1.0 | 2-3 | 0.01 |
| 10 | 95% | 0.85 | 0.5 | 0.5 | 0.7 |

[1] Tested per BCAS 860900 at 40 ppm inlet.
[2] Add dry + wet for total pressure drop.
D.O.P. = Dioctylphthalate



**Parker Hannifin Corporation**
Pneumatic Division
Richland, Michigan
www.wattsfluidair.com

# F701 Coalescing Filters – Compact

## Features

- Removes liquid aerosols and sub-micron particles
- Liquids gravitate to the bottom of the element and will not re-enter the airstream
- Oil free air for critical applications, such as air gauging and pneumatic instrumentation and controls
- Interchangeable twist and automatic float drains
- Differential pressure indicator standard
- Shown with recommended metal bowl guard
- High flow: Grade 6 element 1/4" – 45 SCFM§, 3/8" – 48 SCFM§, 1/2" – 65 SCFM§; Grade 10 element 1/4" – 60 SCFM§, 3/8" – 72 SCFM§, 1/2" – 95 SCFM§

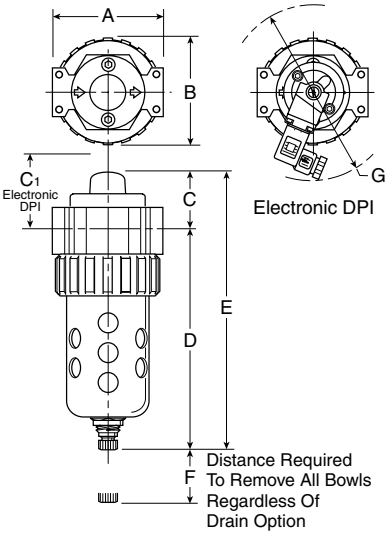


| Port Size | NPT | |
|---|---|---|
| | Twist Drain | Automatic Float Drain |
| Poly Bowl ‡ / Metal Guard | | |
| 1/4" | **F701-022E*** | **F701-026E*** |
| 3/8" | **F701-032E*** | **F701-036E*** |
| 1/2" | **F701-042E*** | **F701-046E*** |
| Metal Bowl / Sight Gauge | | |
| 1/4" | **F701-024E*** | **F701-028E*** |
| 3/8" | **F701-034E*** | **F701-038E*** |
| 1/2" | **F701-044E*** | **F701-048E*** |

**Standard part numbers shown bold, with Grade 6 Elements (for Grade 10 Elements, replace "E" with "H" in the 6th position). For other models refer to ordering information below.**

‡ For polycarbonate bowl see Caution on inside cover.

§ SCFM = Standard cubic feet per minute at 90 PSIG inlet and 5 PSIG pressure drop.

| F701 Coalescing Filter Dimensions | | | |
|---|---|---|---|
| **A** 2.81 (71) | **B** 2.74 (70) | **C** 1.46 (37) | **C1** 1.81 (46) |
| **D** 5.69 (145) | **D†** 5.74 (146) | **E** 7.15 (182) | **E†** 7.20 (183) |
| **F** 2.25 (57) | **G Dia.** 4.50 (114) | | |

Inches (mm)

† With Automatic Float Drain

## Ordering Information

| F701 | — | 02 | 2 | E | * | |
|---|---|---|---|---|---|---|

**Port Threads**
- **— NPT**
- G* BSPP

* 1/4 & 3/8 inch meet ISO 1179-1 Standard.

**Port Size**
- **02 1/4 Inch**
- **03 3/8 Inch**
- **04 1/2 Inch**

**Bowl Options**

| Polycarbonate Bowl | Metal Bowl |
|---|---|
| **2 Metal Bowl Guard / Twist Drain** | 3 Twist Drain |
| **6 Metal Bowl Guard / Auto Float Drain** | **4 Sight Gauge / Twist Drain** |
| | 7 Auto Float Drain |
| | **8 Sight Gauge / Auto Float Drain** |

**Element**
- **E Grade 6 (.01 Micron)**
- H Grade 10 (1.0 Micron)

**Engineering Level**
- * Will be Entered at Factory.

**Options**
- **Blank With Differential Pressure Indicator**
- N Without Differential Pressure Indicator

**BOLD ITEMS ARE MOST POPULAR.**



**Parker Hannifin Corporation**
Pneumatic Division
Richland, Michigan
www.wattsfluidair.com

## Technical Information

### Grade 6

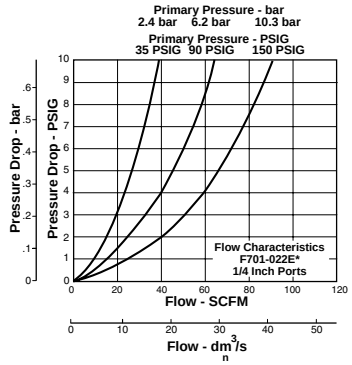


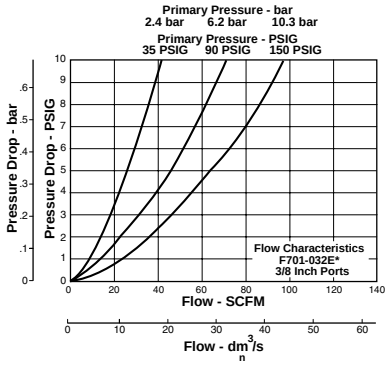


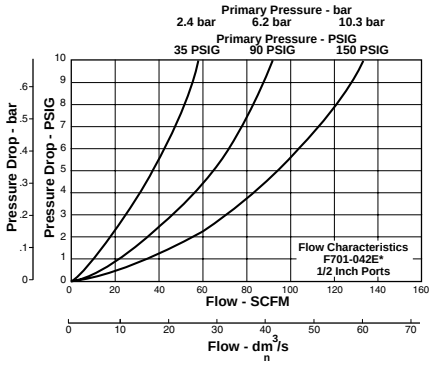


### Grade 10

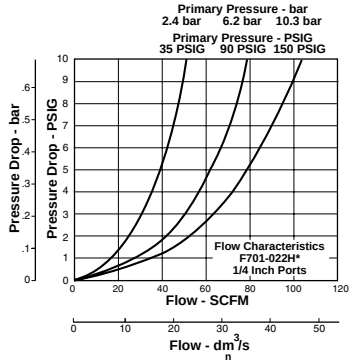


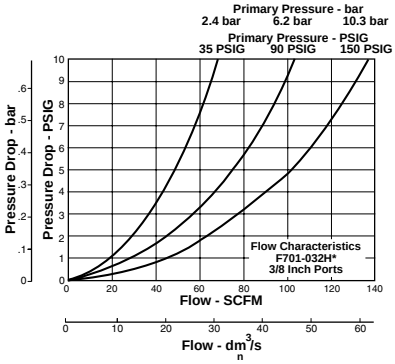


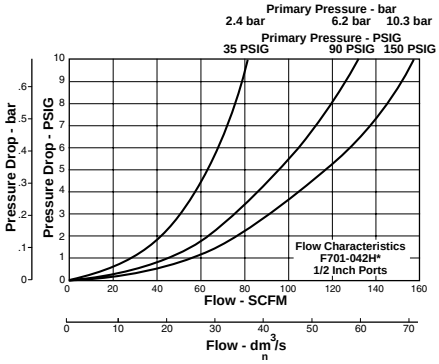


## F701 Coalescing Filter Kits & Accessories

**Bowl Guard Kit** ..... PS705

**Bowl Kits –**

Poly Bowl – Automatic Float Drain ..... PS722
Twist Drain ..... PS732

Metal Bowl – Automatic Float Drain ..... PS726
Twist Drain ..... PS734
Sight Gauge / Automatic Float Drain ..... PS723
Sight Gauge / Twist Drain ..... PS735

*1/4, 3/8, 1/2 Inch (W) (Old F701) ..... BK605WA*
*1/4, 3/8, 1/2 Inch (E) (Old F701) ..... BK603A*

**DPI Replacement Kit** ..... PS781

**Differential Pressure Pop Up Indicator Repair Kit** ..... RK701P
(only works with originally equipped 701 units)

**Differential Pressure Gauge** ..... DP276-P
(only works on units without pop-up indicator)

**Drain Kits –**

Automatic Float Drain ..... PS506
Twist Drain ..... PS512
*Internal Automatic Drain - High Pressure (T) (Old F701) ..... SA702MD*
*Manual Twist Drain (Old F701) ..... SA600Y7-1*

**Filter Element Kits –**

Grade 6 (Standard) ..... PS724
*1/4, 3/8, 1/2 Inch (W) (Old F701) ..... F701-C3-0771*
*1/4, 3/8, 1/2 Inch (E) (Old F701) ..... F701-C3-0772*
Grade 10 (Optional) ..... PS730
*1/4, 3/8, 1/2 Inch (W) (Old F701) ..... F701-C7-0771*
*1/4, 3/8, 1/2 Inch (E) (Old F701) ..... F701-C7-0772*

**Mounting Bracket Kit** ..... PS743
*1/4, 3/8, 1/2 (Mounts to Filter Head) (Old F701) ..... SAF602-0572*

**Sight Gauge Kit** ..... PS914

## Specifications

**Bowl Capacity** ..... 4.4 Ounces

**Sump Capacity** ..... 1.75 Ounces

Operation – Normal Operating Pressure Drop ..... 2 PSIG
Maximum Recommended Pressure Drop ..... 10 PSIG
(Element should be replaced)
Minimum Recommended Flow –
20% Nominal Rating of Element

**Port Threads** ..... 1/4, 3/8, 1/2 Inch

**Pressure & Temperature Ratings –**

Without Differential Pressure Indicator:
Polycarbonate Bowl – 0 to 150 PSIG (0 to 10.3 bar)
32°F to 125°F (0°C to 52°C)
Metal Bowl – 0 to 250 PSIG (0 to 17.2 bar)
32°F to 175°F (0°C to 80°C)
With Differential Pressure Indicator: 0 to 150 PSIG (0 to 10.3 bar)
32°F to 125°F (0°C to 52°C)
Automatic Float Drain – 15 to 250 PSIG (1.0 to 17.2 bar)

**Weight** ..... 1.5 lb (0.7 kg)

## Materials of Construction

**Body** ..... Zinc

**Bowls** ..... Transparent Polycarbonate
Metal (Zinc) With or Without Sight Gauge

**Bowl Guard** ..... Steel

**Collar** ..... Plastic

**Drains –** Twist Drain – Body & Nut ..... Plastic
Automatic Float Drain –..... Housing, Float Plastic
Seals ..... Nitrile
Springs, Push Rod ..... Stainless Steel

**Filter Element –**

Borosilicate & Felt Glass Fibers 99.97% DOP Efficiency
Largest Aerosol Particle Passed (Grade 6) ..... 0.01 Micron
Largest Solid Particle Passed (Grade 6) ..... 0.30 Micron

**Seals** ..... Nitrile

**Sight Gauge** ..... Nylon



**Parker Hannifin Corporation**
Pneumatic Division
Richland, Michigan
www.wattsfluidair.com

# F701 Coalescing Filters – Standard

## Features

- Removes liquid aerosols and sub-micron particles
- Liquids gravitate to the bottom of the element and will not re-enter the airstream
- Oil free air for critical applications, such as air gauging and pneumatic instrumentation and controls
- Interchangeable twist and automatic float drains
- Differential pressure indicator standard
- Shown with recommended metal bowl guard
- High flow: Grade 6 element 3/4" – 80 SCFM§ Grade 10 element 3/4" – 160 SCFM§

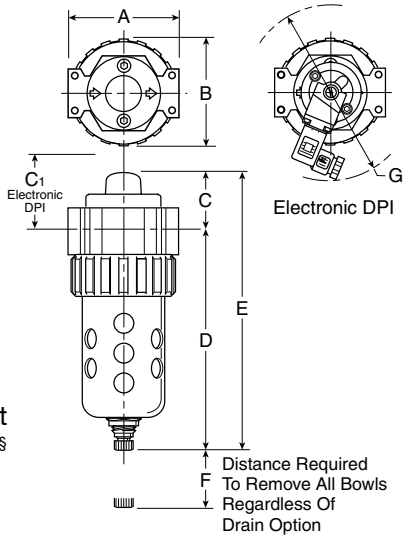


| Port Size | NPT | |
|---|---|---|
| | Twist Drain | Automatic Float Drain |
| Poly Bowl ‡ / Metal Guard | | |
| 3/4" | **F701-062E*** | **F701-066E*** |
| Metal Bowl / Sight Gauge | | |
| 3/4" | **F701-064E*** | **F701-068E*** |

**Standard part numbers shown bold, with Grade 6 Elements (for Grade 10 Elements, replace "E" with "H" in the 6th position).**
For other models refer to ordering information below.

‡ For polycarbonate bowl see Caution on inside cover.

§ SCFM = Standard cubic feet per minute at 90 PSIG inlet and 5 PSIG pressure drop.

| F701 Coalescing Filter Dimensions | | | |
|---|---|---|---|
| **A** 3.24 (82) | **B** 3.25 (83) | **C** 1.63 (41) | **C1** 2.00 (51) |
| **D** 6.97 (177) | **D†** 7.00 (178) | **E** 8.60 (218) | **E†** 8.63 (219) |
| **F** 2.75 (70) | **G Dia.** 4.50 (114) | | |

Inches (mm)

† With Automatic Float Drain

## Ordering Information

| F701 | — | 06 | 2 | E | * | |
|---|---|---|---|---|---|---|

**Port Threads**
- **— NPT**
- G BSPP

**Port Size**
- **06 3/4 Inch**

**Bowl Options**

Polycarbonate Bowl
- **2 Metal Bowl Guard / Twist Drain**
- **6 Metal Bowl Guard / Auto Float Drain**

Metal Bowl
- 3 Twist Drain
- **4 Sight Gauge / Twist Drain**
- 7 Auto Float Drain
- **8 Sight Gauge / Auto Float Drain**

**Element**
- **E Grade 6 (.01 Micron)**
- H Grade 10 (1.0 Micron)

**Engineering Level**
- * Will be Entered at Factory.

**Options**
- **Blank With Differential Pressure Indicator**
- N Without Differential Pressure Indicator

**BOLD ITEMS ARE MOST POPULAR.**



**Parker Hannifin Corporation**
Pneumatic Division
Richland, Michigan
www.wattsfluidair.com

## Technical Information

### Grade 6

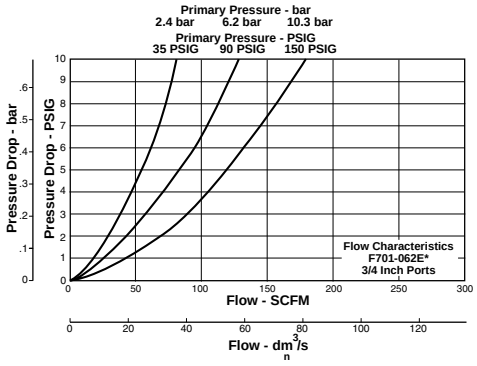


### Grade 10

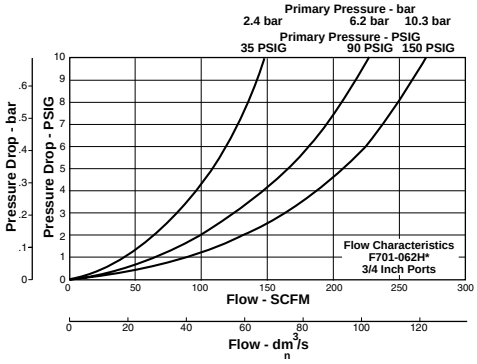


## F701 Coalescing Filter Kits & Accessories

**Bowl Guard Kit** ..... PS805

**Bowl Kits –**
Poly Bowl – Automatic Float Drain ..... PS822
Twist Drain ..... PS832
Metal Bowl – Automatic Float Drain ..... PS826
Twist Drain ..... PS834
Sight Gauge / Automatic Float Drain ..... PS823
Sight Gauge / Twist Drain ..... PS835

**DPI Replacement Kit** ..... PS781

**Drain Kits –**
Automatic Float Drain ..... PS506
Twist Drain ..... PS512
Manual Twist Drain ..... SA600Y7-1

**Filter Element Kits –**
Grade 6 (Standard) ..... PS824
Grade 10 (Optional) ..... PS830

**Mounting Bracket Kit** ..... PS843

**Sight Gauge Kit** ..... PS914

### Specifications

**Bowl Capacity** ..... 7.2 Ounces

**Sump Capacity** ..... 2.8 Ounces

**Operation –** Normal Operating Pressure Drop ..... 2 PSIG
Maximum Recommended Pressure Drop ..... 10 PSIG
(Element should be replaced)
Minimum Recommended Flow –
20% Nominal Rating of Element

**Port Threads** ..... 1/2 & 3/4 Inch

**Pressure & Temperature Ratings –**
Without Differential Pressure Indicator:
Polycarbonate Bowl – 0 to 150 PSIG (0 to 10.3 bar)
32°F to 125°F (0°C to 52°C)
Metal Bowl – 0 to 250 PSIG (0 to 17.2 bar)
32°F to 175°F (0°C to 80°C)
With Differential Pressure Indicator: 0 to 150 PSIG (0 to 10.3 bar)
32°F to 125°F (0°C to 52°C)
Automatic Float Drain – 15 to 250 PSIG (1.0 to 17.2 bar)

**Weight** ..... 2.4 lb. (1.1 kg)

## Materials of Construction

**Body** ..... Zinc

**Bowls** ..... Transparent Polycarbonate
Metal (Zinc) With or Without Sight Gauge

**Bowl Guard** ..... Steel

**Collar** ..... Plastic or Metal

**Drains –** Twist Drain – Body & Nut ..... Plastic
Automatic Float Drain – ..... Housing, Float Plastic
Seals ..... Nitrile
Springs, Push Rod ..... Stainless Steel

**Filter Element –**
Borosilicate & Felt Glass Fibers 99.97% DOP Efficiency
Largest Aerosol Particle Passed (Grade 6) ..... 0.01 Micron
Largest Solid Particle Passed (Grade 6) ..... 0.30 Micron

**Seals** ..... Nitrile

**Sight Gauge** ..... Nylon



**Parker Hannifin Corporation**
Pneumatic Division
Richland, Michigan
www.wattsfluidair.com

# F701 Coalescing Filters – Hi-Flow

## Features

- Removes liquid aerosols and sub-micron particles
- Protects pneumatic systems from contamination that standard particulate filters will not catch
- Two different grade elements available
- Differential pressure pop-up indicator standard
- Differential pressure gauge optional
- High flow design

**Note:** All coalescing filters should be protected by a particulate filter (i.e., F602, or other) installed upstream.

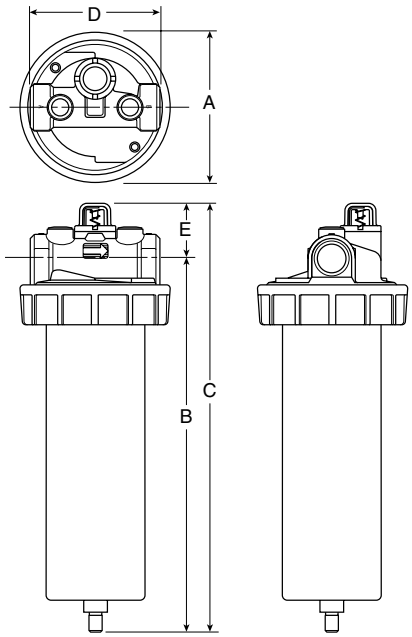


| Port Size | Grade 6 | | Grade 10 | |
|---|---|---|---|---|
| | Flow (SCFM)* | Part Number | Flow (SCFM)* | Part Number |
| 3/4" | 95 | **F701-06E3P** | 158 | **F701-06E7P** |
| 3/4" | 170 | **F701-06L3P** | 285 | **F701-06L7P** |
| 1" | 95 | **F701-08E3P** | 158 | **F701-08E7P** |
| 1" | 170 | **F701-08L3P** | 285 | **F701-08L7P** |

* Dry media flow. For wet media info see table to right

| F701 Coalescing Filter Dimensions | | | | | | |
|---|---|---|---|---|---|---|
| Port Size | Bowl Capacity | A | B | C | D | E |
| 3/4 & 1 Inch (E) | 32 oz. | 4.95 (126) | 11.77 (299) | 13 (330) | 4.00 (101) | 1.23 (31) |
| 3/4 &1 Inch (L) | 100 oz. | 4.95 (126) | 21.39 (543) | 22.63 (575) | 4.00 (101) | 1.23 (31) |

"G" Differential Pressure Gauge add 2.00(50.8) to C & E.
"Q" External Auto Drain add 1.70 (43.1) to B & C.

inches (mm)

## Ordering Information

| F701 | — | 06 | E | 3 | P | | /** |
|---|---|---|---|---|---|---|---|

**Port Threads**
- **— NPT**
- G BSPP

**Port Size**
- 06 3/4 Inch
- 08 1 Inch

**Bowl**
- **E Metal without Sight Gauge**
- **L Metal without Sight Gauge 100 oz.**

**Element**
- **3 Grade 6**
- **7 Grade 10**

**Element Service Indicator**
- Blank None
- **P Pop-up Style**
- G Differential Pressure Gauge

**Bowl Drains**
- **Blank Manual Twist Drain**
- T Internal Automatic Drain
- Q External Auto Drain

**Engineering Level**
- * Will be Entered at Factory

**BOLD ITEMS ARE MOST POPULAR.**



**Parker Hannifin Corporation**
Pneumatic Division
Richland, Michigan
www.wattsfluidair.com

## Element Selection

| Element Grade | | Applications |
|---|---|---|
| 6 | General air coalescing applications when total removal of liquid aerosols and suspended fines is required in all pressure ranges. Protection of air dryers, air gauging, air logic, modulating systems, critical air conveying, most breathing air systems, etc. | |
| 10 | Precoalescer or prefilter for Grade 6 to remove gross amounts of water and oil, or tenacious aerosols which are difficult to remove. Upgrading existing particulate equipment to coalescing without increase in pressure drop. | |

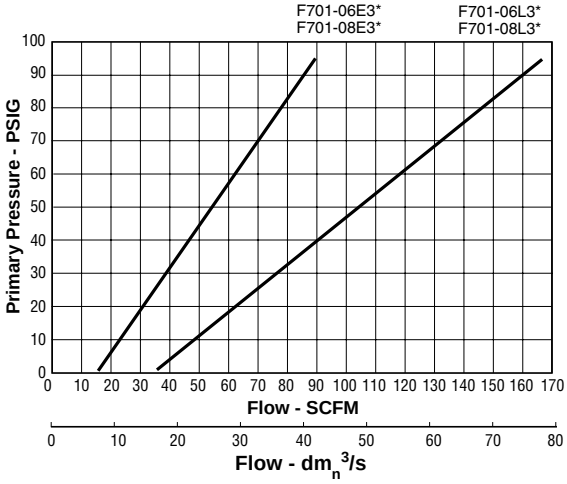


## Media Specifications

| Grade | D.O.P. Coalescing Efficiency 0.3 to 0.6 Micron Particles | Maximum Oil Carryover[1] PPM w/w | Pressure Drop (PSID)[2] @ Rated Flow | | Flow: SCFM @ 1 PSID Operating Pressure 100 PSIG |
|---|---|---|---|---|---|
| | | | Media Dry | Media Wet With 10-20 wt. oil | |
| 6 | 99.97% | 0.008 | 1.0 | 2-3 | 3.5 SCFM |
| 10 | 95% | 0.85 | 0.5 | 0.5 | 5.3 SCFM |

[1] Tested per BCAS 860900 at 40 ppm inlet.
[2] Add dry + wet for total pressure drop.
D.O.P. = Dioctylphthalate

## F701 Filter Kits & Accessories

**Mounting Brackets –**
**Port Size**
3/4 Inch (Pair of Pipe Mounted Brackets) ..... SA200AW57
1 Inch (Pair of Pipe Mounted Brackets) ..... SA200CW57

**Bowl Kits –**
**Port Size**
3/4, 1 Inch (E) ..... BK603B
3/4, 1 Inch (L) ..... BK603C

**Differential Pressure Pop Up Indicator Repair Kit** ..... RK701P
(only works with originally equipped units)

**Differential Pressure Gauge** ..... DP276-P
(only works on units without pop-up indicator)

**Drain Kits –**
Internal Automatic Drain - High Pressure (T) ..... SA702MD
Manual Twist Drain ..... SA600Y7-1

**Filter Element Kits –**
**Port Size - Grade 6**
3/4, 1 Inch (E) ..... F701-C3-0773
3/4, 1 Inch (L) ..... F701-C3-0774

**Port Size - Grade 10**
3/4, 1 Inch (E) ..... F701-C7-0773
3/4, 1 Inch (L) ..... F701-C7-0774

## Specifications

**Operation –**
Maximum Recommended Pressure Drop ..... 10 PSIG
(element should be replaced)
Normal Operating Pressure Drop (Dry) ..... 2 PSIG
Normal Operating Pressure Drop (Wet) ..... 5 PSIG

( ) = Bowl Type

**Minimum Recommended Flow** ..... 20% of Rated Flow

**Maximum Pressure (Manual Drains)** ..... 0 to 300 PSIG (0-20 bar)

**Maximum Pressure Automatic Drains) –**
"R" Drain ..... 175 PSIG (12 bar)
"T" Drain ..... 250 PSIG (17 bar)
"Q" Drain ..... 250 PSIG (17 bar)

**Maximum Temperature** ..... 32°F to 150°F (0°C to 65°C)
Maximum temperature with "T", "R", or "Q" Drains ... 125°F (52°C)

**Weight –**
3/4 & 1 Inch (E) 32 oz. ..... 5 lb.
3/4 & 1 Inch (L) 100 oz. ..... 8 lb.

## Materials of Construction

**Body & Flange Ring** ..... Zinc

**Bowl –**
Metal Bowl (E) (L) ..... Aluminum

**Drains –**
Automatic Float Drain –
Housing "R", "T" ..... Acetal
Housing "Q" ..... Bronze
Manual Twist Drain ..... Brass

**Seals & Float** ..... Buna N

**Springs** ..... Stainless Steel

**Elements (Media)** ..... Borosilicate Fibers & Felt

**Element End Caps** ..... Urethane

**Seals** ..... Buna N



**Parker Hannifin Corporation**
Pneumatic Division
Richland, Michigan
www.wattsfluidair.com

# 35F, 43F Coalescing Filters – Hi-Flow

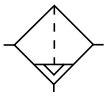

Auto Drain

## Features

- Heavy-duty cast aluminum housings to withstand operating pressures up to 250 PSIG*
- Differential pressure indicator to eliminate the guesswork of element replacement
- Differential pressure gauge available, order separately, Kit DP3-01-000
- Unique drain mounting plate design offers a trouble-free method for interchanging and installing external drains
- High-flow filter elements: coalescing, 1 micron and 0.01 Micron
- High flow: 1-1/2" – 710 SCFM§
  2" – 710 SCFM§
  3" – 1770 SCFM§

* Without Differential Pressure Indicator – Max. supply pressure is 250 PSIG (20.7 bar).

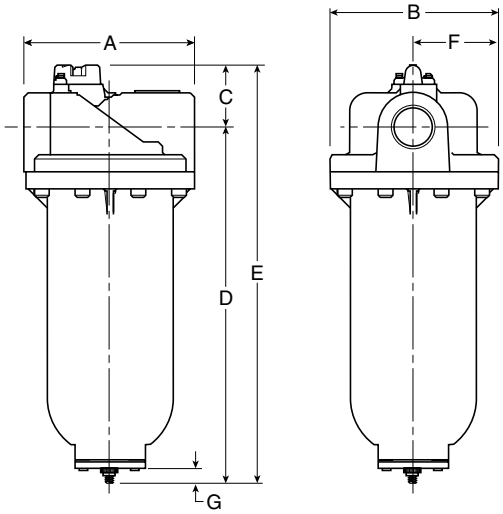


| Series | Port size | Element type | Part number (NPT) Automatic drain |
|---|---|---|---|
| 35F | 1-1/2 | 0.01 micron | **35F77EAP** |
| | 1-1/2 | 1.0 micron | **35F77HAP** |
| | 1-1/2 | Adsorber | **35F77ZAP** |
| | 2 | 0.01 micron | **35F87EAP** |
| | 2 | 1.0 micron | **35F87HAP** |
| | 2 | Adsorber | **35F87ZAP** |
| 43F | 3 | 0.01 micron | **43FN7EAP** |
| | 3 | 1.0 micron | **43FN7HAP** |
| | 3 | Adsorber | **43FN7ZAP** |

**Standard part numbers shown bold.**
For other models refer to ordering information below.

§ SCFM = Standard cubic feet per minute at 90 PSIG inlet and 5 PSIG pressure drop.

| 35F Coalescing Filter Dimensions | | | | | | |
|---|---|---|---|---|---|---|
| A | B | C | D | E | F | G |
| 7.80 (198) | 7.76 (197) | 2.83 (72) | 16.24 (412.5) | 19.07 (484) | 3.88 (98.6) | .55 (14) |
| **43F Coalescing Filter Dimensions** | | | | | | |
| A | B | C | D | E | F | G |
| 8.94 (227) | 8.88 (225.5) | 3.48 (88) | 25.96 (659.4) | 29.44 (748) | 4.44 (112.8) | .55 (14) |

inches (mm)

## Ordering Information

| 35F | 7 | 7 | H | A | P | |
|---|---|---|---|---|---|---|

**Port Size**
- 35F
- 7 1-1/2 Inch
- 8 2 Inch
- 43F
- N 3 Inch

**Bowl**
- 7 Metal without Sight Gauge, Auto Float Drain

**Element**
- E .01 Micron
- H 1 Micron
- Z Adsorber

**Engineering Level**
- A

**Options**
- N Without Differential Pressure Indicator
- P* With Differential Pressure Indicator
- G** With Differential Pressure Gauge

* Max. pressure rating 150 PSIG.
** Gauge ships loose.

**Port Threads**
- Blank NPT
- 1 BSPP
- 2 BSPT

**BOLD ITEMS ARE MOST POPULAR.**



**Parker Hannifin Corporation**
Pneumatic Division
Richland, Michigan
www.wattsfluidair.com

## Technical Information

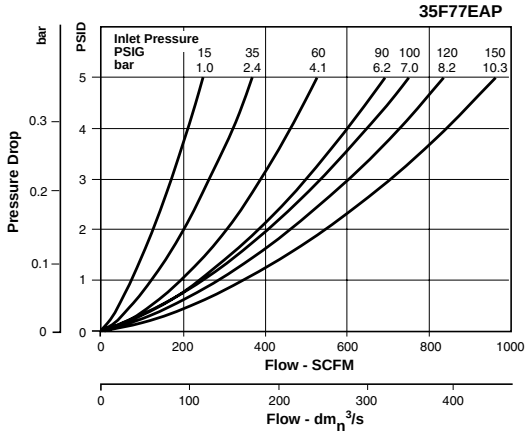


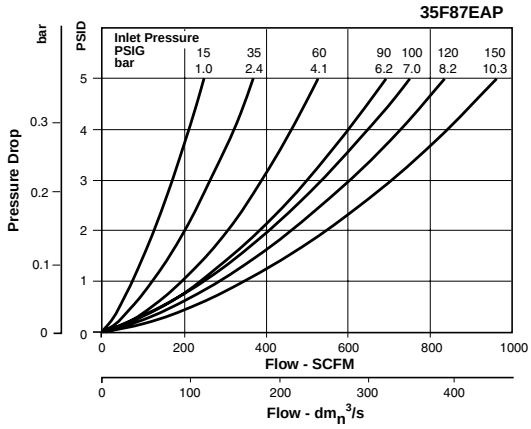


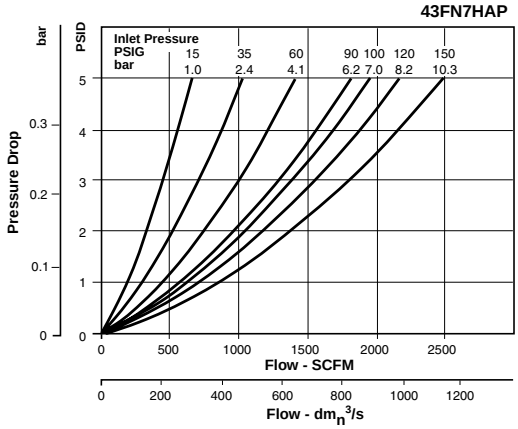


## 35F & 43F Coalescing Filter Kits & Accessories

**Differential Pressure Indicator Cap –**
For pressures over 150 PSIG ..... GRP-95-022

**Differential Pressure Gauge** ..... DP3-01-000

**Differential Pressure Indicator** ..... DP2-02-001

**Drain, Automatic, Internal, Fluorocarbon –**
1/8 NPT ..... GRP-95-981

**Drain Plate Kit –**
1/2 NPT Tapped Drain Port ..... GRP-95-393

**Element –**
35F: 0.01 Micron ..... MTP-95-502
35F: 1.0 Micron ..... MSP-95-502
35F: Adsorber..... MXP-95-502
43F: 0.01 Micron ..... MTP-95-562
43F: 1.0 Micron ..... MSP-95-876
43F: Adsorber..... MXP-95-565

**Manual Drain Kit**
with 1/2" Drain Plate..... GRP-95-392

## Specifications

**Maximum Supply Pressure –**
without DPI and with Pressure Gauge .....250 PSIG (17.2 bar)*
with DPI .....150 PSIG (10.3 bar)

**Operating Temperature**.....32° to 150°F (0° to 65.5°C)

**Port Size –**
35F .....1-1/2, 2 Inch
43F ..... 3 Inch

**Standard Filtration*** – Micron ..... 1.0, 0.01
Adsorber .....Activated carbon

**Weight –**
35F ..... 19.3 lb. (8.7 kg
43F .....32.8 lb. (14.9 kg)

* Filtration temperature of 70°F (21°C) @100 PSIG (6.9 bar) with typical compressor lubricating oil and protected by 0.01 micron filter.

## Materials of Construction

**Body**..... Aluminum

**Bowls**..... Aluminum

**Filter Element –** 0.01 & 1.0 Micron.....Borosilicate Cloth
Adsorber ..... Activated Carbon

**Seals** .....Fluorocarbon

**Stud**.....Plated Steel

**Seals** .....Fluorocarbon

**Stud**.....Plated Steel



**Parker Hannifin Corporation**
Pneumatic Division
Richland, Michigan
www.wattsfluidair.com

# Bulk Liquid Separators – P3TF

**P3TFA98WEAN**

## Features

- Tested in Accordance with ISO 8573.9.
- High Liquid Removal Efficiencies at All Flow Conditions.
- Low Pressure Losses for Low Operational Costs.
- Multiple Port Sizes for a Given Flow Rate Provides Increased Flexibility During Installation.
- Suitable for Variable Flow Compressors.
- Works with All Types of Compressor and Compressor Condensate.
- Low Maintenance.
- Lightweight Cast Aluminum Housing with 1/4" to 3" Ports.
- External Surface Epoxy Painted for Maximum Corrosion Resistance.

## Applications

- Bulk Liquid Removal at Any Point in a Compressed Air System
- Protection of Refrigeration and Heatless Regenerative Desiccant Dryers
- Liquid Removal from Compressor Inter-coolers / After-coolers
- Liquid Separation Within Refrigeration Dryers
- Pre-Filtration

## Ordering Information

| P3TF | A | 9 | 2WA | A | N |
|---|---|---|---|---|---|

**Engineering Level**

| | |
|---|---|
| **A** | **Current Engineering Level** |

**Thread Type**

| | |
|---|---|
| 2 | BSPT |
| **9** | **NPT** |

**Port Size / Flow**

| | |
|---|---|
| **2WA** | **1/4 Inch / 21 SCFM** |
| **3WB** | **3/8 Inch / 85 SCFM** |
| **4WC** | **1/2 Inch / 85 SCFM** |
| **6WD** | **3/4 Inch / 233 SCFM** |
| **8WE** | **1 Inch / 233 SCFM** |
| BWG | 1-1/2 Inch / 742 SCFM |
| CWH | 2 Inch / 742 SCFM |
| EWK | 3 Inch / 1695 SCFM |

**Drain Type**

| | |
|---|---|
| **A** | **Auto Internal Float*** |

* Models are supplied with Auto Drain as Standard.

**BOLD ITEMS ARE MOST POPULAR.**



**Parker Hannifin Corporation**
Pneumatic Division
Richland, Michigan
www.wattsfluidair.com

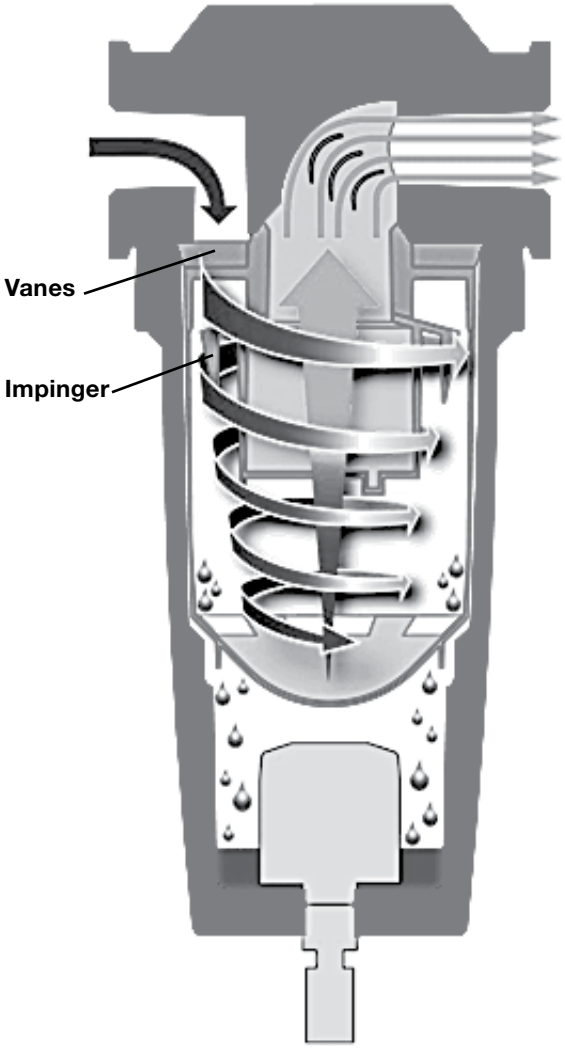


## Operation

- Air Enters the Bulk Liquid Separator Inlet and Turns Into the Separator Module.
- The Inlet of the Separator Module Contains a Set of Fixed Vanes Which the Air Must Pass Through.
- The Vanes Force the Air to Spin Inside the Vessel.
- The Spinning Air is Then Forced to Change Direction as it Passes the Impinger.
- A Vortex is Created Which, Due to the Design of the Separator Module, Narrows and Intensifies as it Reaches the Lower Part of the Separator Module.
- Bulk Liquid is Removed From the Airstream Due to:
  - Directional Changes of the Airstream
  - Velocity Changes
  - Centrifugal Action of the Vortex
- As the Vortex Reaches the Bottom of the Module, Air is Forced Through The Center of the Vortex.
- Aerospace Turning Vanes, Located in the Outlet of the Separator Module, Turn an Inefficient Corner Into a Number of More Efficient Corners.
- Turning Vanes Reduce Turbulence, Minimizing Pressure Loss and Cost of Ownership.
- The Number of Vanes Required is Dependent Upon the Conduit Diameter.

# Bulk Liquid Separators – P3TF

## Specifications

**Pressure Differential at Rated Flow**..... 1.0 PSID (0.07 bar)

| Model Number | Pipe Size | SCFM (L/s) | Maximum Operating Pressure psig (bar) | Operating Temperature | Weight Lb. (kg) |
|---|---|---|---|---|---|
| **P3TFA92WAAN** | 1/4" | 21 (10) | 232 (16) | Maximum 176°F (80°C) Minimum 35°F (1.5°C) | 0.9 (0.4) |
| **P3TFA93WBAN** | 3/8" | 85 (40) | | | 2.2 (1.0) |
| **P3TFA94WCAN** | 1/2" | 85 (40) | | | 2.2 (1.0) |
| **P3TFA96WDAN** | 3/4" | 233 (110) | | | 4.8 (2.2) |
| **P3TFA98WEAN** | 1 | 233 (110) | | | 2.6 (5.7) |
| **P3TFA9BWGAN** | 1-1/2" | 742 (350) | | | 5.3 (11.6) |
| **P3TFA9CWHAN** | 2" | 742 (350) | | | 5.3 (11.6) |
| **P3TFA9EWKAN** | 3" | 1695 (800) | | | 12.0 (26.4) |

Stated flows are for operation at 102 psig (7 bar) with reference to 20°C, 1 bar (a), 0% relative water vapor pressure.

## Flow

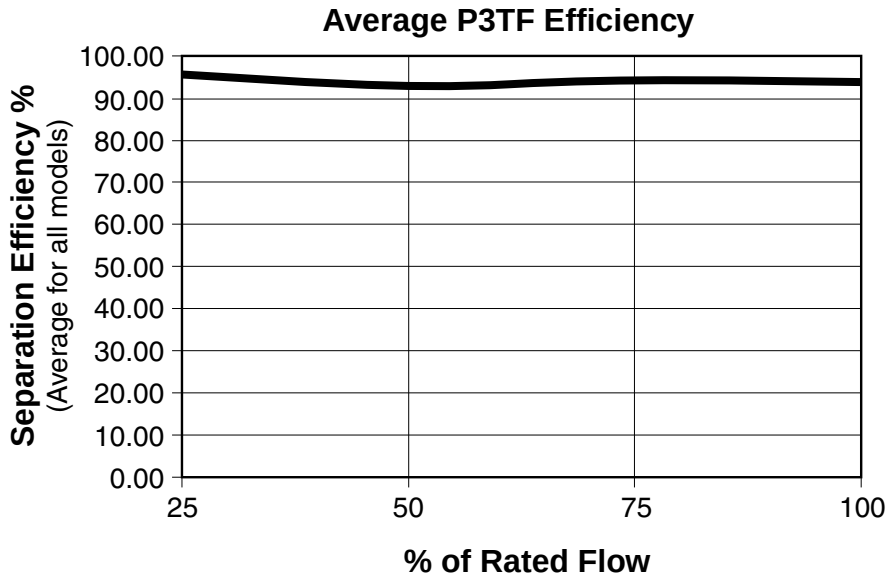




**Parker Hannifin Corporation**
Pneumatic Division
Richland, Michigan
www.wattsfluidair.com

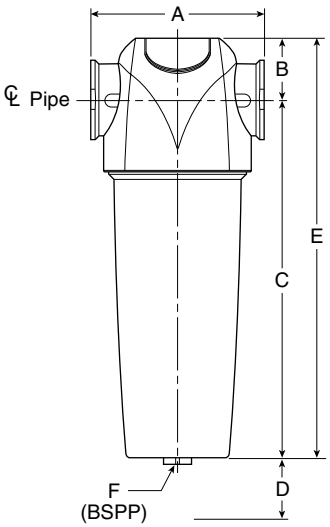


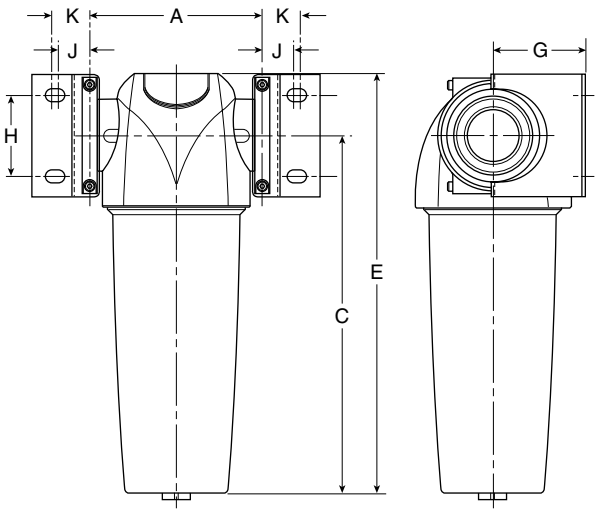


## Dimensions

| Model Number | Wall Mounting Bracket Kit | Pipe Size | A | B | C | D | E | BSPP F | G | H | J | K |
|---|---|---|---|---|---|---|---|---|---|---|---|---|
| **P3TFA92WAAN** | **P3TKA00MWA** | 1/4" | 3.00 (76) | 1.12 (28.5) | 6.02 (153) | 1.58 (40) | 7.15 (181.5) | 1/2 | 2.05 (50) | 1.18 (30) | 0.71 (18) | 0.96 (24.5) |
| **P3TFA93WBAN** | **P3TKA00MWB** | 3/8" | 3.83 (97.5) | 1.34 (34) | 7.91 (201) | 1.97 (50) | 9.25 (235) | 1/2 | 2.36 (60) | 1.57 (40) | 0.81 (20.5) | 1.00 (25.5) |
| **P3TFA94WCAN** | **P3TKA00MWB** | 1/2" | 3.83 (97.5) | 1.34 (34) | 7.91 (201) | 1.97 (50) | 9.25 (235) | 1/2 | 2.36 (60) | 1.57 (40) | 0.81 (20.5) | 1.00 (25.5) |
| **P3TFA96WDAN** | **P3TKA00MWD** | 3/4" | 5.07 (129) | 1.67 (42.5) | 13.09 (232.5) | 2.76 (70) | 10.80 (275) | 1/2 | 2.68 (68) | 2.36 (60) | 0.91 (23) | 1.10 (28) |
| **P3TFA98WEAN** | **P3TKA00MWD** | 1 | 5.07 (129) | 1.67 (42.5) | 12.68 (322) | 2.76 (70) | 14.35 (364.5) | 1/2 | 2.68 (68) | 2.36 (60) | 0.91 (23) | 1.10 (28) |
| **P3TFA9BWGAN** | **P3TKA00MWF** | 1-1/2" | 6.70 (170) | 1.97 (50) | 18.68 (474.5) | 3.94 (100) | 20.64 (524.5) | 1/2 | 3.62 (92) | 3.31 (84) | 1.26 (32) | 1.54 (39) |
| **P3TFA9CWHAN** | **P3TKA00MWF** | 2" | 6.70 (170) | 1.97 (50) | 18.68 (474.5) | 3.94 (100) | 20.64 (524.5) | 1/2 | 3.62 (92) | 3.31 (84) | 1.26 (32) | 1.54 (39) |
| **P3TFA9EWKAN** | **P3TKA00MWJ** | 3" | 8.07 (205) | 2.36 (60) | 30.39 (772) | 4.72 (120) | 32.76 (832) | 1/2 | 5.31 (135) | 3.94 (100) | 1.40 (35.5) | 1.67 (42.5) |

Inches (mm)

## Bulk Liquid Separator Kits & Accessories

**Drain Kit** ..... EFI

## Materials of Construction

**Automatic Float Drain** ..... Plastic
**Housing / Bowl** ..... Aluminum
**Seals** ..... Fluorocarbon

**For External Drains, please reference WDV3-G Automatic Electrical Drain or ED Zero Loss Drain**

## Wall Mounting Bracket Kit

Mounting brackets provide additional support to filters installed in flexible piping systems or OEM equipment.



**Parker Hannifin Corporation**
Pneumatic Division
Richland, Michigan
www.wattsfluidair.com

# DD Desiccant Dryers

## Features

- These desiccant dryers are a convenient and cost effective means of ensuring your sensitive pneumatic applications are never exposed to damaging moisture
- Compact size for point-of-use applications
- Drying efficiency down to -40°F pressure dew point
- Easily and quickly serviced
- Sightglass in bowl to monitor desiccant
- Built-in particulate after filter prevents downstream dust
- No electricity needed
- Low pressure drop
- No purge air lost as with other dryer types

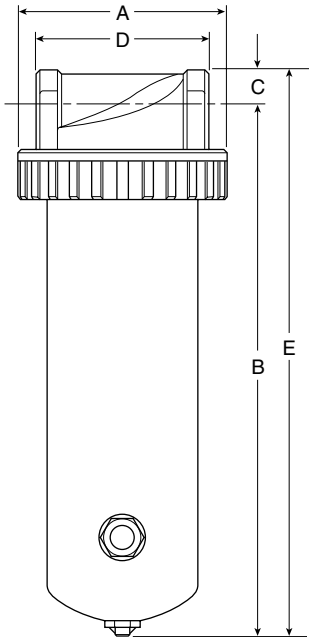


## Applications

- Paint spraying
- Instrument air
- Laboratory instruments
- Control air systems
- Air blanketing

| Port Size | 15 SCFM | 30 SCFM | 60 SCFM |
|---|---|---|---|
| Desiccant Capacity[1] | 2.5 lb[1] | 5 lb.[1] | 10 lb.[1] |
| 1/4" [2] | **DD15-02** | N/A | N/A |
| 3/8" [2] | **DD15-03** | N/A | N/A |
| 1/2" [2] | **DD15-04** | **DD30-04** | **DD60-04** |
| 3/4" | **DD15-06** | **DD30-06** | **DD60-06** |
| 1" | N/A | **DD30-08** | **DD60-08** |

Notes:
1. Desiccant must be ordered separately
2. These units supplied with reducer bushings

| DD Desiccant Dryer Dimensions | | | | | |
|---|---|---|---|---|---|
| **DD15** | **A** 4.94 (125) | **B** 12.69 (322) | **C** .84 (21) | **D*** 4.06 (103) | **E** 13.5 (343) |
| **DD30** | **A** 4.94 (125) | **B** 22.44 (570) | **C** .84 (21) | **D*** 4.06 (103) | **E** 23.25 (591) |
| **DD60** | **A** 4.94 (125) | **B** 29.44 (748) | **C** .84 (21) | **D*** 4.06 (103) | **E** 30.25 (768) |

* Dimension does not include reducer bushings for 1/4", 3/8", 1/2" versions

inches (mm)

## Performance

The rated flow capacities are nominal ratings provided for reference. These capacities are recommended for minimal pressure drop and average desiccant life. A supply of low flow / low humidity air will provide longer desiccant life: whereas, high flow / high humidity air will require more frequent desiccant changes. Installed in an application with intermittent flow, these desiccant dryers will typically dry air for weeks before the silica gel desiccant requires replacement or regeneration.

**BOLD ITEMS ARE MOST POPULAR.**



**Parker Hannifin Corporation**
Pneumatic Division
Richland, Michigan
www.wattsfluidair.com

As the wet compressed air enters through the inlet, the air travels down through the bed of desiccant which adsorb the water vapor and aerosols. The silica gel desiccant beads will reduce the humidity down to a -40°F pressure dew point. After the moisture has been removed, the dry air passes through a sintered bronze filter element (eliminating dust downstream), up the tube and out the outlet port.

As the desiccant becomes saturated with moisture, the dew point will begin to rise. This is evident when the blue silica gel desiccant beads in the sight glass change to pink, indicating the need for desiccant replacement. Simply remove the flange and bowl and replace with new desiccant or regenerate saturated desiccant by heating to 275°F.

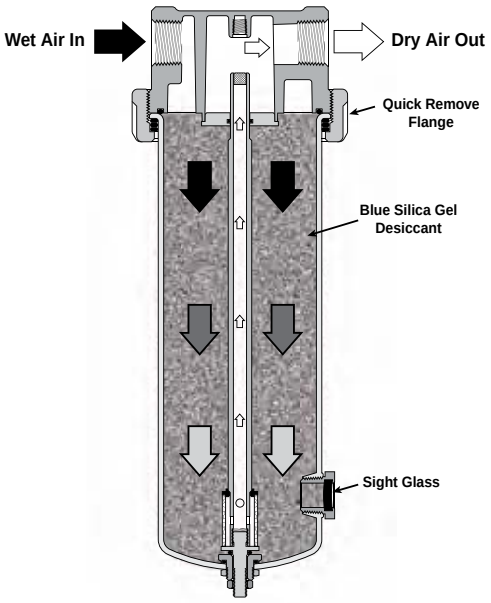


## Installation Tips

- Always place a moisture separator/particulate filter (i.e., F602) to remove bulk moisture **and** a coalescing filter (i.e., F701) to remove oil upstream of desiccant dryer. Desiccant coated with oil will not adsorb oil.
- Automatic drains should be used in prefilters
- A spring ball check valve should be installed at the dryer inlet to maximize the life of the desiccant.

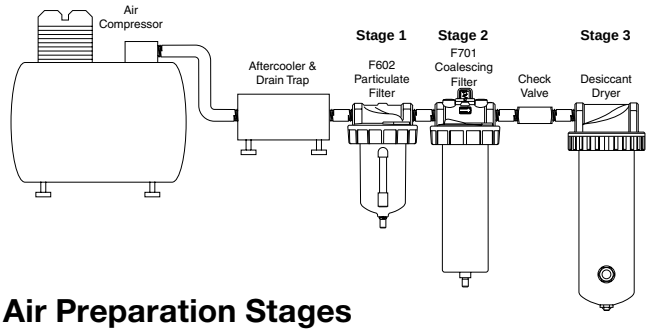


## Air Preparation Stages

| Stage | Type of Filter | Example | Function Served in Compressed Air System |
|---|---|---|---|
| 1 | Particulate / Moisture Removal Filters | F602 | Removes bulk moisture & particulate matter [1] |
| 2 | Coalescing Filters | F701 | Removes fine particulate matter, moisture droplets and aerosols, but NOT vapor[2] |
| 3 | Desiccant Dryer | DD15, DD30, DD60 | Removes moisture vapor[3] |

**Notes:**
1. Removes approx 75% of moisture
2. Removes approx 99.97% efficient in removing oil & water aerosols >.01 micron
3. Provides pressure dew point of -40° F with unsaturated desiccant

## Desiccant Dryers Kits & Accessories

**Desiccant - Environmentally Friendly Silica Gel 100% Indicating –**
DD15 ..... DRP-14-447/003
DD30 ..... DRP-14-447/006
DD60 ..... DRP-14-447/012

**Flow Tube Repair Kit (Tube, Filter Element(s), Adaptor)**
DD15 ..... RKDD15-02-06
DD30 ..... RKDD30-03-08
DD60 ..... RKDD60-03-08

**Mounting Brackets (Recommended for DD15 & DD30 only) –**
1/4 Inch Pipe Size (Pair of Pipe Mounted Brackets) ... SA200YW57
1 Inch Pipe Size (Pair of Pipe Mounted Brackets)..... SA200CW57

**Spring Check Valve for Inlet (250 PSIG max.) –**
(Maximizes Life of Desiccant)
1/4 Inch NPT ..... 003393001
3/8 Inch NPT ..... 003393002
1/2 Inch NPT ..... 003393003
3/4 Inch NPT ..... 003393004

## Specifications

**Desiccant Capacity (Desiccant must be ordered separately) –**
DD15 ..... 2.5 lb.
DD30 ..... 5 lb.
DD60 ..... 10 lb.

**Filter Element Rating –**
DD15, DD30 ..... 90 micron
DD60 ..... 40 micron

**Pressure & Temperature Ratings –**
Optimum working temperature ..... Below 100° F
Pressure Range ..... 0 to 300 PSIG
Temperature Range ..... 32°F to 180°F

**Weight (Housing Only) –**
DD15 (add 2.5 lb for weight full) ..... 8 lb.
DD30 (add 5 lb for weight full) ..... 13 lb.
DD60 (add 10 lb for weight full) ..... 20 lb.

## Materials of Construction

**Bowl –**
DD15, DD30 ..... Aluminum
DD60 ..... Steel

**Flow Tube** ..... CPVC

**Filter Elements** ..... Sintered Bronze

**Head & Flange Ring** ..... Zinc

**Other Hardware** ..... Brass

**Seals** ..... Buna-N

**Sight Glass** ..... Glass & Steel



Parker Hannifin Corporation
Pneumatic Division
Richland, Michigan
www.wattsfluidair.com

# Regulators

## Regulation

An air regulator is a specialized control valve. It reduces upstream supply pressure level to a specified constant downstream pressure.

Pneumatic equipment that is operated at higher-than-recommended pressure wastes the energy to generate that pressure. It creates a potential safety hazard, and probably will wear out prematurely. Operating below specified pressure can cause the machine to fail to meet design performance specifications. Therefore, precise air pressure control is essential to efficient operation of air-powered equipment.

## How to Select the Proper Regulator

While regulator bodies are generally constructed of die-cast metal, other external parts may be either metal or plastic. Remember that all-metal construction is best for tough applications, where abuse is likely to occur, but plastic construction is generally lower in cost. For normal industrial applications, either construction is suitable.

Inlet pressure rating and downstream controlled range, as well as flow capacity, must be determined before selecting a regulator. Port size should match piping size.

Required response time, relieving capability, and type of adjustment are other considerations. Highly sensitive, lightweight diaphragm sensors vs. the slower, but often more durable, piston sensors. Self-relieving vs. non-relieving regulators. T-Handles or knobs as the adjustment mechanism, or air pilot operated regulator which offer remote adjustment. Other choices to be made include gauge, panel mount and other special options.

## Regulator Construction

Regulators are generally constructed using a die-cast metal body. Other external parts, such as the spring cage and bottom plug, may be either metal or plastic. All-metal construction offers more durability in tough applications where abuse is likely to occur, while the plastic construction offers lower cost. For normal industrial applications (temperature range of 40° to 120° F and supply pressure to 300 PSIG), either construction will serve well.

Lightweight diaphragm sensors offer quick response and high sensitivity to air pressure changes. Piston sensors are somewhat slower but may be more durable. Where downstream pressure requirements change rapidly enough to cause regular chatter, slower response may be an advantage.

If the self-relieving feature is not needed for an application, simpler non-relieving regulators are available.

For regulators with an adjustment spring, a -T-Handle or knob provides the external link to the spring on various models.

Pilot-operated regulators substitute air pressure in the chamber above the sensor to provide the reference force. Remote adjustment through a separate pilot regulator thus becomes possible, or the pilot signal can be fed back from a downstream location for precise control.

The balanced inner valve design exposes both sides of the inner valve to essentially the same pressure. This eliminates much of the effect that changes in inlet pressure might have on inner valve position and orifice opening.

## Regulator Operation

In a typical regulator, an inner valve sets the size of an orifice which connects inlet port to outlet port. The sensing element, often a diaphragm or piston mechanically linked to the inner valve, reacts to downstream pressure and a reference force to position the inner valve. The reference force can be a spring, or an air pilot chamber.

The valve is normally open. High pressure air enters and flows through the orifice toward the outlet. Downstream pressure is connected through an aspirator tube to the bottom of the diaphragm. As downstream pressure increases, the diaphragm is forced upward, compressing the adjustment spring. When the diaphragm moves, the inner valve spring pushes the inner valve disc upward to throttle the orifice. If downstream pressure exhausts, the mechanical sequence reverses and the inner valve disc opens the orifice until the set pressure is reached again.

The arrangement of separate diaphragm chamber and aspirator tube accomplishes two purposes. First, the diaphragm is moved out of the potentially abrasive air stream. Second, and more important, if the downstream system calls for high flow, this flow generates a low pressure venturi effect at the end of the aspirator tube and into the diaphragm chamber. The diaphragm therefore reacts more quickly to open the orifice via the inner valve, thereby improving response time to high flow demands.

Some circuits may be subject to downstream-generated high pressure (from high temperatures or heavy vertical loads on cylinders, for example). This high pressure is reduced by a self-relieving feature built into the regulator. The inner valve stem normally blocks a relieving orifice in the center of the diaphragm. If excessive pressure lifts the diaphragm off the stem, air bleeds through the orifice and out the spring cage vent until the system returns to the set pressure.


Parker Hannifin Corporation
Pneumatic Division
Richland, Michigan
www.wattsfluidair.com

# Regulators

## Regulator Comparison Chart

| | | High Precision Regulators | | | Precision Regulator | Standard Regulator |
|---|---|---|---|---|---|---|
| | *Examples →* | **R210** | **R220** | **R230** | **R216** | **R10, R11, R119** |
| **Repeatability / Sensitivity** | Regulator's ability to return to a set pressure after inducing flow. | 0.005 PSIG 1/8" Water Column | 0.005 PSIG 1/8" Water Column | 0.010 PSIG 1/4" Water Column | 0.5 to 1.0 PSIG | 2 to 4 PSIG |
| **Reduced Pressure Variation** | This refers to the regulator's ability to maintain a consistent output pressure when faced with variables such as time, cycling, temperature, supply pressure, flow, etc. | Best | Best | Better | Good | Average |
| **Input Pressure** | Unregulated air pressure going into the regulator | 150 PSIG Max. | 150 PSIG Max. | 250 PSIG Max. | Varies | Varies |
| **Effect of Supply Pressure Variation on Regulated Pressure** | Reduced / set pressure variation when input pressure changes by 100 PSIG | 0.020 PSIG | 0.020 PSIG | 0.100 PSIG | 4 PSIG | Approx. 3 - 6 PSIG |
| **Reduced Pressure Range** | Reduced pressure ranges available | 2-40 PSIG 2-120 PSIG | 2-120 PSIG | 0-2 PSIG 0-30 PSIG 0-60 PSIG 0-150 PSIG | Varies | Varies |
| **Flow Capacity** | Regulator's flow capacity | 14 SCFM | 14 SCFM | 80 SCFM | Varies | Varies |
| **Exhaust (Relief) Capacity** | Regulator's exhaust/relief flow rating when backpressure is introduced from downstream | 3 SCFM | 11 SCFM | 4 SCFM | Low | Low |
| **Overpressure to Relieve** ***Key in cylinder applications** | Regulator's sensitivity to relieve excess downstream pressure over the set pressure. | Best (0.005 PSIG) | Best (0.005 PSIG) | Better (0.010 PSIG) | Good (1 PSIG) | Average (5-10 PSIG) |
| **Constant Bleed** | Does the regulator constantly bleed air to the atmosphere to maintain accuracy? | Yes | Yes | Yes | Varies | No |
| **Size Constraints** | Overall size of regulator | 4.5" H x 2.06" W | 4.5" H x 2.06" W | 5.5" H x 3" W | Varies | Varies |
| **Mounting Constraints** | Mounting options | Panel, Pipe, or Bracket | Panel, Pipe, or Bracket | Panel, Pipe, or Bracket | Panel, Pipe, Bracket, or Modular | Varies |
| **Port Size** | Inlet / Outlet port size | 1/4" | 1/4" | 1/4" or 3/8" | Varies | Varies |

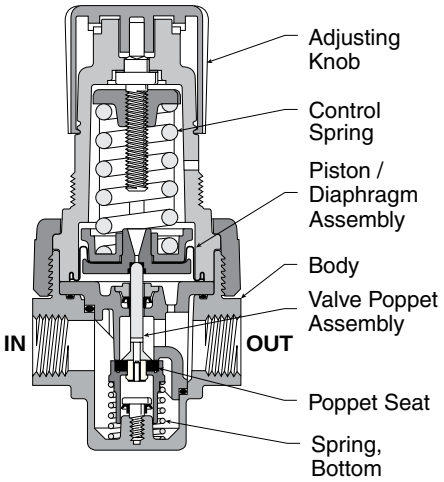


**Compact Regulator**

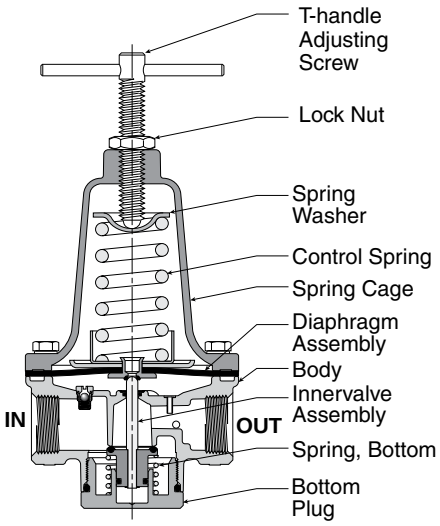


**Standard Regulator**

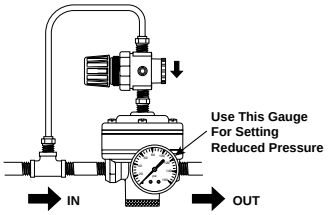


**Pilot Regulator Application**

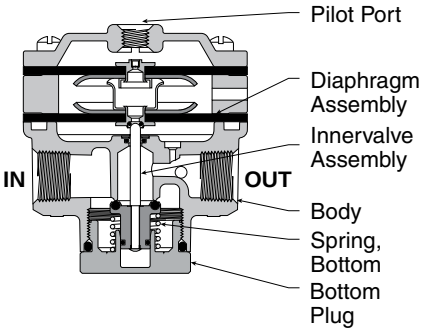


**Pilot Operated Regulator**



**Parker Hannifin Corporation**
Pneumatic Division
Richland, Michigan
www.wattsfluidair.com

# 14R Regulators – Miniature

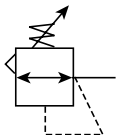

## Features

- Unbalanced poppet standard
- Solid control piston with lip seal for extended life
- Non-rising adjusting knob
- Compact, 2.88 Inch (73.2mm) high by 1.65 Inch (42mm) wide
- Easily serviced
- High flow: 1/8" – 13 SCFM§
  1/4" – 15 SCFM§

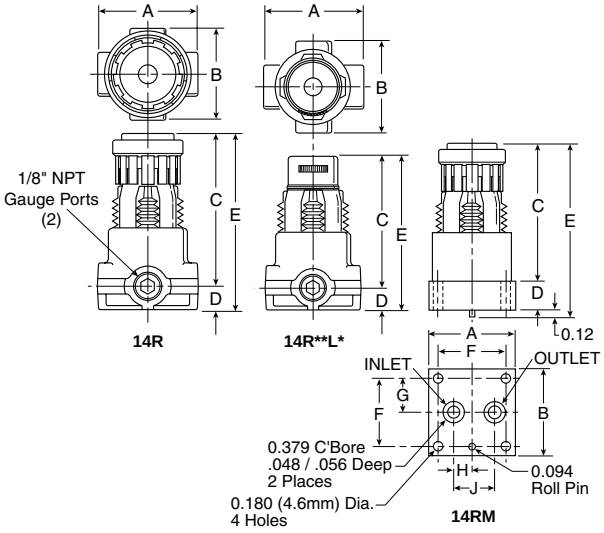


| Port Size | NPT |
|---|---|
| Without Gauge | |
| 1/8" | **14R013F*** |
| 1/4" | **14R113F*** |
| With Gauge | |
| 1/8" | **14R018F*** |
| 1/4" | **14R118F*** |

**Bold Items are Most Popular.**
**For other models refer to ordering information below.**

**NOTE: 1.218 Dia. (31mm) hole required for panel mounting.**

§ SCFM = Standard cubic feet per minute at 100 PSIG inlet, 90 PSIG no flow secondary setting and 10 PSIG pressure drop.

| 14R Regulator Dimensions | | | | | |
|---|---|---|---|---|---|
| **14R** | **A** 1.65 (42) | **B** 1.56 (40) | **C** 2.50 (63,5) | **D** .38 (10) | **E** 2.88 (73) |
| **14R**L*** | **A** 1.65 (42) | **B** 1.56 (40) | **C** 2.28 (57,9) | **D** .38 (10) | **E** 2.68 (68) |
| **14RM** | **A** 1.50 (38) | **B** 1.50 (38) | **C** 2.36 (60) | **D** .50 (13) | **E** 2.98 (73) |
| | **F** 1.188 (30) | **G** .594 (15) | **H** .325 (8) | **J** .725 (18) | |

Inches (mm)

## Ordering Information

| 14R | 1 | 13 | F | * | | | |
|---|---|---|---|---|---|---|---|

**Port Size**

- **0 1/8 Inch Pipe, 1/8 Inch Gauge Port**
- **1 1/4 Inch Pipe, 1/8 Inch Gauge Port**
- B 1/4 Inch Pipe, 1/4 Inch Gauge Port
- C 1/8 Inch Pipe, No Gauge Port
- M Manifold Mounting

**Pressure Range**

| Without Gauge | | | |
|---|---|---|---|
| Yellow Knob | | Black Knob | |
| 10 | 30 PSIG | B0 | 30 PSIG |
| 11 | 60 PSIG | B1 | 60 PSIG |
| 12 | 15 PSIG | B2 | 15 PSIG |
| **13** | **125 PSIG** | B3 | 125 PSIG |
| With Gauge | | | |
| 15 | 30 PSIG | B5 | 30 PSIG |
| 16 | 60 PSIG | B6 | 60 PSIG |
| 17 | 15 PSIG | B7 | 15 PSIG |
| 18 | 125 PSIG | B8 | 125 PSIG |

**Relief**

- **F Relieving**
- G Non-Relieving
- H Low Temp. Relieving
- J Low Temp. Non-Relieving

**Engineering Level**

- * Will be Entered at Factory

**Port Type**

| Blank | NPT |
|---|---|
| 1 | BSPP |
| 2 | BSPT |

**Options**

| Blank | No Options |
|---|---|
| L† | Preset Non-Adjustable |
| P† | Preset Adjustable |
| S† | Pressure Limiter Max. Adjustable |
| T | Pressure Limiter Max. Non-Adjustable |

† Inlet Pressure is 100 PSIG. For other pressures, contact factory.

**Preset / Pressure Limited**

| Blank | None |
|---|---|
| XXX* | Preset Pressure |
| XXX* | Pressure Limited |

* Available Preset / Pressure Limited Range, 10 to 90 PSIG in 5 PSIG increments. For higher pressures, contact factory.
(Example: 065 = 65 PSIG)

**Spring Type by Preset / Limited Pressure:**
For Preset / Limited Pressure 10 to 25 use 30 PSI Spring
For Preset / Limited Pressure 26 to 50 use 60 PSI Spring
For Preset / Limited Pressure 51 to 90 use 125 PSI Spring

**BOLD ITEMS ARE MOST POPULAR.**



**Parker Hannifin Corporation**
Pneumatic Division
Richland, Michigan
www.wattsfluidair.com

## Technical Information

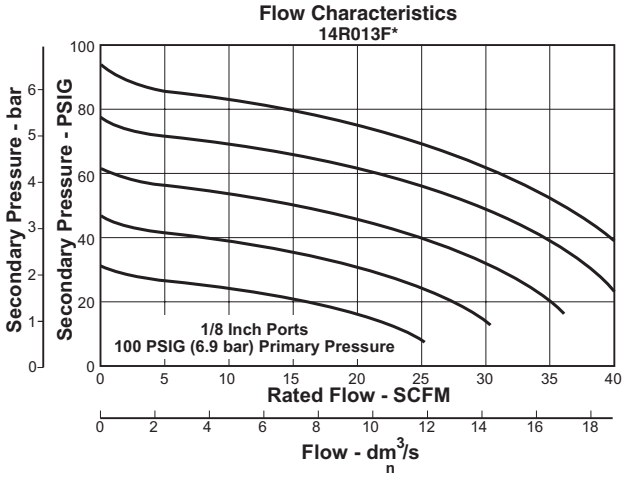


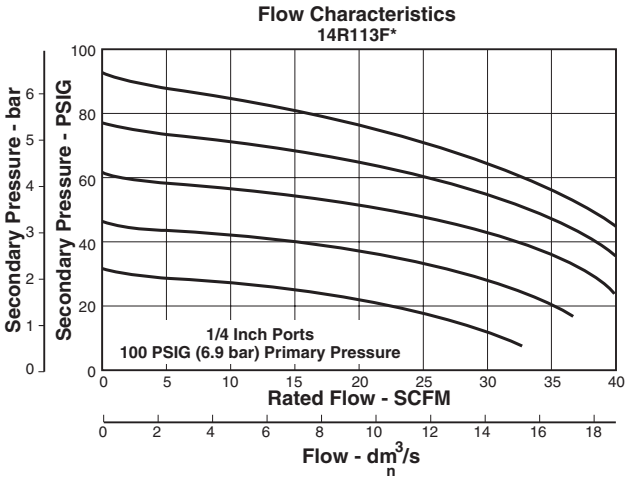


**⚠ WARNING**

**Product rupture can cause serious injury.**
**Do not connect regulator to bottled gas.**
**Do not exceed maximum primary pressure rating.**

**⚠ CAUTION:**

**REGULATOR PRESSURE ADJUSTMENT –** The working range of knob adjustment is designed to permit outlet pressures within their full range. Pressure adjustment beyond this range is also possible because the knob is not a limiting device. This is a common characteristic of most industrial regulators, and limiting devices may be obtained only by special design.
For best performance, regulated pressure should always be set by increasing the pressure up to the desired setting.

## 14R Regulator Kits & Accessories

**Bonnet Assembly Kit** ..... L01369

**Gauges –** 30 PSIG, 1/8" NPT (0 to 2.1 bar) ..... K4515N18030
60 PSIG, 1/8" NPT (0 to 4.1 bar) ..... K4515N18060
160 PSIG, 1/8" NPT (0 to 11.0 bar) ..... K4515N18160
60 PSIG, 1/4" NPT (0 to 4.1 bar) ..... K4520N14060
160 PSIG, 1/4" NPT (0 to 11.0 bar) ..... K4520N14160

**Mounting Bracket Kit*** (Includes Panel Mount Nut) ..... PS417B

**Panel Mount Nuts* –** Plastic ..... P78652
Metal ..... P01531

**Poppet / Piston Kits –** Unbalanced Non-Relieving ..... PS428
Unbalanced Relieving ..... PS426

**Springs –** 1-15 PSIG Range (Yellow) ..... P01176
1-30 PSIG Range (Black) ..... P01175
1-60 PSIG Range (White) ..... P01174
2-125 PSIG Range (Gold) ..... P01173

*Tighten panel mount nut 2.8 to 3.4 Nm (25 to 30 in-lbs) of torque.

## Specifications

**Gauge Ports (2)** ..... 1/8 or 1/4 Inch
(Can be used for Full Flow)

**Port Threads** ..... 1/8, 1/4 Inch

**Pressure & Temperature Ratings –** .... 0 to 300 PSIG (0 to 20.7 bar)
32°F to 125°F (0°C to 52°C)

**Secondary Pressure Ranges –**
Standard Pressure ..... 2 to 125 PSIG (0 to 8.6 bar)
Medium Pressure ..... 1 to 60 PSIG (0 to 4.1 bar)
Medium Pressure ..... 1 to 30 PSIG (0 to 2.1 bar)
Low Pressure ..... 1 to 15 PSIG (0 to 1 bar)

**Weight –** 14R, 14RM, 14**L* ..... 0.3 lb. (0.14 kg)

## Materials of Construction

**Adjusting Nut** ..... Brass

**Adjusting Stem & Spring** ..... Steel

**Body** ..... Zinc

**Bonnet, Seat, Piston & Valve Poppet** ..... Plastic

**Seals** ..... Nitrile



**Parker Hannifin Corporation**
Pneumatic Division
Richland, Michigan
www.wattsfluidair.com

# R34 Regulators – Miniature

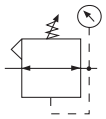
Relieving

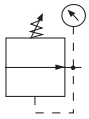
Non-Relieving

**R344-02C**

**R342-0MC**

## Features

- Diaphragm operated for fast operation
- Large Diaphragm to valve area ratio for precise regulation and high flow capacity
- Balanced valve design for precise regulation
- Available in 2 or 4 port design
- Available with a manifold mount to minimize plumbing
- Suitable for low temperature applications
- Non-rising adjusting knob
- 1/8" - 17 SCFM*
- 1/4" - 19 SCFM*

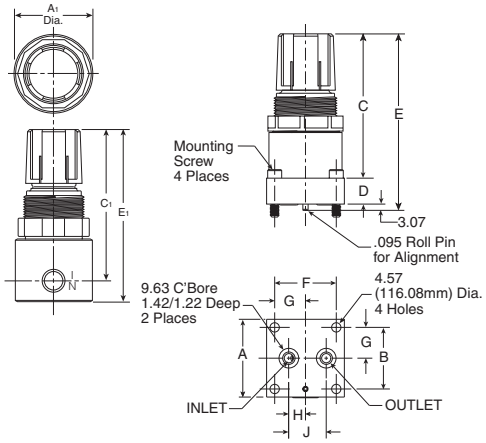


| R34 Miniature Regulator Dimensions | | | | |
|---|---|---|---|---|
| **A** 1.50 (38.1) | **A1** 1.54 (39.2) | **B** 1.188 (30.18) | **B1** 1.56 (39.6) | **C** 2.75 (69.9) |
| **C1** 2.70 (68.6) | **D** .50 (12.7) | **E** 3.25 (82.6) | **E1** 3.25 (82.6) | **F** 1.20 (30.5) |
| **G** .60 (15.2) | **H** .32 (8.1) | **J** .73 (18.5) | | |

| Model Type | Port Size | Without Gauge | Without Gauge | Without Gauge | With Gauge | With Gauge | With Gauge |
|---|---|---|---|---|---|---|---|
| | | 0 to 30 psig (0.0 to 2.1 bar) | 0 to 60 psig (0.0 to 4.1 bar) | 0 to 125 psig (0.0 to 8.6 bar) | 0 to 30 psig (0.0 to 2.1 bar) | 0 to 60 psig (0.0 to 4.1 bar) | 0 to 125 psig (0.0 to 8.6 bar) |
| Relieving | 1/8" | R344-01A | R344-01B | R344-01C | R344-01AG | R344-01BG | R344-01CG |
| | 1/4" | R344-02A | R344-02B | **R344-02C** | R344-02AG | R344-02BG | **R344-02CG** |
| | Manifold Mount | R342-0MA | R342-0MB | **R342-0MC** | –– | –– | –– |

**Standard part numbers shown bold.**
**For other models refer to ordering information below.**
* SCFM = Standard cubic feet per minute at 100 psig inlet, 90 psig no flow secondary setting and 10 psig pressure drop.

## Ordering Information

| R34 | 4 | – | 02 | C | G | | |
|---|---|---|---|---|---|---|---|

**Number of Ports**
- 2 2 Ports
- **4* 4 Ports**

* Not Available with Manifold Mount.

**Thread**
- **- NPT**
- G BSPP

**Port**
- 01 1/8"
- **02 1/4"**
- **0M Manifold Mount**

**Pressure Range**
- A 0-30 PSI
- B 0-60 PSI
- **C 0-125 PSI**

**Options**
- Blank No Options
- **G Gauge**
- K Non-Relieving Diaphragm
- P Panel Mount Nut

**Options**
- **Blank No Options**
- L† Preset Non-Adjustable
- M† Preset Adjustable

† Inlet Pressure is 100 psig. For other pressures, contact factory.

**Preset**
- **Blank None**
- XXX* Preset Pressure

* Available Preset Range, 10 to 90 psig in 5 psig increments. For higher pressures, contact factory. (Example: 065 = 65 psig)

**BOLD ITEMS ARE MOST POPULAR.**



**Parker Hannifin Corporation**
Pneumatic Division
Richland, Michigan
www.wattsfluidair.com

## Technical Information

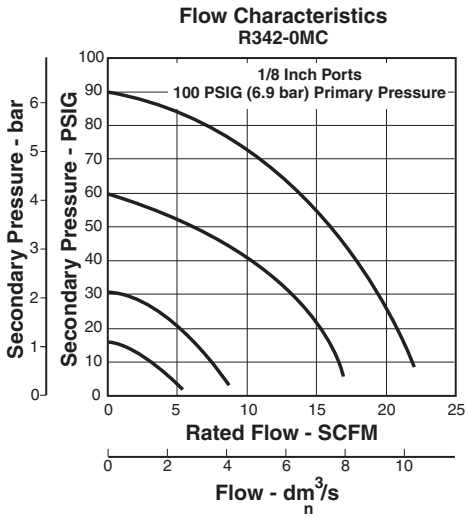


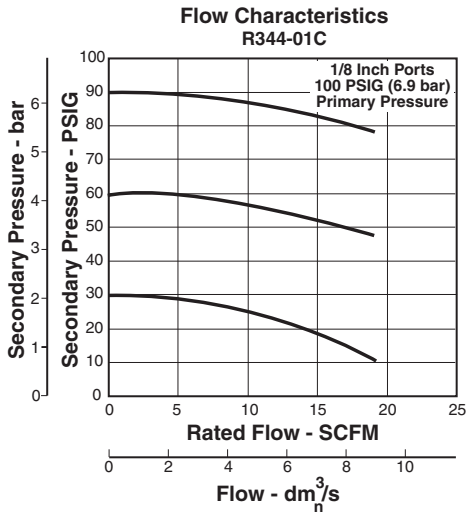


**⚠ CAUTION:**

**REGULATOR PRESSURE ADJUSTMENT –** The working range of knob adjustment is designed to permit outlet pressures within their full range. Pressure adjustment beyond this range is also possible because the knob is not a limiting device. This is a common characteristic of most industrial regulators, and limiting devices may be obtained only by special design.
For best performance, regulated pressure should always be set by increasing the pressure up to the desired setting.

**⚠ WARNING**

**Product rupture can cause serious injury.**
**Do not connect regulator to bottled gas.**
**Do not exceed maximum primary pressure rating.**

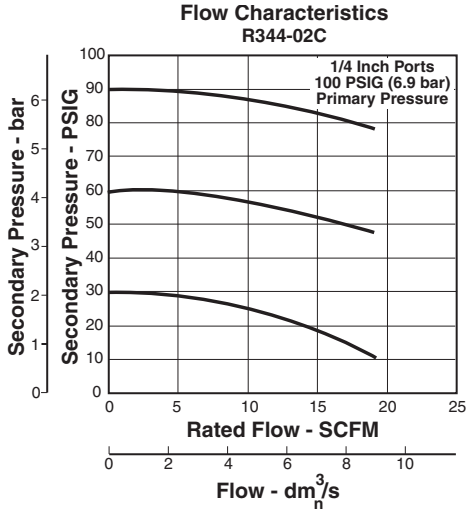


## R34 Regulator Kits and Accessories

**Diaphragm Assembly –** Non-relieving ..... GRP-96-726
Relieving ..... GRP-96-725

**Spring, Regulating –** 0 to 30 psig (0 to 2.1 bar)..... GRP-95-111
0 to 60 psig (0 to 4.1 bar)..... GRP-96-718
0 to 125 psig (0 to 8.6 bar)..... GRP-96-717

**Panel Mount Nut –** Aluminum ..... R05x51-A
Plastic..... R05x51-P

**Mounting Bracket Kit –** (Includes Panel Mount Nut).....SA161x57

**Gauges –** 0 to 60 psig (0 to 4.1 bar),
1-1/2" Dial Face, 1/8 NPT, CBM ..... K4515N18060
0 to 160 psig (0 to 11.0 bar),
1-1/2" Dial Face, 1/8 NPT, CBM ..... K4515N18160

**Tamperproof Knob Kit**.....P31KB00AT

## Materials of Construction

**Body**..... Aluminum
**Bonnet** ..... Acetal
**Diaphragm & Seals**..... Nitrile
**Valve Assembly**..... Brass
**Springs** ..... Steel
**Panel Nut**..... Acetal

## Specifications

**Operating Temperature** ..... -40° F to 150°F (-40° C to 65.5°C)
**Supply Pressure** ..... 300 psig Maximum (20.4 bar)
**Port Threads**..... 1/8, 1/4 Inch
**Gauge Ports** .....(2) Std 1/8 Inch
(No Gauge Port Version Available)
**Weight**.....25 lbs. (0.11 kg)



**Parker Hannifin Corporation**
Pneumatic Division
Richland, Michigan
www.wattsfluidair.com

# R24, R25 Regulators – Miniature (Air / Water Service)

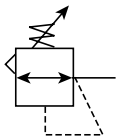

## Features

- Lightweight plastic body
- Constructed with a combination of N.S.F. and F.D.A. approved materials
- Unbalanced poppet standard
- Non-rising, push-to-lock adjusting knob
- Compact, 3.10 inch (79mm) high by 1.60 inch (41mm) wide
- Lightweight
- Diaphragm operated

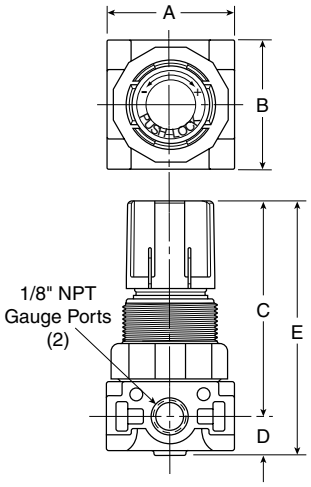


| Port Size | NPT | |
|---|---|---|
| | Air Service Relieving | Water Service Non-Relieving |
| | Relieving, 0-125 Reduced Pressure, Without Gauge | |
| 1/8" | **R25-01C** | **R24-01CK** |
| 1/4" | **R25-02C** | **R24-02CK** |

**Bold Items are Most Popular.**
**For other models refer to ordering information below.**

NOTE: 1.250 Dia. (31.8mm) hole required for panel mounting.

| R24, R25 Regulator Dimensions | | |
|---|---|---|
| **A** 1.60 (41) | **B** 1.60 (41) | **C** 2.61 (66) |
| **D** 0.49 (13) | **E** 3.10 (79) | |

Inches (mm)

## Ordering Information

**R25 — 02 C**

| Series | Port Size | Pressure Range | Relief |
|---|---|---|---|
| R24 EPDM Elastomers (Water) | **01 1/8 Inch** | **A 0 to 25 psig (0 to 2 bar)** | **Blank Relieving** |
| **R25 Buna Elastomers (Air)** | **02 1/4 Inch** | **B 0 to 60 psig (0 to 4 bar)** | K Non-Relieving (For Water Service) |
| | | **C 0 to 125 psig (0 to 8 bar)** | P Panel Mount Nut |

**BOLD ITEMS ARE MOST POPULAR.**



**Parker Hannifin Corporation**
Pneumatic Division
Richland, Michigan
www.wattsfluidair.com

## Technical Information

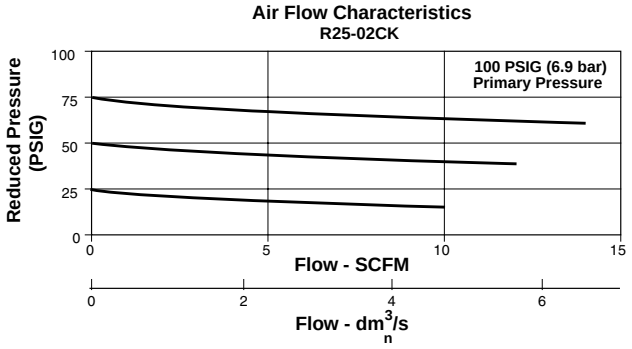


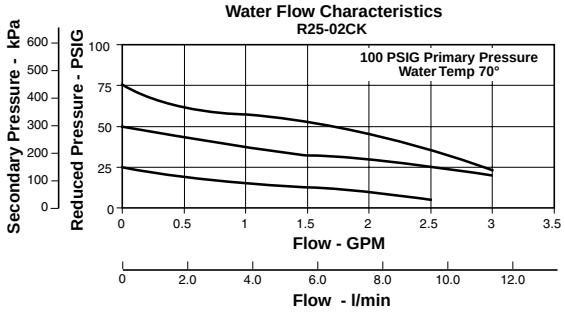


**⚠ WARNING**

**Product rupture can cause serious injury.**
**Do not connect regulator to bottled gas.**
**Do not exceed maximum primary pressure rating.**

**⚠ CAUTION:**

**REGULATOR PRESSURE ADJUSTMENT –** The working range of knob adjustment is designed to permit outlet pressures within their full range. Pressure adjustment beyond this range is also possible because the knob is not a limiting device. This is a common characteristic of most industrial regulators, and limiting devices may be obtained only by special design.
For best performance, regulated pressure should always be set by increasing the pressure up to the desired setting.

## R24, R25 Regulator Kits and Accessories

**Panel Mount Nut –**
- Plastic ..... R05X51-P
- Aluminum ..... R05X51-A

**Mounting Bracket and Nut** ..... SA161X57

**Service Kits –**
- Relieving (Buna) ..... RKR25Y
- Non-Relieving (Buna) ..... RKR25KY
- Relieving (EPDM) ..... RKR24Y
- Non-Relieving (EPDM) ..... RKR24KY

**Springs –**
- 0-25 psig Spring ..... SPR-375-1
- 0-60 psig Spring ..... SPR-376
- 0-125 psig Spring ..... SPR-377

## Specifications

**Gauge Ports (2)** ..... 1/8 Inch (Can be used for full flow)

**Pressure Rating –** Maximum Inlet Pressure 150 psig..... (10.0 bar)

**Port Threads** ..... 1/8, 1/4 Inch

**Temperature Rating** ..... 40°F to 125°F (4°C to 52°C)

**Weight** ..... 0.25 lb. (0.11 kg)

## Materials of Construction

**Adjusting Screw** ..... Steel

**Body** ..... Acetal

**Bonnet and Seat** ..... Acetal

**Diaphragm (R25)** ..... Buna N

**Diaphragm (R24)** ..... EPDM

**Seals (R25)** ..... Buna N

**Seals (R24)** ..... EPDM

**Springs** ..... Stainless Steel

**Valve Poppet (R25)** ..... Buna N

**Valve Poppet (R24)** ..... EPDM



**Parker Hannifin Corporation**
Pneumatic Division
Richland, Michigan
www.wattsfluidair.com

# R45, R46 Regulators – Miniature (Air / Water Service)

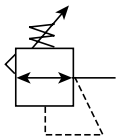

## Features

- Lightweight plastic body
- Constructed with a Combination of N.S.F. and F.D.A. approved materials
- Unbalanced poppet standard
- Non-rising, push-to-lock adjusting knob
- Compact, 3.43 inch (87.1mm) high by 2.06 inch (52.3mm) wide
- Lightweight
- Diaphragm operated

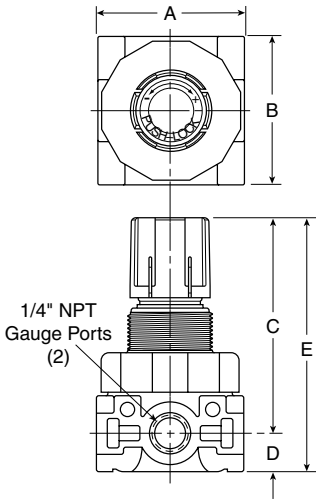


| Port Size | NPT | |
|---|---|---|
| | Air Service Relieving | Water Service Non-Relieving |
| | Relieving, 0-125 Reduced Pressure, Without Gauge | |
| 1/4" | **R45-02C** | **R46-02CK** |
| 3/8" | **R45-03C** | **R46-03CK** |

**Bold Items are Most Popular.**
**For other models refer to ordering information below.**

NOTE: 1.250 Dia. (31.8mm) hole required for panel mounting.

| R45, R46 Regulator Dimensions | | |
|---|---|---|
| **A** 2.06 (52) | **B** 2.06 (52) | **C** 2.90 (74) |
| **D** 0.53 (14) | **E** 3.43 (87) | |

Inches (mm)

## Ordering Information

**R45 — 02 C**

| Series | Port Size | Pressure Range | Relief |
|---|---|---|---|
| R45 EPDM Elastomers (Air) | **02 1/4 Inch** | **A 0 to 25 psig (0 to 2 bar)** | **Blank Relieving** |
| **R46 EPDM Elastomers (Water)** | **03 3/8 Inch** | **B 0 to 60 psig (0 to 4 bar)** | K Non-Relieving (For Water Service) |
| | | **C 0 to 125 psig (0 to 8 bar)** | P Panel Mount Nut |

**BOLD ITEMS ARE MOST POPULAR.**



**Parker Hannifin Corporation**
Pneumatic Division
Richland, Michigan
www.wattsfluidair.com

## Technical Information

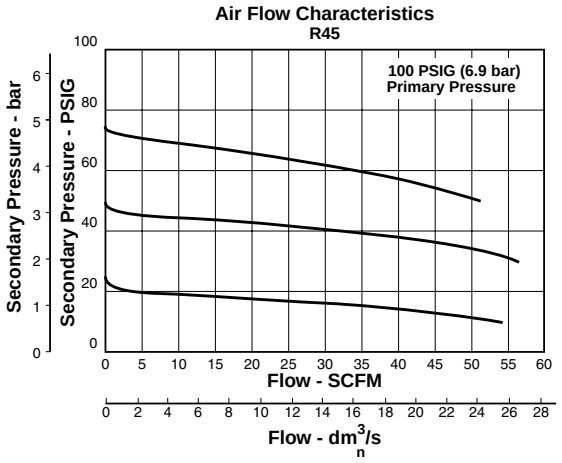


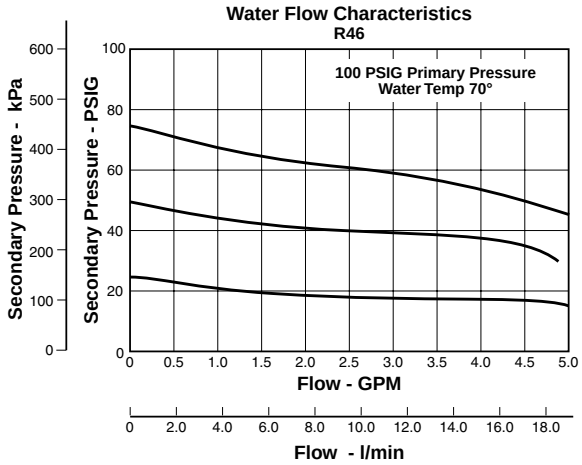


**⚠ WARNING**

**Product rupture can cause serious injury.**
**Do not connect regulator to bottled gas.**
**Do not exceed maximum primary pressure rating.**

**⚠ CAUTION:**

**REGULATOR PRESSURE ADJUSTMENT –** The working range of knob adjustment is designed to permit outlet pressures within their full range. Pressure adjustment beyond this range is also possible because the knob is not a limiting device. This is a common characteristic of most industrial regulators, and limiting devices may be obtained only by special design.
For best performance, regulated pressure should always be set by increasing the pressure up to the desired setting.

## R45, R46 Regulator Kits and Accessories

**Panel Mount Nut –**
- Plastic ..... R05X51
- Aluminum ..... R05X51-A

**Mounting Bracket and Nut** ..... SA161X57

**Service Kits –**
- Relieving ..... RKR45Y
- Non-Relieving ..... RKR45KY

**Springs –**
- 0-25 psig Spring ..... SPR-346
- 0-60 psig Spring ..... SPR-47
- 0-125 psig Spring ..... SPR-48

## Specifications

**Gauge Ports (2)** ..... 1/4 Inch
Can be used for full flow)

**Pressure Rating –** Maximum Inlet Pressure 150 psig..... (10.0 bar)

**Port Threads** ..... 1/4, 3/8 Inch

**Temperature Rating** ..... 40°F to 125°F (4°C to 52°C)

**Weight** ..... 0.38 lb. (0.17 kg)

## Materials of Construction

**Adjusting Screw** ..... Steel

**Body** ..... Acetal

**Bonnet and Seat** ..... Acetal

**Diaphragm (R45)** ..... Buna N

**Diaphragm (R46)** ..... EPDM

**Seals (R45)** ..... Buna N

**Seals (R46)** ..... EPDM

**Springs** ..... Stainless Steel

**Valve Poppet (R45)** ..... Buna N

**Valve Poppet (R46)** ..... EPDM



**Parker Hannifin Corporation**
Pneumatic Division
Richland, Michigan
www.wattsfluidair.com

# R364, R374 Regulators – Miniature

## Features

- High flow and high sensitivity
- Constant bleed option for semi-precision applications
- Can be used for water service (non-relieving)
- Unbalanced poppet standard
- Diaphragm operated for fast response
- Non-rising adjusting knob
- Stainless steel version available (see stainless steel section of catalog)
- High flow: 10 SCFM§ (Air)
  1.25 GPM (Water)

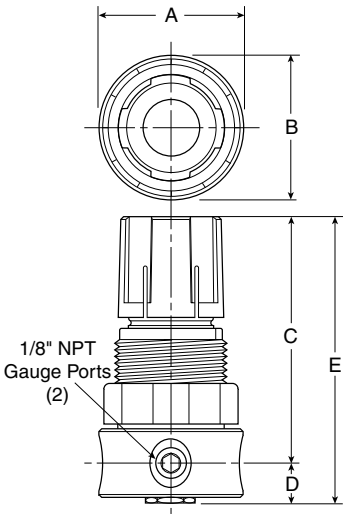


| Port Size | NPT |
|---|---|
| **Brass** | |
| 1/8" | **R364-01C** |
| 1/4" | **R364-02C** |
| **Aluminum** | |
| 1/8" | **R374-01C** |
| 1/4" | **R374-02C** |

**Standard part numbers shown bold.**
**For other models refer to ordering information below.**

NOTE: 1.250 Dia. (31.8mm) hole required for panel mounting.

§ SCFM = Standard cubic feet per minute at 100 PSIG inlet, 75 PSIG no flow secondary setting and 25% pressure drop.

| R364, R374 Regulator Dimensions | | |
|---|---|---|
| **A** 1.56 (39.7) | **B** 1.56 (39.7) | **C** 2.56 (65.1) |
| **D** 0.50 (12.7) | **E** 3.06 (77.8) | |

Inches (mm)

## Ordering Information

| R | 364 | — | 01 | C | G | | | /** |
|---|---|---|---|---|---|---|---|---|

**Series**
- **R364 Brass**
- **R374 Aluminum**

**Port Threads**
- **– NPT**
- G BSPP

**PortSize**
- **01 1/8 Inch**
- **02 1/4 Inch**

**Reduced Pressure Range**
- **A 0-25 PSIG**
- **B 0-60 PSIG**
- **C 0-125 PSIG**

**Options**
- **G Gauge**
- K Non-Relieving
- P Panel Mount Nut
- T Tamperproof
- X64 Fluorocarbon O-Rings and Diaphragm
- X42 Constant Bleed Innervalve
- X21 High Flow Innervalve
- X10 Max. Pressure Limiting Adjusting Screw
- X82 Brass Spring Cage / Adjusting Screw

**Pressure Preset Options**
- **Blank No Options**
- L† Preset Non-Adjustable
- P† Preset Adj.
- Q† Preset Tamperproof Adjustable
- S† Pressure Limiter Max. Adjustable
- T† Pressure Limiter Max. Non- Adj.

† Inlet Pressure is 100 PSIG. For other pressures, contact factory.

**Engineering Change Designator**
- Will be entered at factory.

**Preset / Pressure Limited**
- **Blank None**
- XXX* Preset Pressure
- XXX* Pressure Limited

* Available Preset / Pressure Limited Range, 10 to 90 PSIG in 5 PSIG increments. For higher pressures, contact factory.
(Example: 065 = 65 PSIG)

**BOLD ITEMS ARE MOST POPULAR.**



**Parker Hannifin Corporation**
Pneumatic Division
Richland, Michigan
www.wattsfluidair.com

## Technical Information

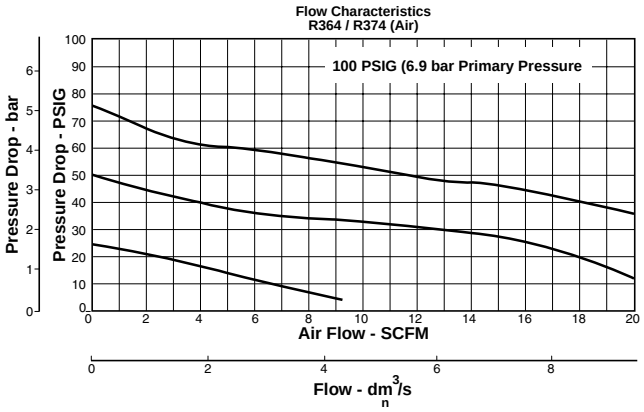


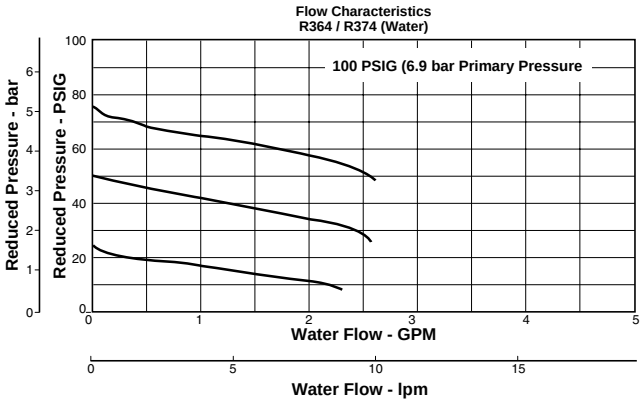


**⚠ WARNING**

**Product rupture can cause serious injury.**
**Do not connect regulator to bottled gas.**
**Do not exceed maximum primary pressure rating.**

**⚠ CAUTION:**

**REGULATOR PRESSURE ADJUSTMENT –** The working range of knob adjustment is designed to permit outlet pressures within their full range. Pressure adjustment beyond this range is also possible because the knob is not a limiting device. This is a common characteristic of most industrial regulators, and limiting devices may be obtained only by special design.
For best performance, regulated pressure should always be set by increasing the pressure up to the desired setting.

## R364, R374 Regulator Kits & Accessories

**Gauges –** 1-1/2" Dial Size, 1/8" Back Connection
0 to 60 PSIG (0 to 400 kPa)..... K4515N18060

1-1/2" Dial Size, 1/8" Back Connection
0 to 160 PSIG, (0 to 1100 kPa)..... K4515N18160

**Mounting Bracket Kit** .....SA161X57
(Includes Panel Mount Nut)

**Panel Mount Nut –** Plastic.....R05X51-P
Aluminum.....R05X51-A

**Spring Cage & Knob** .....CKR364Y

**Spring Cage Kit (Tamperproof)** .....CKR364T

**Repair Kits –**
Standard Nitrile –
Non-Relieving Diaphragm, Valve Assembly ..... RKR163Y
Relieving Diaphragm, Valve Assembly ..... RKR164Y

Fluorocarbon –
Non-Relieving Diaphragm, Valve Assembly ..... RKR164KX64
Relieving Diaphragm, Valve Assembly ..... RKR164X64

## Specifications

**Gauge Ports (2)** ..... 1/8 Inch

**Port Threads** ..... 1/8, 1/4 Inch

**Primary Pressure Rating** ..... 2 to 125 PSIG (-15 to 8.5 bar)

**Supply Pressure** ..... 300 PSIG Maximum (20.4 bar)

**Temperature Rating** ..... 40°F to 125°F (4.4°C to 52°C)

**Weight –** Brass Body ..... 0.5 lb. (0.23 kg) / Unit
25 lb. (11.34 kg) / 48-Unit Master Pack

Aluminum Body ..... 0.25 lb. (0.11 kg) / Unit
15 lb. (6.80 kg) / 48-Unit Master Pack

## Materials of Construction

**Adjusting Screw** ..... Steel

**Body –** R364..... Brass
R374..... Aluminum

**Springs –** Adjusting..... Steel
Bottom .....Stainless Steel

**Spring Cage** ..... Acetal

**Bottom Plug, Innervalve, Diaphragm Buttom** ..... Brass



**Parker Hannifin Corporation**
Pneumatic Division
Richland, Michigan
www.wattsfluidair.com

# 15R Regulators – Economy

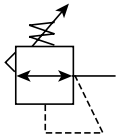

## Features

- Solid control piston with resilient seat for service-free operation
- Non-rising “locking” adjusting knob
- Compact, 3.30 inch (84mm) high by 2.12 inch (54mm) wide
- Easily serviced
- High flow: 1/4" – 21 SCFM§
  3/8" – 28 SCFM§

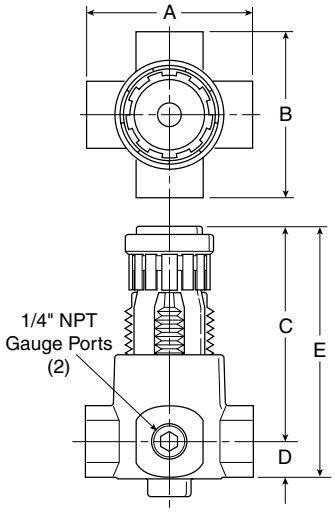


| Port Size | NPT |
|---|---|
| Without Gauge | |
| 1/4" | **15R113F*** |
| 3/8" | **15R213F*** |
| With Gauge | |
| 1/4" | **15R118F*** |
| 3/8" | **15R218F*** |

**Standard part numbers shown bold.**
**For other models refer to ordering information below.**

NOTE: 1.218 Dia. (31mm) hole required for panel mounting.

§ SCFM = Standard cubic feet per minute at 100 PSIG inlet, 90 PSIG no flow secondary setting and 10 PSIG pressure drop.

| 15R Regulator Dimensions | | |
|---|---|---|
| **A** 2.12 (54) | **B** 2.00 (51) | **C** 2.60 (66) |
| **D** 0.70 (18) | **E** 3.30 (84) | |

Inches (mm)

## Ordering Information

| 15R | 1 | 13 | F | * |
|---|---|---|---|---|

**Port Size**
- **1 1/4 Inch**
- **2 3/8 Inch**

**Pressure Range**

Without Gauge
- 10 30 PSIG
- 11 60 PSIG
- 12 15 PSIG
- **13 125 PSIG**

With Gauge
- 15 30 PSIG
- 16 60 PSIG
- 17 15 PSIG
- **18 125 PSIG**

**Relief**
- **F Relieving**
- G Non-Relieving
- H Low Temp. Relieving
- J Low Temp. Non-Relieving

**Engineering Level**
- * Will be Entered at Factory

**BOLD ITEMS ARE MOST POPULAR.**



**Parker Hannifin Corporation**
Pneumatic Division
Richland, Michigan
www.wattsfluidair.com

## Technical Information

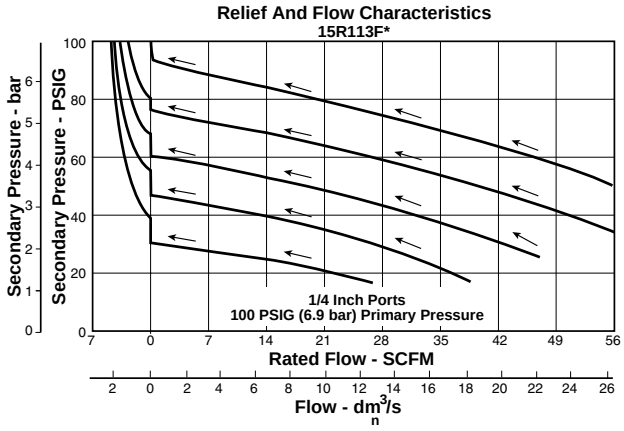


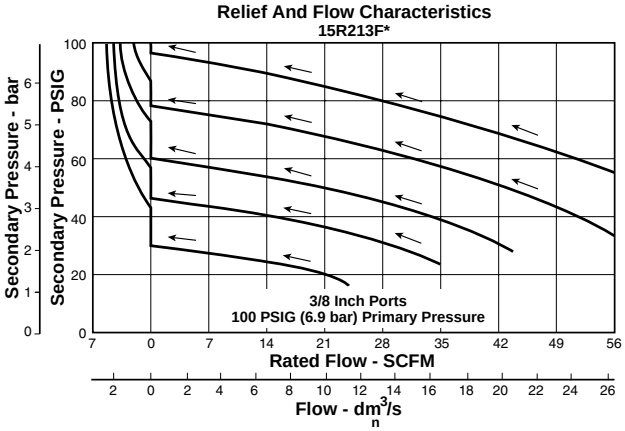


**⚠ WARNING**

**Product rupture can cause serious injury.**
**Do not connect regulator to bottled gas.**
**Do not exceed maximum primary pressure rating.**

**⚠ CAUTION:**

**REGULATOR PRESSURE ADJUSTMENT –** The working range of knob adjustment is designed to permit outlet pressures within their full range. Pressure adjustment beyond this range is also possible because the knob is not a limiting device. This is a common characteristic of most industrial regulators, and limiting devices may be obtained only by special design.
For best performance, regulated pressure should always be set by increasing the pressure up to the desired setting.

## 15R Regulator Kits & Accessories

**Body Service Kit – Unbalanced** ..... PS424B
**Bonnet Assembly Kit** ..... L01369
**Gauges –** 30 PSIG, 1/8" NPT (0 to 2.1 bar) ..... K4515N18030
60 PSIG, 1/8" NPT (0 to 4.1 bar) ..... K4515N18060
160 PSIG, 1/8" NPT (0 to 11.0 bar) ..... K4515N18160
60 PSIG, 1/4" NPT (0 to 4.1 bar) ..... K4520N14060
160 PSIG, 1/4" NPT (0 to 11.0 bar) ..... K4520N14160
**Mounting Bracket Kit*** (Includes Panel Mount Nut)..... PS417B
**Panel Mount Nuts* –** Plastic..... P78652
Metal ..... P01531
**Service Kits –** Non-Relieving ..... PS422
Relieving ..... PS423
**Springs –** 1-15 PSIG Range (Yellow) ..... P01176
1-30 PSIG Range (Black) ..... P01175
1-60 PSIG Range (White) ..... P01174
2-125 PSIG Range (Gold) ..... P01173

*Tighten panel mount nut 2.8 to 3.4 Nm (25 to 30 in-lbs) of torque.

## Specifications

**Gauge Ports (2)** ..... 1/4 Inch
(Can be used for Full Flow)
**Port Threads** ..... 1/4, 3/8 Inch
**Pressure Ratings**.....0 to 250 PSIG (0 to 17.2 bar)
**Secondary Pressure Ranges –**
Standard Pressure..... 2 to 125 PSIG (0 to 8.6 bar)
Medium Pressure ..... 1 to 60 PSIG (0 to 4.1 bar)
Medium Pressure ..... 1 to 30 PSIG (0 to 2.1 bar)
Low Pressure..... 1 to 15 PSIG (0 to 1 bar)
**Temperature Ratings**.....32°F to 125°F (0°C to 52°C)
Low Temperature ..... -4°F to 125°F (-20°C to 52°C)
**Weight** .....0.5 lb. (0.23 kg)

## Materials of Construction

**Adjusting Nut**.....Brass
**Adjusting Stem & Spring** .....Steel
**Body** ..... Zinc
**Bonnet, Seat, Piston & Valve Poppet** ..... Plastic
**Seals** .....Nitrile



**Parker Hannifin Corporation**
Pneumatic Division
Richland, Michigan
www.wattsfluidair.com

# R10 Regulators – Compact

## Features

- Secondary aspiration plus balanced poppet provides quick response and accurate pressure regulation
- Rolling diaphragm for extended life
- Two high flow 1/4" gauge ports can be used as additional outlets
- Easily serviced
- Removable non-rising knob for panel mounting and tamper resistance
- High flow: 1/4" – 53 SCFM§
  3/8" – 60 SCFM§
  1/2" – 75 SCFM§

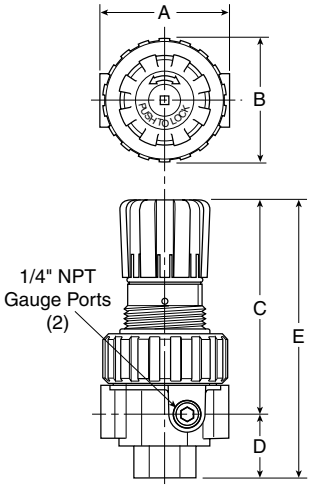


| Port Size | NPT |
|---|---|
| Without Gauge | |
| 1/4" | **R10-0211A*** |
| 3/8" | **R10-0311A*** |
| 1/2" | **R10-0411A*** |
| With 160 PSI Gauge | |
| 1/4" | **R10-0218A*** |
| 3/8" | **R10-0318A*** |
| 1/2" | **R10-0418A*** |

**Standard part numbers shown bold.**
**For other models refer to ordering information below.**
NOTE: 2.00 Dia. (51mm) hole required for panel mounting.
§ SCFM = Standard cubic feet per minute at 100 psig inlet, 90 psig no flow secondary setting and 10 psig pressure drop.

| R10 Regulator Dimensions | | | | |
|---|---|---|---|---|
| **A** | **B** | **C** | **D** | **E** |
| 2.81 (71) | 2.74 (70) | 4.69 (119) | 1.39 (35) | 6.08 (154) |

inches (mm)

## Ordering Information

| R10 | — | 02 | 11 | A | | |
|---|---|---|---|---|---|---|

**Port Threads**
- **– NPT**
- G BSPP

* 1/4 & 3/8 inch meet ISO 1179-1 Standard.

**Port Size**
- **02 1/4 Inch**
- **03 3/8 Inch**
- **04 1/2 Inch**

**Pressure Range**
- Without Gauge
- **11 0-60 PSIG**
- **13 0-125 PSIG**
- 15 0-250 PSIG
- With Gauge
- **16 0-60 PSIG**
- **18 0-125 PSIG**
- 21 0-250 PSIG

**Relief**
- **A Relieving**
- L Non-Relieving

**Engineering Level**
- * Will be Entered at Factory

**Options**
- **Blank No Options**
- L† Preset Non-Adjustable
- P† Preset Adjustable
- R Reverse Flow

† Inlet Pressure is 100 PSIG. For other pressures, contact factory.

**BOLD ITEMS ARE MOST POPULAR.**



**Parker Hannifin Corporation**
Pneumatic Division
Richland, Michigan
www.wattsfluidair.com

## Technical Information

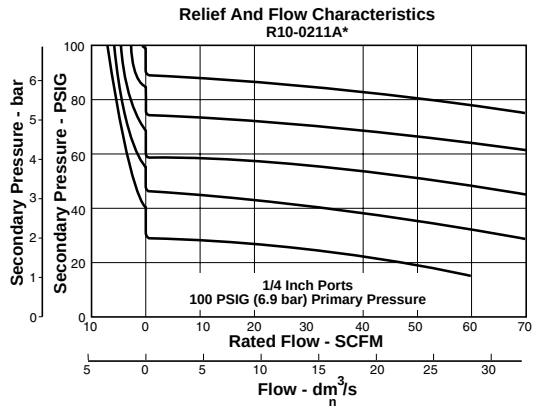


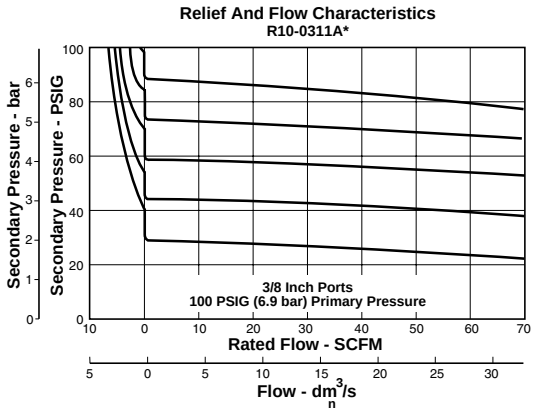


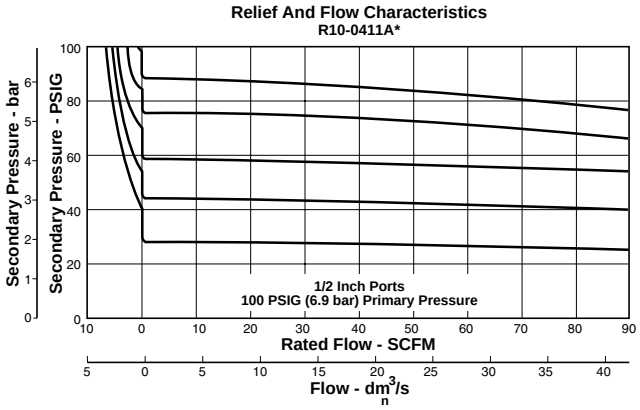


### ⚠ WARNING

**Product rupture can cause serious injury.**
**Do not connect regulator to bottled gas.**
**Do not exceed maximum primary pressure rating.**

### ⚠ CAUTION:

**REGULATOR PRESSURE ADJUSTMENT –** The working range of knob adjustment is designed to permit outlet pressures within their full range. Pressure adjustment beyond this range is also possible because the knob is not a limiting device. This is a common characteristic of most industrial regulators, and limiting devices may be obtained only by special design.
For best performance, regulated pressure should always be set by increasing the pressure up to the desired setting.

## R10 Regulator Kits & Accessories

**Bonnet Assembly Kit** ..... PS715

**Control Knob** ..... P04069B

**Gauges – 2" Dial Face**
60 psig (0 to 4.1 bar)..... K4520N14060
160 psig (0 to 11.0 bar)..... K4520N14160
300 psig (0 to 20.0 bar)..... K4520N14300

**1-3/4" Digital Round Face**
160 psig (0 to 11.0 bar)..... K4517N14160D

**Mounting Bracket Kit** (Includes Panel Mount Nut)..... PS707

**Panel Mount Nut –** Plastic ..... P04082
Metal ..... P04079B

**Reverse Flow Service Conversion Kit –**
Relieving ..... PS708R

**Service Kit –** Relieving (Includes Poppet)..... PS708
Non-Relieving (Includes Poppet)..... PS709

**Springs –** 1-30 psig Range..... P01698
1-60 psig Range..... P04062
2-125 psig Range..... P04063
5-250 psig Range..... P04064

**Tamperproof Kit**..... PS737

## Specifications

**Gauge Ports (2)** ..... 1/4 Inch
(Can be used as additional High Flow 1/4 Inch Outlet Ports)

**Port Threads** ..... 1/4, 3/8, 1/2 Inch **Primary Pressure Rating –**
Maximum Primary Pressure ..... 250 psig (17.2 bar)

**Secondary Pressure Ranges –**
Standard Pressure..... 2 to 125 psig (0 to 8.6 bar)
Low Pressure..... 1 to 60 psig (0 to 4.1 bar)
High Pressure..... 5 to 250 psig (0.4 to 17.2 bar)

**Temperature Rating** .....32°F to 175°F (0°C to 80°C)
Low Temperature ..... -4°F to 125°F (-20°C to 52°C)

**Weight** .....1.6 lb. (0.7 kg)

## Materials of Construction

**Adjusting Stem** ..... Steel

**Body** ..... Zinc

**Bonnet, Piston Stem, Valve Poppet & Cap** .....Plastic

**Collar, Knob**.....Plastic

**Diaphragm** ..... Nitrile

**Seals** ..... Nitrile

**Springs –** Poppet.....Stainless
Control..... Steel



**Parker Hannifin Corporation**
Pneumatic Division
Richland, Michigan
www.wattsfluidair.com

# R10 Regulators – Standard

## Features

- Secondary aspiration plus balanced poppet provides quick response and accurate pressure regulation
- Rolling diaphragm for extended life
- Two high flow 1/4" gauge ports can be used as additional outlets
- Easily serviced
- Removable non-rising knob for panel mounting and tamper resistance
- High flow: 3/4" – 90 SCFM§

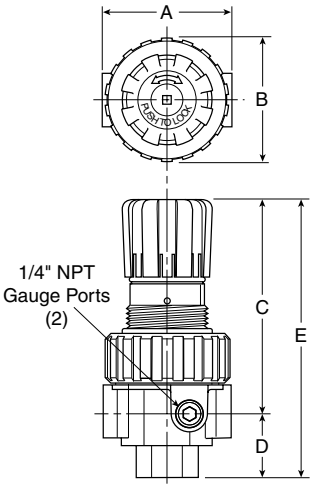


| Port Size | NPT |
|---|---|
| Without Gauge | |
| 3/4" | **R10-0611A*** |
| With 160 PSI Gauge | |
| 3/4" | **R10-0618A*** |

**Standard part numbers shown bold.**
**For other models refer to ordering information below.**
NOTE: 2.00 Dia. (51mm) hole required for panel mounting.
§ SCFM = Standard cubic feet per minute at 100 psig inlet, 90 psig no flow secondary setting and 10 psig pressure drop.

| R10 Regulator Dimensions | | | | |
|---|---|---|---|---|
| **A** | **B** | **C** | **D** | **E** |
| 3.24 (82) | 2.74 (70) | 4.79 (122) | 1.61 (41) | 6.40 (163) |

inches (mm)

## Ordering Information

| R10 | — | 06 | 11 | A | | |
|---|---|---|---|---|---|---|

**Port Threads**
- **– NPT**
- G BSPP

**Port Size**
- **06 3/4 Inch**

**Pressure Range**
- Without Gauge
- **11 0-60 PSIG**
- **13 0-125 PSIG**
- 15 0-250 PSIG
- With Gauge
- **16 0-60 PSIG**
- **18 0-125 PSIG**
- 21 0-250 PSIG

**Relief**
- **A Relieving**
- L Non-Relieving

**Engineering Level**
- * Will be Entered at Factory

**Options**
- **Blank No Options**
- L† Preset Non-Adjustable
- P† Preset Adjustable
- R Reverse Flow

† Inlet Pressure is 100 PSIG. For other pressures, contact factory.

**BOLD ITEMS ARE MOST POPULAR.**



**Parker Hannifin Corporation**
Pneumatic Division
Richland, Michigan
www.wattsfluidair.com

## Technical Information

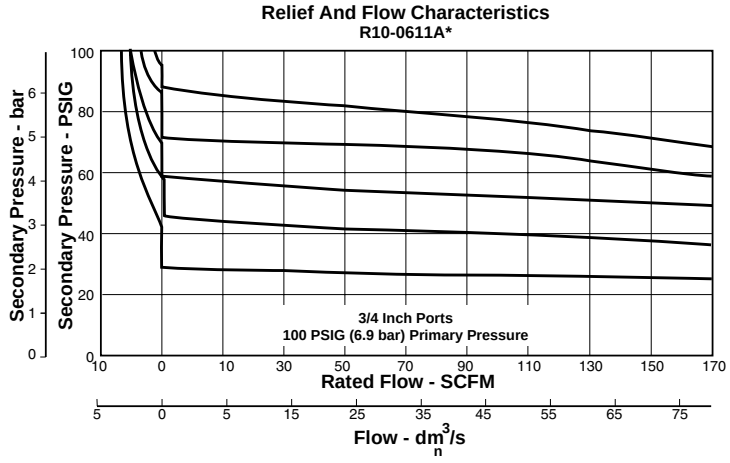


**⚠ WARNING**

**Product rupture can cause serious injury.**
**Do not connect regulator to bottled gas.**
**Do not exceed maximum primary pressure rating.**

**⚠ CAUTION:**

**REGULATOR PRESSURE ADJUSTMENT –** The working range of knob adjustment is designed to permit outlet pressures within their full range. Pressure adjustment beyond this range is also possible because the knob is not a limiting device. This is a common characteristic of most industrial regulators, and limiting devices may be obtained only by special design.
For best performance, regulated pressure should always be set by increasing the pressure up to the desired setting.

## R10 Regulator Kits & Accessories

**Bonnet Assembly Kit** ..... PS715

**Control Knob** ..... P04069B

**Gauges – 2" Dial Face**
60 psig (0 to 4.1 bar)..... K4520N14060
160 psig (0 to 11.0 bar)..... K4520N14160
300 psig (0 to 20.0 bar)..... K4520N14300

**1-3/4" Digital Round Face**
160 psig (0 to 11.0 bar)..... K4517N14160D

**Mounting Bracket Kit (Includes Panel Mount Nut)**..... PS807

**Panel Mount Nut –** Plastic..... P04082
Metal ..... P04079B

**Reverse Flow Service Conversion Kit –**
Relieving..... PS808R

**Service Kit –** Relieving (Includes Poppet) ..... PS808
Non-Relieving (Includes Poppet) ..... PS809

**Springs –** 1-30 psig Range ..... P01698
1-60 psig Range ..... P04062
2-125 psig Range ..... P04063
5-250 psig Range ..... P04064

**Tamperproof Kit** ..... PS737

## Specifications

**Gauge Ports (2)** ..... 1/4 Inch
(Can be used as additional High Flow 1/4 Inch Outlet Ports)

**Port Threads** ..... 1/2, 3/4 Inch

**Primary Pressure Rating –**
Maximum Primary Pressure..... 250 psig (17.2 bar)

**Secondary Pressure Ranges –**
Standard Pressure ..... 2 to 125 psig (0 to 8.6 bar)
Low Pressure ..... 1 to 60 psig (0 to 4.1 bar)
High Pressure ..... 5 to 250 psig (0.4 to 17.2 bar)

**Temperature Rating** ..... 32°F to 175°F (0°C to 80°C)
Low Temperature ..... -4°F to 125°F (-20°C to 52°C)

**Weight** ..... 2.5 lb. (1.1 kg)

## Materials of Construction

**Adjusting Stem** ..... Steel

**Body**..... Zinc

**Bonnet, Piston Stem, Valve Poppet & Cap** ..... Plastic

**Collar, Knob**..... Plastic

**Diaphragm** ..... Nitrile

**Seals** ..... Nitrile

**Springs –** Poppet..... Stainless
Control..... Steel



**Parker Hannifin Corporation**
Pneumatic Division
Richland, Michigan
www.wattsfluidair.com

# R119 Regulators – Standard

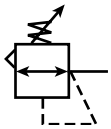

## Features

- High flow performance featuring rugged design for the most demanding applications
- Ideal for those installations calling for constant pressure with wide variation in flow
- Diaphragm operated design with balanced poppet design for quick and accurate regulation
- Secondary aspiration plus balanced poppet provides quick response and accurate pressure regulation
- Heavy duty tee handle adjustment
- Reverse flow version available
- Panel mount version available
- High flow: 1/4" – 100 SCFM§
  3/8" – 110 SCFM§
  1/2" – 150 SCFM§

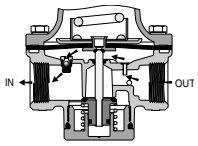


**X80 Reverse Flow Option**

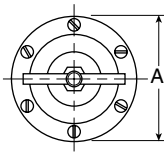


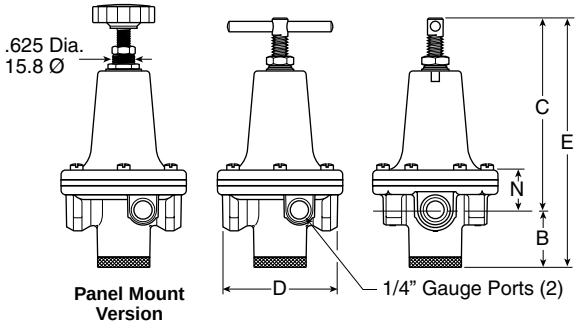


| Port Size | NPT Relieving | BSPP Relieving |
|---|---|---|
| Without Gauge 0-125 PSIG Reduced Pressure | | |
| 1/4" | **R119-02C** | **R119G02C** |
| 3/8" | **R119-03C** | **R119G03C** |
| 1/2" | **R119-04C** | **R119G04C** |
| With Gauge 0-125 PSIG Reduced Pressure | | |
| 1/4" | **R119-02CG** | — |
| 3/8" | **R119-03CG** | — |
| 1/2" | **R119-04CG** | — |

**Standard part numbers shown bold.**
**For other models refer to ordering information below.**

§ SCFM = Standard cubic feet per minute at 100 PSIG inlet, 75 PSIG no flow secondary setting, and 20 PSIG pressure drop.

| R119 Regulator Dimensions | | | | | |
|---|---|---|---|---|---|
| A | B | C | D | E | N |
| R119-02C, R119-03C | | | | | |
| 3.00 (76) | 1.38 (35) | 5.29 (134) | 2.74 (70.5) | 6.67 (169) | .90 (24) |
| R119-04C | | | | | |
| 3.56 (90) | 1.56 (40) | 5.34 (136) | 3.25 (83) | 6.90 (175) | 1.45 (37) |

inches (mm)

## Ordering Information

| R | 119 | — | 02 | C | | /** |
|---|---|---|---|---|---|---|

**Port Threads**
- **– NPT**
- G BSPP

**Port Size**
- **02 1/4 Inch**
- **03 3/8 Inch**
- **04 1/2 Inch**

**Reduced Pressure Range**
- A 0-25 PSIG
- B 0-60 PSIG
- **C 0-125 PSIG**
- D 0-250 PSIG

**Options**
- **– None**
- **G Gauge**
- K† Non-Relieving
- P Panel Mount
- X64** Fluorocarbon O-Rings and Diaphragm
- X80* Reverse Flow
- X7 Brass Bottom Plug

**Engineering Level**
- * Will be Entered at Factory

* Reverse flow for use downstream of control valves.
** Brass Bottom Plug Standard with X64 Option.
† Not available with 250 PSIG spring

**BOLD ITEMS ARE MOST POPULAR.**



**Parker Hannifin Corporation**
Pneumatic Division
Richland, Michigan
www.wattsfluidair.com

## Technical Information

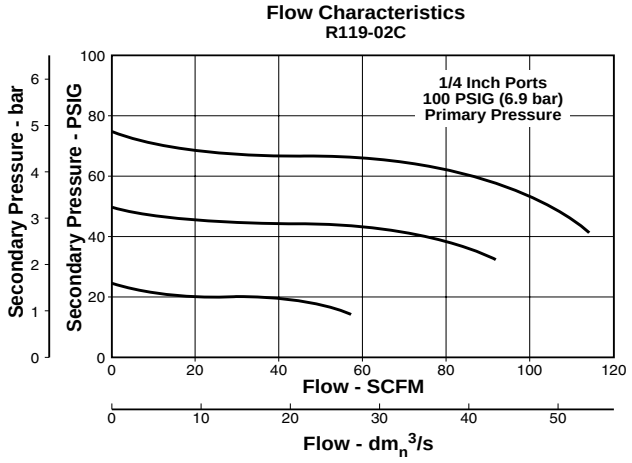


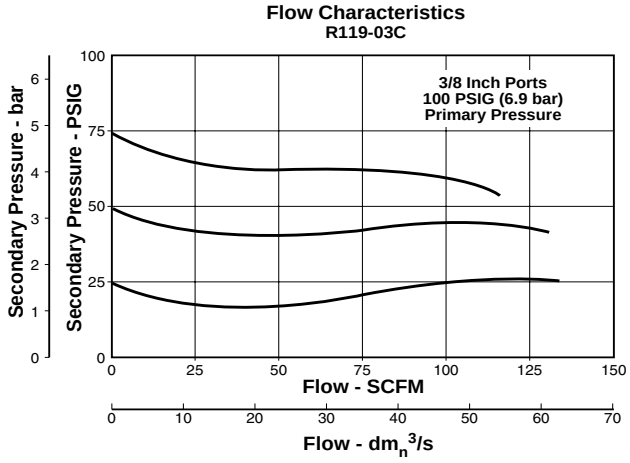


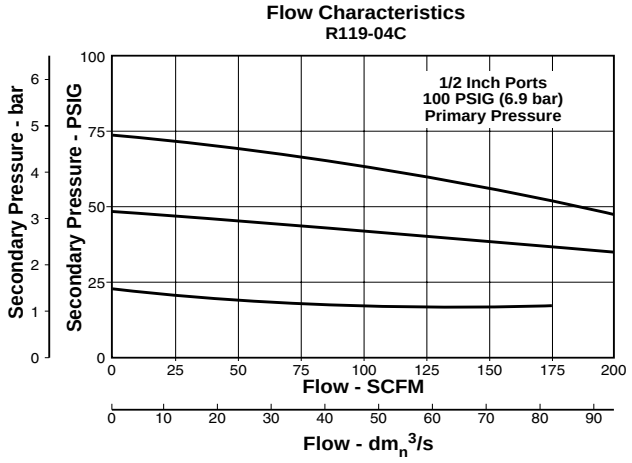


**⚠ WARNING**

**Product rupture can cause serious injury.**
**Do not connect regulator to bottled gas.**
**Do not exceed maximum primary pressure rating.**

**⚠ CAUTION:**

**REGULATOR PRESSURE ADJUSTMENT –** The working range of knob adjustment is designed to permit outlet pressures within their full range. Pressure adjustment beyond this range is also possible because the knob is not a limiting device. This is a common characteristic of most industrial regulators, and limiting devices may be obtained only by special design.
For best performance, regulated pressure should always be set by increasing the pressure up to the desired setting.

## R119 Regulator Kits & Accessories

**Gauges –**

**2" Dial Face**
60 psig (0 to 4.1 bar) ..... K4520N14060
160 psig (0 to 11.0 bar) ..... K4520N14160
300 psig (0 to 20.0 bar) ..... K4520N14300

**1-3/4" Digital Round Face**
160 psig (0 to 11.0 bar) ..... K4517N14160D

**Mounting Bracket Kit –**
1/4", 3/8" ..... SA15Y57
1/2" ..... 18A57

**Panel Mount Conversion Kit –**
1/4", 3/8" ..... 4202
1/2" ..... 4204

**Repair Kits –**
Non-Relieving Diaphragm,
Valve Assembly (1/4", 3/8"; All PSIG) ..... RK118Y

Relieving Diaphragm,
Valve Assembly (1/4", 3/8"; All PSIG) ..... RK119Y

Non-Relieving Diaphragm,
Valve Assembly (1/2"; 25, 60, 125 PSIG) ..... RK118A

Non-Relieving Diaphragm,
Valve Assembly (1/2"; 250 PSIG) ..... RK118A250

Relieving Diaphragm,
Valve Assembly (1/2"; 25, 60, 125 PSIG) ..... RK119A

Relieving Diaphragm,
Valve Assembly (1/2"; 250 PSIG) ..... RK119A250

Spring Cage & T-Handle Kit (1/4 & 3/8) ..... RKC119Y

Spring Cage & Insert Only Kit (1/2) ..... SAC18A3/BK

For Fluorocarbon Repair Kits, add X64 to Kit Number suffix.

## Specifications

**Gauge Ports (2)** ..... 1/4 Inch
**Port Threads** ..... 1/4, 3/8, 1/2 Inch
**Reduced Pressure Range** ..... 2 to 125 PSIG (0.15 to 8.5 bar)
**Supply Pressure** ..... 300 PSIG Maximum (20.4 bar)
**Temperature Rating** ..... 40°F to 125°F (4.4°C to 52°C)
**Weight –**
R119-02, R119-03 ..... 1.8 lb. (0.82 kg) / Unit
26 lb. (11.79 kg) / 12-Unit Master Pack
R119-04 ..... 3.2 lb. (1.45 kg) / Unit
27 lb. (12.25 kg) / 8-Unit Master Pack

## Materials of Construction

**Adjusting Screw, Springs** ..... Steel
**Body, Spring Cage** ..... Zinc
**Bottom Plug** ..... Nylon
**Innervalve** ..... Brass
**Seals** ..... Buna N



**Parker Hannifin Corporation**
Pneumatic Division
Richland, Michigan
www.wattsfluidair.com

# R119 Regulators – Hi-Flow

## Features

- High flow performance featuring rugged design for the most demanding applications
- Ideal for those installations calling for constant pressure with wide variation in flow
- Diaphragm operated design with balanced poppet design for quick and accurate regulation
- Secondary aspiration plus balanced poppet provides quick response and accurate pressure regulation
- Heavy duty tee handle adjustment
- Reverse flow version available
- High flow: 3/4" 300 SCFM
  1" 400 SCFM
  1-1/4" & 1-1/2" 500 SCFM

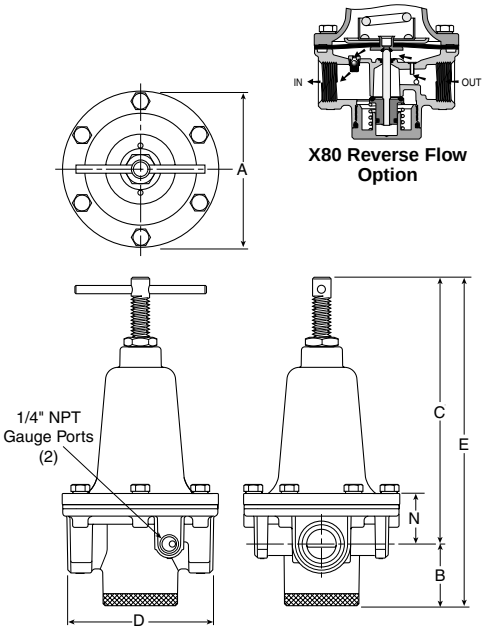


| Port Size | NPT Relieving |
|---|---|
| Without Gauge 0-125 PSIG Reduced Pressure | |
| 3/4" | **R119-06C** |
| 1" | **R119-08C** |
| 1-1/4" | **R119-10C** |
| 1-1/2" | **R119-12C** |
| With Gauge 0-125 PSIG Reduced Pressure | |
| 3/4" | **R119-06CG** |
| 1" | **R119-08CG** |
| 1-1/4" | **R119-10CG** |
| 1-1/2" | **R119-12CG** |

**Standard part numbers shown bold.**
**For other models refer to ordering information below.**

§ SCFM = Standard cubic feet per minute at 100 PSIG inlet, 75 PSIG no flow secondary setting, and 20 PSIG pressure drop.

| R119 Regulator Dimensions | | | | | |
|---|---|---|---|---|---|
| A | B | C | D | E | N |
| **R119-06C, R119-08C** | | | | | |
| 4.69 (119) | 1.87 (47) | 8.15 (207) | 4.38 (111) | 10.02 (255) | 1.61 (41) |
| **R119-10C, R119-12C** | | | | | |
| 4.94 (125) | 1.81 (46) | 8.53 (217) | 4.94 (125) | 10.34 (263) | 1.99 (50.6) |

inches (mm)

**⚠ WARNING**

**Product rupture can cause serious injury.**
**Do not connect regulator to bottled gas.**
**Do not exceed maximum primary pressure rating.**

## Ordering Information

| R | 119 | — | 06 | C | G | /** |
|---|---|---|---|---|---|---|

**Port Threads**
- **– NPT**
- G BSPP

**Port Size**
- **06 3/4 Inch**
- **08 1 Inch**
- **10 1-1/4 Inch**
- **12 1-1/2 Inch**

**Reduced Pressure Range**
- **C 0-125 PSIG**
- D 0-250 PSIG

**Options**
- **– None**
- **G Gauge**
- K Non-Relieving
- X64** Fluorocarbon O-Rings and Diaphragm
- X80* Reverse Flow
- X7 Brass Bottom Plug

* Reverse flow for use downstream of control valves.
** Brass Bottom Plug Standard with X64 Option.

**Engineering Level**
- * Will be Entered at Factory

**BOLD ITEMS ARE MOST POPULAR.**



**Parker Hannifin Corporation**
Pneumatic Division
Richland, Michigan
www.wattsfluidair.com

## Technical Information

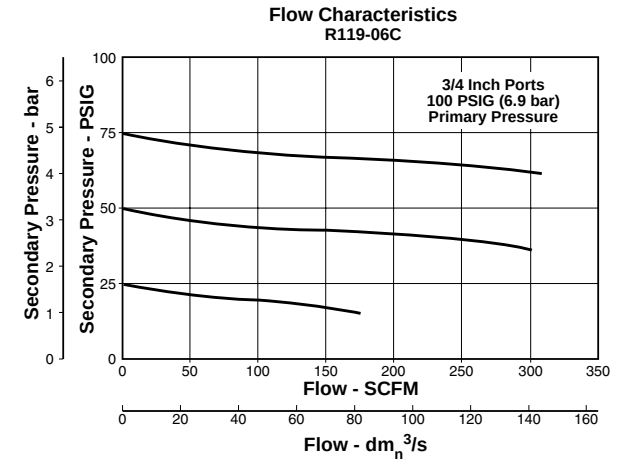


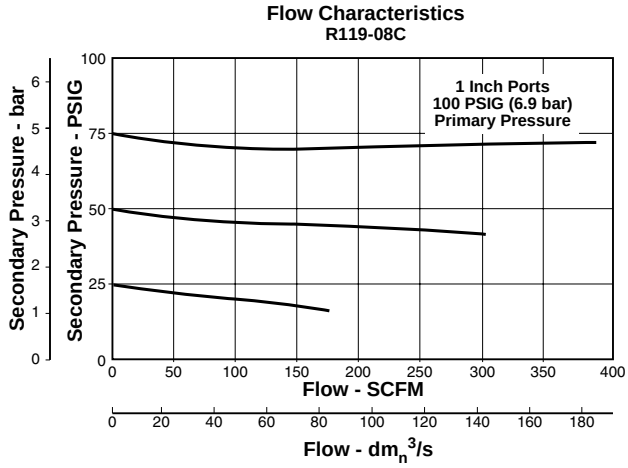


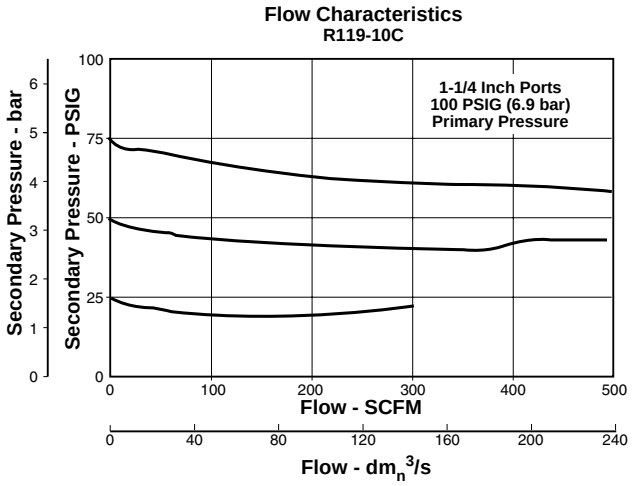


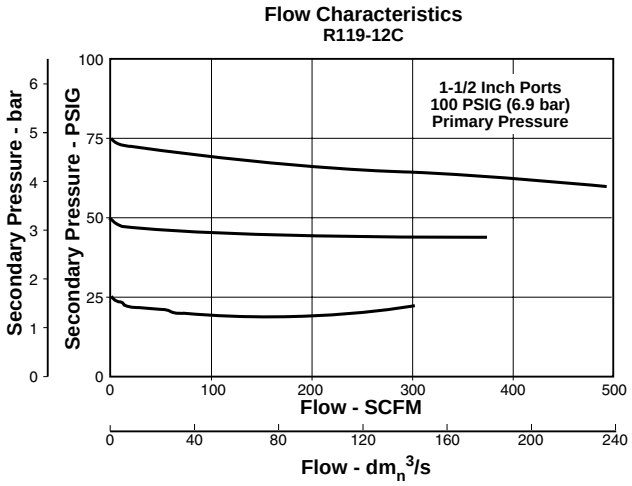


## R119 Regulator Kits & Accessories

**Gauges –**

**2" Dial Face**

60 psig (0 to 4.1 bar) ..... K4520N14060
160 psig (0 to 11.0 bar) ..... K4520N14160
300 psig (0 to 20.0 bar) ..... K4520N14300

**1-3/4" Digital Round Face**

160 psig (0 to 11.0 bar) ..... K4517N14160D

**Mounting Bracket Kit** ..... 18B57

**Repair Kits –**

Non-Relieving Diaphragm,
Valve Assembly (3/4", 1") ..... RK118B

Non-Relieving Diaphragm,
Valve Assembly (1-1/4", 1-1/2") ..... RK118D

Relieving Diaphragm,
Valve Assembly (3/4", 1") ..... RK119B

Relieving Diaphragm,
Valve Assembly (1-1/4", 1-1/2") ..... RK119D

For Fluorocarbon Repair Kits, add X64 to Kit Number suffix.

## Specifications

**Gauge Ports (2)** ..... 1/4 Inch

**Port Threads** ..... 3/4, 1, 1-1/4, 1-1/2 Inch

**Reduced Pressure Range** ..... 2 to 125 PSIG (0.15 to 8.5 bar)

**Supply Pressure** ..... 300 PSIG Maximum (20.4 bar)

**Temperature Rating** ..... 40°F to 125°F (4.4°C to 52°C)

**Weight –**

R119-06, R119-08 ..... 6.2 lb. (2.81 kg) / Unit
25 lb. (11.34 kg) / 4-Unit Master Pack

R119-10, R119-12 ..... 7.2 lb. (3.27 kg) / Unit
29 lb. (13.15 kg) / 4-Unit Master Pack

## Materials of Construction

**Adjusting Screw, Springs** ..... Steel

**Body, Spring Cage** ..... Zinc

**Bottom Plug, Innervalve** ..... Brass

**Seals** ..... Buna N



**Parker Hannifin Corporation**
Pneumatic Division
Richland, Michigan
www.wattsfluidair.com

# 09R Regulators – Hi-Flow

## Features

- Piston design for reduced downtime
- High flow
- Balanced poppet for quick and accurate regulation
- Two full flow 1/4" gauge ports which can be used as additional outlets
- Self relieving piston standard
- High flow: 2" – 1000 SCFM§

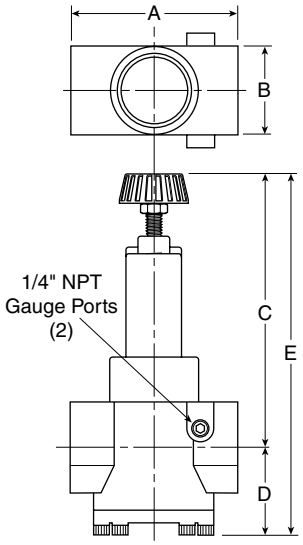


| Port Size | NPT |
|---|---|
| Without Gauge | |
| 2" | **09R813B*** |

**Standard part numbers shown bold.**
**For other models refer to ordering information below.**

§ SCFM = Standard cubic feet per minute at 100 PSIG inlet, 90 PSIG no flow secondary setting and 10 PSIG pressure drop.

| 09R Regulator Dimensions | | | | |
|---|---|---|---|---|
| **A** | **B** | **C** | **D** | **E** |
| 5.30 (135) | 3.60 (91) | 9.10 (231) | 2.80 (71) | 11.90 (302) |

Inches (mm)

## Ordering Information

| 09R | 8 | 13 | B | * |
|---|---|---|---|---|

| Port Size |
|---|
| **8 2 Inch** |

| Pressure Range |
|---|
| **13 125 PSIG** |

| Relief |
|---|
| **B Relieving** |
| M Non-Relieving |

| Engineering Level |
|---|
| * Will be Entered at Factory |

**BOLD ITEMS ARE MOST POPULAR.**



**Parker Hannifin Corporation**
Pneumatic Division
Richland, Michigan
www.wattsfluidair.com

## Technical Information

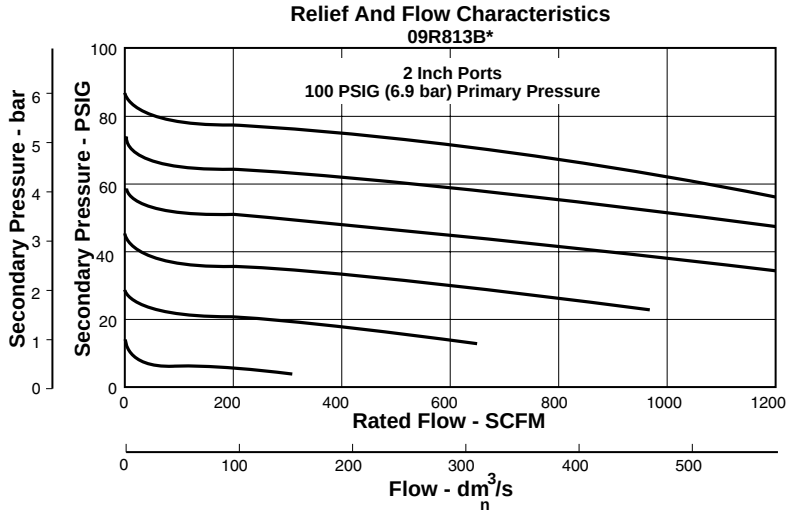


**⚠ WARNING**

**Product rupture can cause serious injury.**
**Do not connect regulator to bottled gas.**
**Do not exceed maximum primary pressure rating.**

**⚠ CAUTION:**

**REGULATOR PRESSURE ADJUSTMENT –** The working range of knob adjustment is designed to permit outlet pressures within their full range. Pressure adjustment beyond this range is also possible because the knob is not a limiting device. This is a common characteristic of most industrial regulators, and limiting devices may be obtained only by special design.
For best performance, regulated pressure should always be set by increasing the pressure up to the desired setting.

## 09R Regulator Kits & Accessories

**Body Service Kit** ..... PS603

**Gauges –**
**2" Dial Face**
160 psig (0 to 11.0 bar) ..... K4520N14160
300 psig (0 to 20.0 bar) ..... K4520N14300

**1-3/4" Digital Round Face**
160 psig (0 to 11.0 bar) ..... K4517N14160D

**Mounting Bracket Kit** ..... PS605

**Service Kit –**
Non-Relieving ..... PS604
Relieving ..... PS626

**Springs –**
2-125 PSIG Range ..... PS602

## Specifications

**Gauge Ports (2)** ..... 1/4 Inch
(Can be used as additional Full Flow 1/4 Inch Outlet Ports)

**Port Threads** ..... 2 Inch

**Primary Pressure Rating –**
Maximum Primary Pressure ..... 250 PSIG (17.2 bar)

**Secondary Pressure Range –** ..... 10 to 125 PSIG (0.7 to 8.6 bar)

**Temperature Rating** ..... 32°F to 150°F (0°C to 66°C)

**Weight** ..... 10.82 lb. (53 kg)

## Materials of Construction

**Adjusting Stem & Springs** ..... Steel

**Body** ..... Zinc Alloy, Die Cast

**Bonnet, Piston Stem, Valve Poppet & Cap** ..... Aluminum

**Piston, Cap** ..... Plastic

**Seals** ..... Nitrile



**Parker Hannifin Corporation**
Pneumatic Division
Richland, Michigan
www.wattsfluidair.com

# R119 – Pilot Operated Regulators

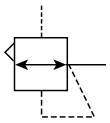

## Features

- Adapted for control by a remote or distant small pilot regulator. Ideal for maximum capacity requirements in applications where units are not readily accessible
- High flow performance featuring rugged design for the most demanding applications
- Ideal for those installations calling for constant pressure with wide variation in flow
- Diaphragm operated design with balanced poppet and constant bleed pilot for quick and accurate regulation.
- Secondary aspiration plus balanced poppet provides quick response and accurate pressure regulation
- Reverse flow available
- High flow: 1/4" - 100 SCFM§
  3/8" - 110 SCFM§
  1/2" - 150 SCFM§

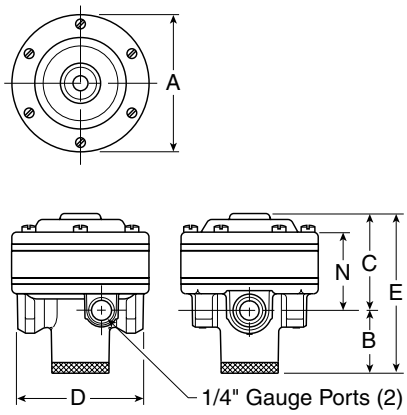


| R119 Regulator Dimensions | | | | | |
|---|---|---|---|---|---|
| A | B | C | D | E | N |
| **R119-02J, R119-03J** | | | | | |
| 3.00 (76) | 1.38 (35) | 1.98 (50) | 2.74 (70) | 3.55 (90) | 1.57 (40) |
| **R119-04J** | | | | | |
| 3.56 (90) | 1.56 (40) | 2.33 (59) | 3.25 (83) | 3.90 (99) | 1.91 (49) |

inches
(mm)

| Port Size | NPT Relieving | BSPP Relieving |
|---|---|---|
| Without Gauge 0-125 PSIG Reduced Pressure | | |
| 1/4" | **R119-02J** | R119G02J |
| 3/8" | **R119-03J** | R119G03J |
| 1/2" | **R119-04J** | R119G04J |

**Standard part numbers shown bold.**
**For other models refer to ordering information below.**

§ SCFM = Standard Cubic Feet Per Minute at 100 PSIG Inlet, 75 PSIG No Flow Secondary Setting, and 20 PSIG Pressure Drop.

**⚠ WARNING**

**Product rupture can cause serious injury.**
**Do not connect regulator to bottled gas.**
**Do not exceed maximum primary pressure rating.**

## Ordering Information

| R | 119 | — | 02 | J | | /** |
|---|---|---|---|---|---|---|

**Port Threads**
- **– NPT**
- G BSPP

**Port Size**
- **02 1/4 Inch**
- **03 3/8 Inch**
- **04 1/2 Inch**

**Reduced Pressure Range**
- **J Air Pilot Operated**

**Options**
- K Non-Relieving
- X64* Fluorocarbon O-Rings and Diaphragm
- X71 Non-Bleed Pilot (For use with Electronic Controllers)
- X7 Brass Bottom Plug

* Brass Bottom Plug Standard with X64 Option.

**Engineering Level**
- * Will be Entered at Factory

**BOLD ITEMS ARE MOST POPULAR.**



**Parker Hannifin Corporation**
Pneumatic Division
Richland, Michigan
www.wattsfluidair.com

## Technical Information

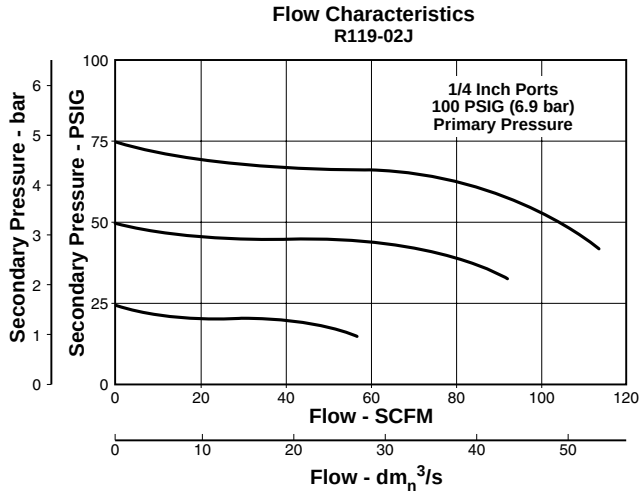


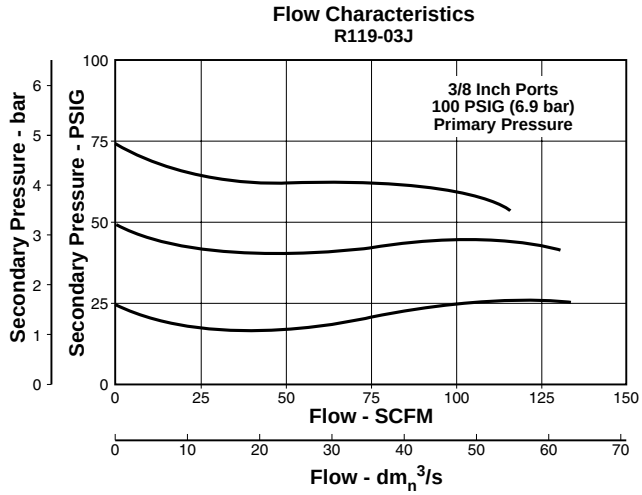


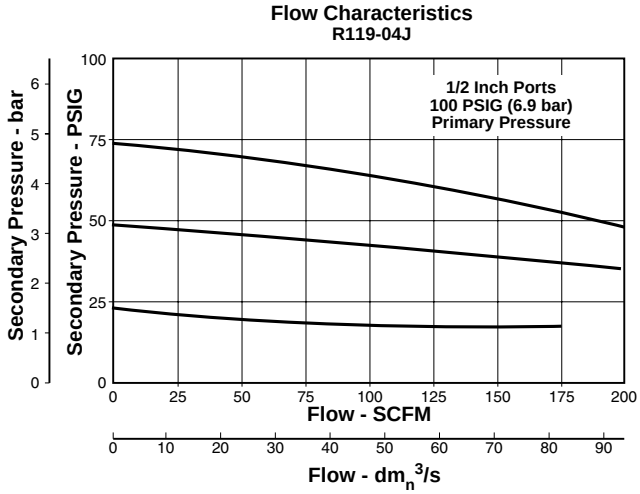


## R119 Regulator Kits & Accessories

**Gauges –**

**2" Dial Face**

60 psig (0 to 4.1 bar) ..... K4520N14060
160 psig (0 to 11.0 bar) ..... K4520N14160
300 psig (0 to 20.0 bar) ..... K4520N14300

**1-3/4" Digital Round Face**

160 psig (0 to 11.0 bar) ..... K4517N14160D

**Repair Kits –**

Non-Relieving Diaphragm, Valve Assembly (1/2") ..... RK118X20A

Non-Relieving Diaphragm, Valve Assembly (1/4", 3/8") ..... RK118X20Y

Relieving Diaphragm, Valve Assembly (1/2") ..... RK119X20A

Relieving Diaphragm, Valve Assembly (1/4", 3/8") ..... RK119X20Y

For Fluorocarbon Repair Kits, add X64 to Kit Number suffix.

For Non-Bleed Pilot Repair Kits, add X71 to Kit Number suffix.

## Specifications

**Gauge Ports (2)** ..... 1/4 Inch

**Port Threads** ..... 1/4, 3/8, 1/2 Inch

**Pilot Port –**

1/4 & 3/8" Threads ..... 1/8"
1/2" Threads ..... 1/4"

**Reduced Pressure Range –**

Adjustable to within 5 to 7 PSIG of Supply Pressure

**Supply Pressure** ..... 300 PSIG Maximum (20.4 bar)

**Air Consumption –**

Constant bleed from air pilot chamber: approx. 0.17 SCFM (10 SCFH)

**Temperature Rating** ..... 40°F to 125°F (4.4°C to 52°C)

**Weight –**

R119-02J, R119-03J ..... 1.6 lb. (0.73 kg) / Unit
19 lb. (8.62 kg) / 12-Unit Master Pack

R119-04J ..... 2.6 lb. (1.18 kg) / Unit
21 lb. (9.53 kg) / 8-Unit Master Pack

## Materials of Construction

**Body, Ring, Top Plate** ..... Zinc

**Bottom Plug** ..... Nylon

**Innervalve** ..... Brass

**Seals** ..... Buna N



**Parker Hannifin Corporation**
Pneumatic Division
Richland, Michigan
www.wattsfluidair.com

# R119 – Pilot Operated Regulators

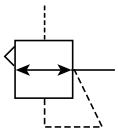

## Features

- Adapted for control by a remote or distant small pilot regulator. Ideal for maximum capacity requirements in applications where units are not readily accessible
- High flow performance featuring rugged design for the most demanding applications
- Ideal for those installations calling for constant pressure with wide variation in flow
- Diaphragm operated design with balanced poppet and constant bleed pilot for quick and accurate regulation
- Secondary aspiration plus balanced poppet provides quick response and accurate pressure rgulation
- Reverse flow version available
- High flow: 3/4" & 1" – 300 SCFM§
  1-1/4" & 1-1/2" – 500 SCFM§

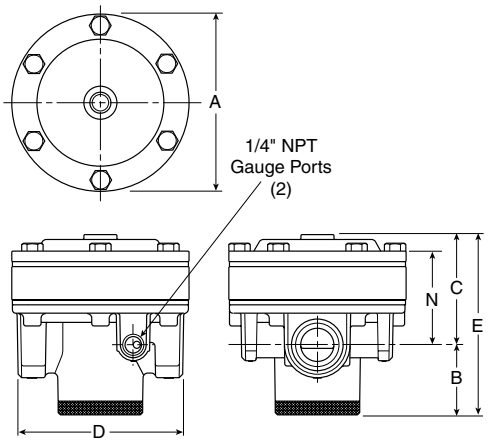


| R119-06J, R119-08J Pilot Regulator Dimensions | | | | | |
|---|---|---|---|---|---|
| A | B | C | D | E | N |
| 4.72 (120) | 1.87 (47) | 2.94 (75) | 4.38 (111) | 4.81 (122) | 2.47 (63) |
| **R119-10J, R119-12J Pilot Regulator Dimensions** | | | | | |
| A | B | C | D | E | N |
| 4.94 (125) | 1.81 (46) | 3.32 (84) | 4.94 (125) | 5.13 (130) | 2.88 (736) |

inches (mm)

| Port Size | NPT Relieving |
|---|---|
| Without Gauge 0-125 PSIG Reduced Pressure | |
| 3/4" | **R119-06J** |
| 1" | **R119-08J** |
| 1-1/4" | **R119-10J** |
| 1-1/2" | **R119-12J** |

**Standard part numbers shown bold.**
**For other models refer to ordering information below.**

§ SCFM = Standard Cubic Feet Per Minute at 100 PSIG Inlet, 75 PSIG No Flow Secondary Setting, and 20 PSIG Pressure Drop.

**⚠ WARNING**

**Product rupture can cause serious injury.**
**Do not connect regulator to bottled gas.**
**Do not exceed maximum primary pressure rating.**

## Ordering Information

| R | 119 | — | 06 | J | | /** |
|---|---|---|---|---|---|---|

**Port Threads**
- **–** NPT
- G BSPP

**Port Size**
- **06 3/4 Inch**
- **08 1 Inch**
- **10 1-1/4 Inch**
- **12 1-1/2 Inch**

**Reduced Pressure Range**
- **J Air Pilot Operated**

**Options**
- K Non-Relieving
- X64* Fluorocarbon O-Rings and Diaphragm
- X71 Non-Bleed Pilot (For use with Electronic Controllers)

* Brass Bottom Plug Standard with X64 Option.

**Engineering Level**
- * Will be Entered at Factory

**BOLD ITEMS ARE MOST POPULAR.**



**Parker Hannifin Corporation**
Pneumatic Division
Richland, Michigan
www.wattsfluidair.com

## Technical Information

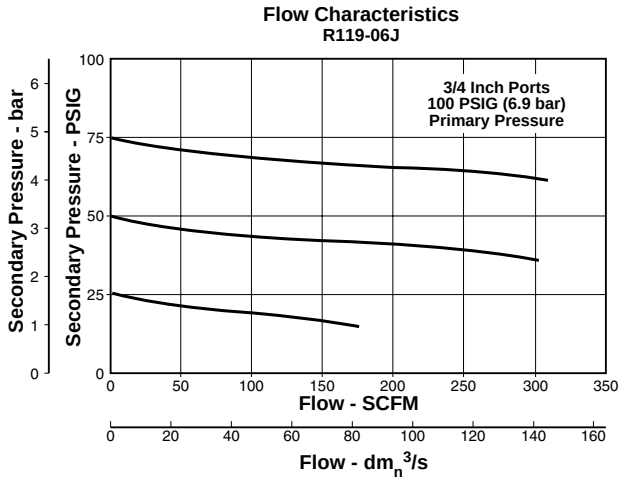


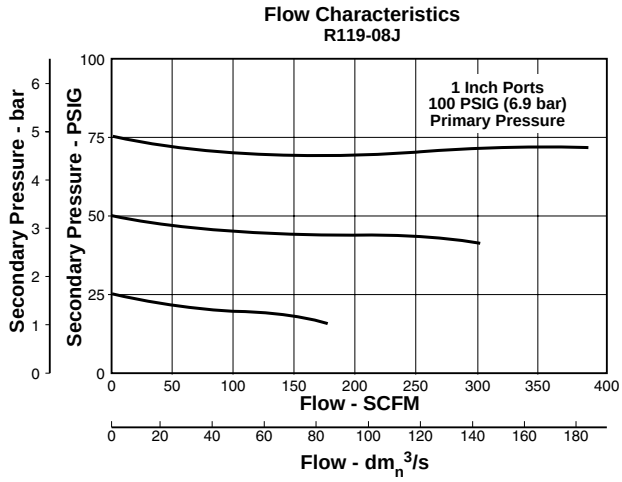


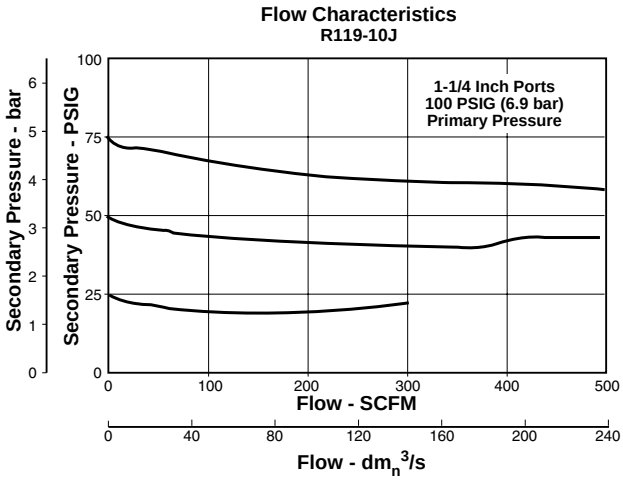


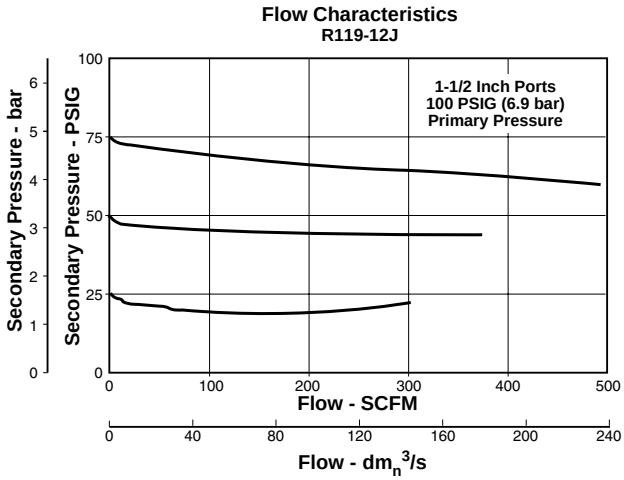


## R119 Regulator Kits & Accessories

**Gauges –**

**2" Dial Face**

60 psig (0 to 4.1 bar) ..... K4520N14060
160 psig (0 to 11.0 bar) ..... K4520N14160
300 psig (0 to 20.0 bar) ..... K4520N14300

**1-3/4" Digital Round Face**

160 psig (0 to 11.0 bar) ..... K4517N14160D

**Repair Kits –**

Non-Relieving Diaphragm,
Valve Assembly (3/4", 1") ..... RK118X20B

Non-Relieving Diaphragm,
Valve Assembly (1-1/4", 1-1/2") ..... RK118X20D

Relieving Diaphragm,
Valve Assembly (3/4", 1") ..... RK119X20B

Relieving Diaphragm,
Valve Assembly (1-1/4", 1-1/2") ..... RK119X20D

For Fluorocarbon Repair Kits, add X64 to Kit Number suffix.

For Non-Bleed Pilot Repair Kits, add X71 to Kit Number suffix.

## Specifications

**Gauge Ports (2)** ..... 1/4 Inch

**Port Threads** ..... 3/4, 1, 1-1/4, 1-1/2 Inch

**Reduced Pressure Range –**
Adjustable to Within 5 to 7 PSIG of Supply Pressure

**Supply Pressure** ..... 300 PSIG Maximum (20.4 bar)

**Air Consumption –**
Constant Bleed from Air Pilot Chamber:
Approximately 0.17 SCFM (10 SCFH)

**Temperature Rating** ..... 40°F to 125°F (4.4°C to 52°C)

**Weight –**

R119-06J, R119-08J ..... 5.2 lb. (2.36 kg) / Unit
42 lb. (19.05 kg) / 8-Unit Master Pack

R119-10J, R119-12J ..... 5.6 lb. (2.54 kg) / Unit
46 lb. (20.87 kg) / 8-Unit Master Pack

## Materials of Construction

**Body, Ring, Top Plate** ..... Zinc

**Bottom Plug, Innervalve** ..... Brass

**Seals** ..... Buna N



**Parker Hannifin Corporation**
Pneumatic Division
Richland, Michigan
www.wattsfluidair.com

# R119 – Pilot Operated Regulators

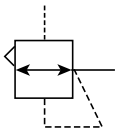

## Features

- Adapted for control by a remote or distant small pilot regulator. Ideal for maximum capacity requirements in applications where units are not readily accessible
- High flow performance featuring rugged design for the most demanding applications
- Ideal for those installations calling for constant pressure with wide variation in flow
- Piston operated design with balanced poppet and dual constant bleed for quick and accurate regulation
- High flow: 2" & 2-1/2" – 1800 SCFM§

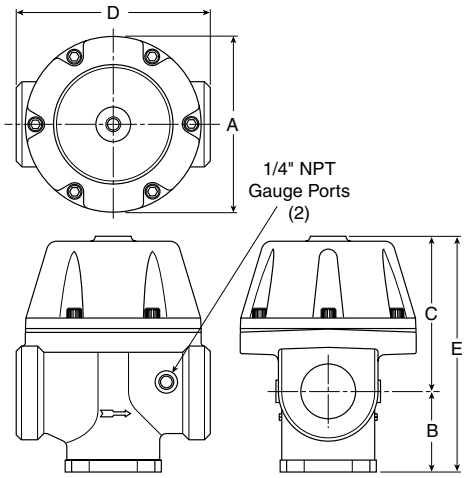


| Port Size | NPT |
|---|---|
| | Relieving |
| Without Gauge 0-125 PSIG Reduced Pressure | |
| 2" | **R119-16J** |
| 2-1/2" | **R119-20J** |

**Standard part numbers shown bold.**
**For other models refer to ordering information below.**

§ SCFM = Standard Cubic Feet Per Minute at 100 PSIG Inlet, 75 PSIG No Flow Secondary Setting, and 20 PSIG Pressure Drop.

| R119-16J, R119-20J Pilot Regulator Dimensions | | | | |
|---|---|---|---|---|
| A | B | C | D | E |
| 6.63 (168) | 3.09 (79) | 7.78 (147) | 7.31 (185) | 10.87 (276) |

inches (mm)

**⚠ WARNING**

**Product rupture can cause serious injury.**
**Do not connect regulator to bottled gas.**
**Do not exceed maximum primary pressure rating.**

## Ordering Information

| R | 119 | — | 16 | J |
|---|---|---|---|---|

| Port Threads |
|---|
| – NPT |
| G BSPP |

| Port Size |
|---|
| 16 2 Inch |
| 20 2-1/2 Inch |

| Reduced Pressure Range |
|---|
| J Air Pilot Operated |

NOTE: Non-Relieving Not Available.

**BOLD ITEMS ARE MOST POPULAR.**



**Parker Hannifin Corporation**
Pneumatic Division
Richland, Michigan
www.wattsfluidair.com

## Technical Information

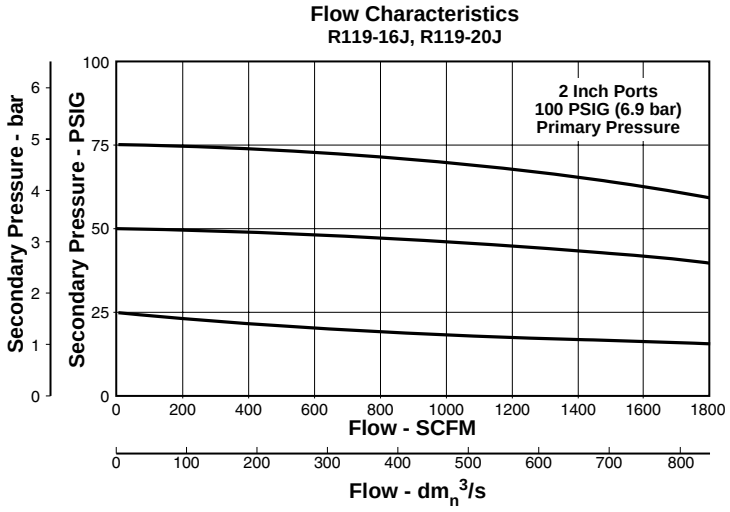


## R119 Regulator Kits & Accessories

**Gauges –**

**2" Dial Face**

60 psig (0 to 4.1 bar) ..... K4520N14060
160 psig (0 to 11.0 bar) ..... K4520N14160
300 psig (0 to 20.0 bar) ..... K4520N14300

**1-3/4" Digital Round Face**

160 psig (0 to 11.0 bar) ..... K4517N14160D

**Repair Kits –**

Piston Type Regulation (2", 2-1/2") ..... RK119G

Piston & Cylinder Kit ..... SA119-0291

Cylinder Only Kit ..... 118F29

## Specifications

**Gauge Ports (2)** ..... 1/4 Inch
(Can be used for Full Flow)
High Pressure Outlet for Pilot (Not seen in photo) ..... 1/4 Inch

**Port Threads** ..... 2, 2-1/2 Inch

**Reduced Pressure Range –**
Adjustable to Within 5 to 7 PSIG of Supply Pressure

**Supply Pressure** ..... 300 PSIG Maximum (20.4 bar)

**Air Consumption –**
Constant Bleed from Air Pilot Chamber:
Approximately 0.17 SCFM (10 SCFH)

Constant Bleed from Reduced Pressure:
Approximately 0.17 SCFM (10 SCFH)

**Temperature Rating** ..... 40°F to 120°F (4.4°C to 48.9°C)

**Weight –**
R119-16J, R119-20J ..... 11 lb. (4.99 kg) / Unit
12 lb. (5.44 kg) / 1-Unit Master Pack

## Materials of Construction

**Body, Piston** ..... Aluminum

**Seals** ..... Buna N

**Innervalve** ..... Brass & Stainless



**Parker Hannifin Corporation**
Pneumatic Division
Richland, Michigan
www.wattsfluidair.com

# Filter / Regulators

- Pipe Sizes 1/8 thru 1-1/2 Inch
- Flows to 200 SCFM
- Pressures to 250 psig

Integral Filter / Regulators are an excellent choice where accurate pressure regulation and high moisture removal efficiency are required in a space saving package.

## Filter / Regulator Selection

1. Determine maximum system flow requirements.
2. Determine maximum allowable pressure drop at rated flow in SCFM.
3. Refer to flow chart and select filter/regulator by choosing the curve that offers minimum pressure drop at desired flow in SCFM.

## Reading Flow Charts to Size Filter / Regulators

Once the required flow is determined for a pneumatic application the regulator or filter/regulator can be selected by using the flow chart. The chart serves two different purposes. To read the flow, use the right side of the chart. To read the relief characteristics use the left side of the chart. When reading the flow chart, first determine the secondary pressure that will be used. Find the appropriate pressure curve on the graph. Given an acceptable pressure drop for an application, follow the flow curve until it intersects the pressure drop point. This will give the flow at that particular pressure drop.

**⚠ WARNING**

**Product rupture can cause serious injury.**
**Do not connect regulator to bottled gas.**
**Do not exceed maximum primary pressure rating.**

**⚠ CAUTION:**

**REGULATOR PRESSURE ADJUSTMENT –** The working range of knob adjustment is designed to permit outlet pressures within their full range. Pressure adjustment beyond this range is also possible because the knob is not a limiting device. This is a common characteristic of most industrial regulators, and limiting devices may be obtained only by special design.
For best performance, regulated pressure should always be set by increasing the pressure up to the desired setting.

**⚠ Warning**

**The plastic material used to manufacture the plastic bowls, and the sight gauge on metal bowls, may be attacked by certain chemicals. Do not use this lfilter regulator on systems with air supplied by a compressor lubricated with synthetic oils or oils containing phosphate esters or chlorinated hydrocarbons. These oils can carry over into the air lines and chemically attack and possibly rupture the bowl or sight gauge. Also, do not expose the bowl or sight gauge to materials such as carbon tetrachloride, trichlorethylene, acetone, paint thinner, cleaning fluids, or other harmful materials, for they too will cause the plastic to craze and/or rupture. For use in environments where these, or any, chemicals may be present, consult the factory for approval.**


Parker Hannifin Corporation
Pneumatic Division
Richland, Michigan
www.wattsfluidair.com

## Filter / Regulators

Turning the adjusting knob clockwise applies a load to control spring which forces the piston / diaphragm and valve poppet assembly to move downward allowing filtered air to flow through the seat area created between the poppet assembly and the seat. “First stage filtration” begins when air pressure supplied to the inlet port is directed through deflector plate causing a swirling centrifugal action forcing liquids and coarse particles to the inner bowl wall and down below the lower baffle to the quiet zone. After liquids and large particles are removed in the first stage of filtration “second stage filtration” occurs as air flows through element where smaller particles are filtered out and retained. The air flow now passes through seat area to the outlet port of the unit. Pressure in the downstream line is sensed below the piston / diaphragm and offsets the load of control spring. When downstream pressure reaches the set-point, poppet valve assembly and piston / diaphragm move upward closing seat area. Should downstream pressure exceed the desired regulated pressure, the excess pressure will cause the piston / diaphragm to move upward opening vent hole venting the excess pressure to atmosphere through the hole in the bonnet. (This occurs in the standard relieving type regulator only.)

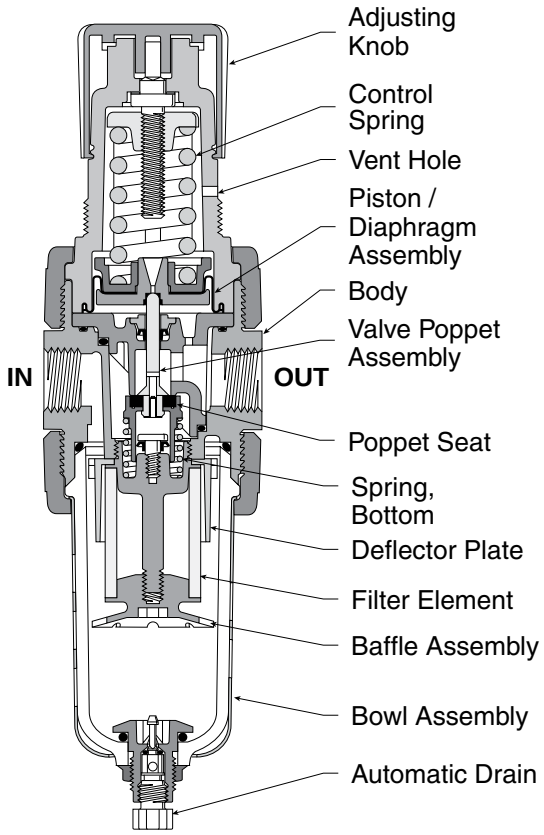


### Semi Automatic Drain

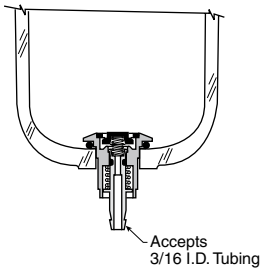


(Overnight Drain)

This drain offers a semi-automatic function when there is a differential pressure in the filter which occurs when system pressure is shut off. The drain can also be used manually by gripping it with your fingertips and pushing upward.

### Automatic Pulse Drain

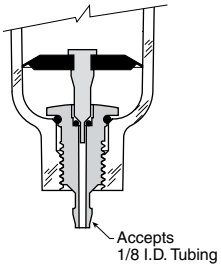


(Spitter Drain)

The diaphragm in this drain pulses when there is a pressure differential such as a valve cycling or cylinder stroking downstream. This action flexes the diaphragm and allows the filter to drain the entrapped water.

### Automatic Float Drain

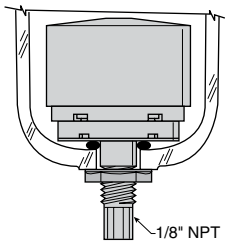


The float internal to this drain rises with increased liquid level. When the float rises, it opens a seat area allowing the trapped liquids to drain through the bottom.
A manual override can be pushed in the bottom of the drain to unseat the float if particulates create a block.



**Parker Hannifin Corporation**
Pneumatic Division
Richland, Michigan
www.wattsfluidair.com

# 14E Filter / Regulator – Miniature

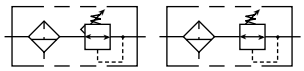

## Features

- Excellent water removal efficiency
- Unbalanced poppet standard
- Solid control piston for extended life
- Space saving package offers both filter and regulator features in one integral unit
- Non-rising adjustment knob
- Two full flow 1/8" gauge ports
- High flow: 1/8" – 16 SCFM§
  1/4" – 18 SCFM§

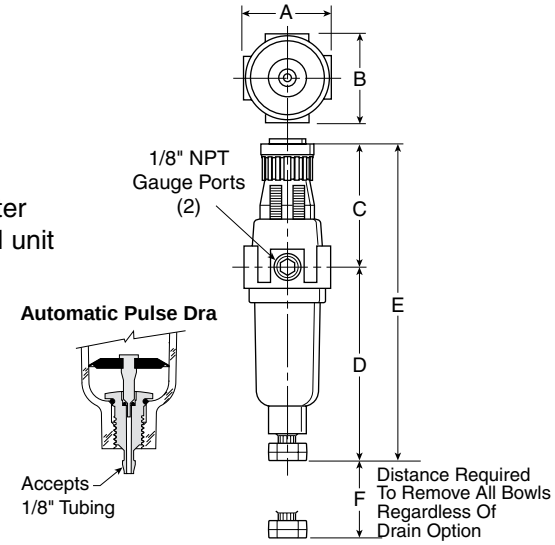


| Port Size | NPT | |
|---|---|---|
| | Twist Drain | Automatic Pulse Drain |
| Poly Bowl‡ | | |
| 1/8" | **14E01B13F*** | **14E05B13F*** |
| 1/4" | **14E11B13F*** | **14E15B13F*** |
| Metal Bowl | | |
| 1/8" | **14E03B13F*** | **14E07B13F*** |
| 1/4" | **14E13B13F*** | **14E17B13F*** |

**Standard part numbers shown bold.**
**For other models refer to ordering information below.**

NOTE: 1.218 Dia. (31mm) hole required for panel mounting.

‡ For polycarbonate bowl see Caution on page inside cover.

§ SCFM = Standard cubic feet per minute at 100 PSIG inlet, 90 PSIG no flow secondary setting and 10 PSIG pressure drop.

**14E Filter / Regulator Dimensions**

| A | B | C |
|---|---|---|
| 1.62 (41) | 1.58 (40) | 2.42 (61) |
| **D** | **D†** | **E** |
| 3.79 (96) | 3.64 (92) | 6.21 (158) |
| **E†** | **F** | |
| 6.06 (154) | 1.60 (41) | |

Inches (mm)
† With Auto Drain

## Ordering Information

**BOLD ITEMS ARE MOST POPULAR.**

| 14E | 1 | 1 | B | 13 | F | * | | | |
|---|---|---|---|---|---|---|---|---|---|

**Port Size**

| | |
|---|---|
| **0** | **1/8 Inch** |
| **1** | **1/4 Inch** |

**Elements**

| | |
|---|---|
| A | 40 Micron |
| **B** | **5 Micron** |
| Z | Adsorber |

**Relief**

| | |
|---|---|
| **F** | **Relieving** |
| G | Non-Relieving |
| H | Low Temp. Relieving |

**Port Type**

| Blank | NPT |
|---|---|
| 1 | BSPP |
| 2 | BSPT |

**Preset / Pressure Limited**

| Blank | None |
|---|---|
| XXX* | Preset Pressure |
| XXX* | Pressure Limited |

* Available Preset / Pressure Limited Range, 10 to 90 PSIG in 5 PSIG increments. For higher pressures, contact factory.
(Example: 065 = 65 PSIG)

**Bowl Options**

| |
|---|
| Polycarbonate Bowl |
| **1 Twist Drain** |
| **5 Automatic Drain** |
| Metal Bowl |
| **3 Twist Drain** |
| **7 Automatic Drain** |

**Pressure Range**

| Without Gauge | | With Gauge | |
|---|---|---|---|
| 10 | 30 PSIG | 15 | 30 PSIG |
| 11 | 60 PSIG | 16 | 60 PSIG |
| 12 | 15 PSIG | 17 | 15 PSIG |
| **13** | **125 PSIG** | 18 | 125 PSIG |

**Engineering Level**

| | |
|---|---|
| * | Will be Entered at Factory |

**Options**

| Blank | No Options |
|---|---|
| L† | Preset Non-Adjustable |
| P† | Preset Adjustable |
| S† | Pressure Limiter Max. Adjustable |
| T† | Pressure Limiter Max. |

† Inlet Pressure is 100 PSIG. For other pressures, contact factory.

**Spring Type by Preset / Limited Pressure:**
For Preset / Limited Pressure 10 to 25 use 30 PSI Spring
For Preset / Limited Pressure 26 to 50 use 60 PSI Spring
For Preset / Limited Pressure 51 to 90 use 125 PSI Spring



**Parker Hannifin Corporation**
Pneumatic Division
Richland, Michigan
www.wattsfluidair.com

## Technical Information

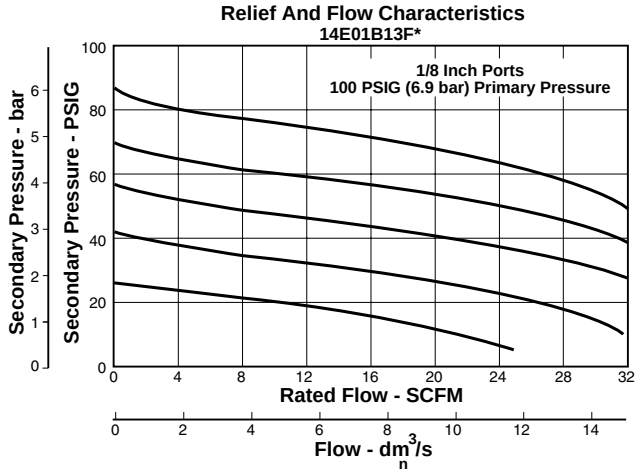


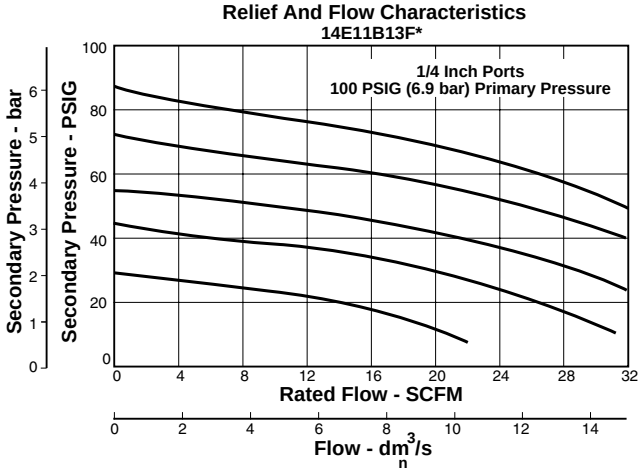


**⚠ WARNING**

**Product rupture can cause serious injury.**
**Do not connect regulator to bottled gas.**
**Do not exceed maximum primary pressure rating.**

**⚠ CAUTION:**

**REGULATOR PRESSURE ADJUSTMENT –** The working range of knob adjustment is designed to permit outlet pressures within their full range. Pressure adjustment beyond this range is also possible because the knob is not a limiting device. This is a common characteristic of most industrial regulators, and limiting devices may be obtained only by special design.
For best performance, regulated pressure should always be set by increasing the pressure up to the desired setting.

## 14E Filter / Regulator Kits & Accessories

**Bowl Kits –**
Polycarbonate Bowl – Automatic Drain ..... PS408B
Twist Drain ..... PS404
Metal Bowl – Automatic Drain ..... PS451B
Twist Drain ..... PS447B

**Filter Element Kits –** 40 Micron ..... PS401
5 Micron ..... PS403
Adsorber ..... PS452

**Gauges –** 30 PSIG (0 to 2.1 bar) ..... K4515N18030
60 PSIG (0 to 4.1 bar) ..... K4515N18060
160 PSIG (0 to 11.0 bar) ..... K4515N18160

**Mounting Bracket Kit*** (Includes Panel Mount Nut) ..... PS417B

**Panel Mount Nut*** ..... P78652

**Poppet / Piston Kits –** Unbalanced Non-Relieving ..... PS428
Unbalanced Relieving ..... PS426

**Springs –** 1- 15 PSIG Range (Yellow) ..... P01176
1- 30 PSIG Range (Black) ..... P01175
1- 60 PSIG Range (White) ..... P01174
2- 125 PSIG Range (Gold) ..... P01173

## Specifications

**Automatic Pulse Drain Tube Barb** ..... 1/8 Inch
**Bowl Capacity** ..... 1 Ounce
**Gauge Ports (2)** (Can be used for Full Flow) ..... 1/8 Inch
**Port Threads** ..... 1/8, 1/4 Inch

*Tighten panel mount nut 2.8 to 3.4 Nm (25 to 30 in-lbs) of torque.

**Pressure & Temperature Ratings –**
Polycarbonate Bowl –
0 to 150 PSIG (0 to 10.3 bar), 32°F to 125°F (0°C to 52°C)
Metal Bowl –
0 to 250 PSIG (0 to 17.2 bar), 32°F to 175°F (0°C to 80°C)

**Secondary Pressure Ranges –**
Standard Pressure ..... 2 to 125 PSIG (0 to 8.6 bar)
Medium Pressure ..... 1 to 30 PSIG (0 to 2.1 bar)
Medium Pressure ..... 1 to 60 PSIG (0 to 4.1 bar)
Low Pressure ..... 1 to 15 PSIG (0 to 1 bar)

**Weight** ..... 0.4 lb. (0.18 kg)

## Materials of Construction

**Adjusting Nut** ..... Brass
**Adjusting Stem & Spring** ..... Steel
**Body** ..... Zinc
**Bonnet, Knob, Seat, Piston, Holder & Deflector** ..... Plastic
**Bowls Available –**
Transparent ..... Polycarbonate
Metal (Without Sight Gauge) ..... Zinc
**Drains –** ..... Manual – Twist Type
Body & Stem ..... Plastic
Seals ..... Nitrile
Automatic – Pulse Type
Piston & Seals ..... Nitrile
Stem, Seat, Adaptor & Washers ..... Aluminum
**Filter Elements –** ..... 5 Micron (Standard)
Plastic –
40 Micron (Optional) ..... Plastic
Adsorber (Optional) ..... Activated Charcoal
**Seals** ..... Nitrile



**Parker Hannifin Corporation**
Pneumatic Division
Richland, Michigan
www.wattsfluidair.com

# B34 Filter / Regulator – Miniature

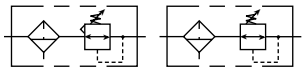

## Features

- Excellent water removal efficiency
- Diaphragm operated for fast operation
- Large diaphragm to valve area for precise regulation and high flow capacity
- Balanced valve design for precise regulation
- Space saving package offers both filter and regulator features in one integral unit
- Non-rising adjustment knob
- High flow: 1/8" – 12 SCFM§
  1/4" – 12 SCFM§

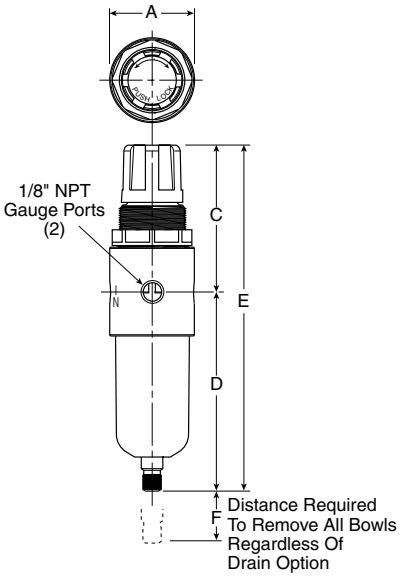


| Port Size | NPT |
|---|---|
| | Manual Twist Drain |
| Poly Bowl‡ | |
| 1/8" | **B344-01AGC** |
| 1/4" | **B344-02AGC** |
| Metal Bowl without Sight Gauge | |
| 1/8" | **B344-01DGC** |
| 1/4" | **B344-02DGC** |

**Standard part numbers shown bold.**
**For other models refer to ordering information below.**
NOTE: 1.218 Dia. (31mm) hole required for panel mounting.
‡ For polycarbonate bowl see Caution on page inside cover.
§ SCFM = Standard cubic feet per minute at 100 PSIG inlet, 75 PSIG no flow secondary setting and 25% pressure drop.

| B34 Filter / Regulator Dimensions | | |
|---|---|---|
| **A** | **C** | **D** |
| 1.54 (39.2) | 2.68 (68.1) | 3.63 (92.1) |
| **E** | **F** | |
| 6.31 (160.2) | 1.65 (41.9) | |

Inches (mm)
† With Auto Drain

**Standard part numbers shown bold.**
**For other models refer to ordering information below.**
**NOTE: 1.218 Dia. (31mm) hole required for panel mounting.**
‡ For polycarbonate bowl see Caution on inside cover.
§ SCFM = Standard cubic feet per minute at 100 PSIG inlet, 75 PSIG no flow secondary setting and 25% pressure drop.

## Ordering Information

| B34 | 4 | — | 02 | A | G | C | |
|---|---|---|---|---|---|---|---|

**Number of Ports**
- 2 2 Ports
- **4 4 Ports**

**Port Threads**
- **– NPT**
- G BSPP

**Port Size**
- **01 1/8 Inch**
- **02 1/4 Inch**

**Bowl**
- **A Polycarbonate Bowl**
- D Metal without Sight Gauge

**Elements**
- G 5 Micron

**Reduced Pressure Range**
- A 0-25 PSIG
- B 0-60 PSIG
- **C 0-125 PSIG**

**Options**
- **Blank None**
- G Gauge
- K Non-Relieving
- P Panel Mount (Plastic)
- S Automatic Pulse Drain

**BOLD ITEMS ARE MOST POPULAR.**



**Parker Hannifin Corporation**
Pneumatic Division
Richland, Michigan
www.wattsfluidair.com

## Technical Information

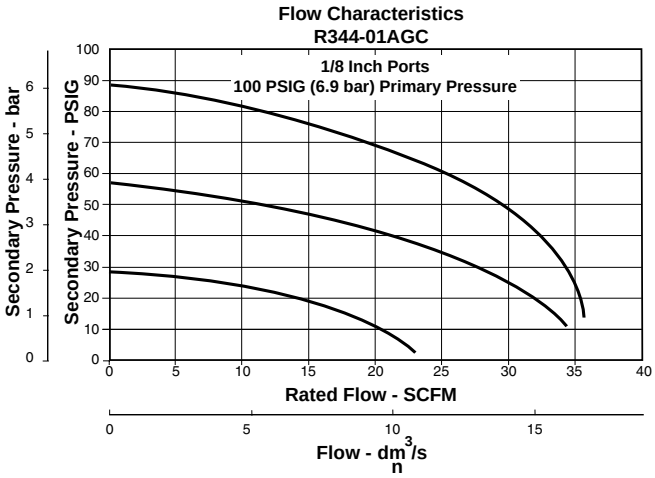


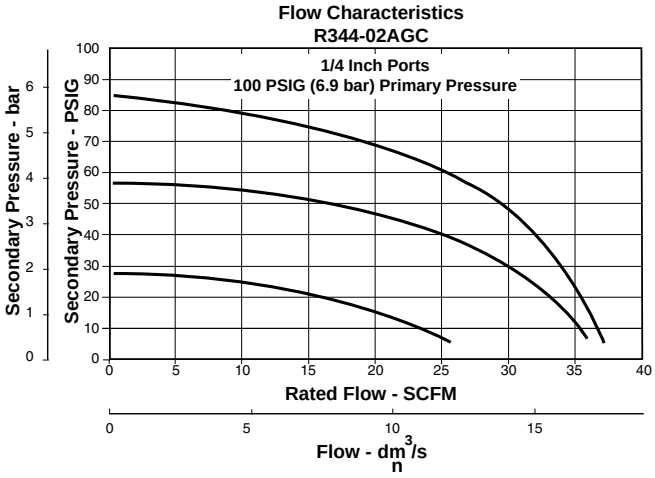


**⚠ WARNING**

**Product rupture can cause serious injury.**
**Do not connect regulator to bottled gas.**
**Do not exceed maximum primary pressure rating.**

**⚠ CAUTION:**

**REGULATOR PRESSURE ADJUSTMENT –** The working range of knob adjustment is designed to permit outlet pressures within their full range. Pressure adjustment beyond this range is also possible because the knob is not a limiting device. This is a common characteristic of most industrial regulators, and limiting devices may be obtained only by special design.
For best performance, regulated pressure should always be set by increasing the pressure up to the desired setting.

## B34 Filter / Regulator Kits & Accessories

**Adjusting Knob** ..... RRP-16-005-000

**Bowl Kits –**
- Zinc (D) ..... BK505Y
- Zinc with Automatic Pulse Drain (D) ..... BK505SY
- Polycarbonate (A) ..... BK504Y
- Polycarbonate with Automatic Pulse Drain (A) ..... BK504SY

**Drain Kits –**
- Automatic Pulse Drain (Maximum Pressure = 175 PSIG) ..... RK504SY

**Filter Element Kits –**
- 5 Micron (All) ..... FRP-96-729

**Gauges –**
- 1-1/2" Dial Size, 1/8" Back Connection 0 to 60 PSIG (0 to 400 kPa) ..... K4515N18060
- 1-1/2" Dial Size, 1/8" Back Connection 0 to 160 PSIG (0 to 1100 kPa) ..... K4515N18160

**Mounting Bracket Kit (Includes Plastic Panel Nut)** ..... SA161X57

**Panel Mount Nut –**
- Plastic ..... R05X51-P
- Aluminum ..... R05X51-A

**Repair Kits –**
- Non-Relieving Diaphragm, Valve Assembly (All) ..... GRP-96-726
- Relieving Diaphragm, Valve Assembly (All) ..... GRP-96-725

**Springs –** 0-25 ..... GRP-95-111
- 0-60 ..... GRP-96-718
- 0-125 ..... GRP-96-717

## Specifications

**Bowl Capacity** ..... 1 Ounce

**Gauge Ports (2)** ..... 1/8 Inch

**Maximum Pressure –**
- Zinc Bowl (D) ..... 0 to 300 PSIG
- Polycarbonate Bowl (A) ..... 0 to 150 PSIG

**Reduced Pressure Range –**
- 0 to 25 PSIG ..... (0 to 1.7 bar) (A)
- 0 to 60 PSIG ..... (0 to 4.1 bar) (B)
- 2 to 125 PSIG ..... (0.15 to 8.5 bar) (C)

**Temperature Rating** ..... 40°F to 125°F (4.4°C to 52°C)

**Port Threads** ..... 1/8 &1/4 Inch

**Weight –**
- Zinc Bowl (D) ..... 0.6 lb. (0.27 kg) / Unit
  12 lb. (5.44 kg) / 24-Unit Master Pack
- Polycarbonate Bowl (A) ..... 0.3 lb. (0.14 kg) / Unit
  6 lb. (2.72 kg) / 24-Unit Master Pack

## Materials of Construction

**Adjusting Knob** ..... Acetal

**Body** ..... Aluminum

**Bowls –**
- Polycarbonate (A) ..... Polycarbonate
- Metal (D) ..... Zinc
  Zinc with Automatic Pulse Drain

**Elastomers** ..... Buna N

**Filter Element** ..... Sintered Polyethylene

**Filter Retainer, Vane Plate** ..... Acetal

**Innervalve, Diaphragm, Button, Drain** ..... Brass



**Parker Hannifin Corporation**
Pneumatic Division
Richland, Michigan
www.wattsfluidair.com

# B548 Filter / Regulator – Miniature

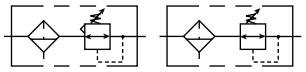

## Features

- Excellent water removal efficiency
- Unbalanced poppet standard
- Solid control piston for extended life
- Space saving package offers both filter and regulator features in one integral unit
- Non-rising adjustment knob
- High flow: 12 SCFM §

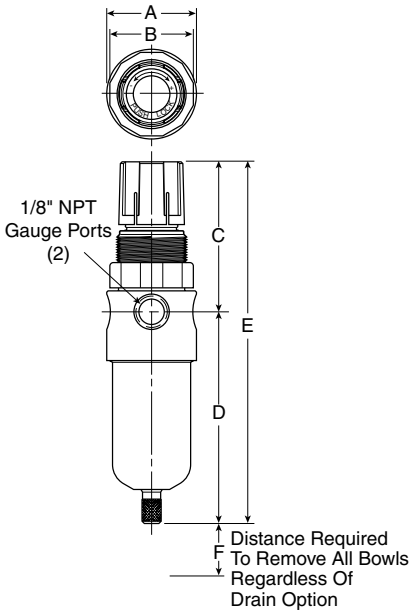


| Port Size | NPT |
|---|---|
| | Manual Twist Drain |
| Poly Bowl‡ | |
| 1/8" | **B548-01AHC** |
| 1/4" | **B548-02AHC** |
| Metal Bowl without Sight Gauge | |
| 1/8" | **B548-01DHC** |
| 1/4" | **B548-02DHC** |

**Standard part numbers shown bold.**
**For other models refer to ordering information below.**

NOTE: 1.218 Dia. (31mm) hole required for panel mounting.

‡ For polycarbonate bowl see Caution on page inside cover.

§ SCFM = Standard cubic feet per minute at 100 PSIG inlet, 75 PSIG no flow secondary setting and 25% pressure drop.

| B548 Filter / Regulator Dimensions | | |
|---|---|---|
| **A** | **B** | **C** |
| 1.55 (39.2) | 4.44 (36.5) | 2.58 (65.6) |
| **D** | **E** | **F** |
| 6.23 (158.2) | 3.81 (96.7) | .86 (21.9) |

Inches (mm)
† With Auto Drain

## Ordering Information

| B | 548 | — | 02 | A | H | C | | /** |
|---|---|---|---|---|---|---|---|---|

**Port Threads**
- **– NPT**
- G BSPP

**Port Size**
- **01 1/8 Inch**
- **02 1/4 Inch**

**Bowl**
- **A Polycarbonate Bowl**
- D Metal without Sight Gauge

**Elements**
- G 5 Micron
- **H 20 Micron**

**Reduced Pressure Range**
- A 0-25 PSIG
- B 0-60 PSIG
- **C 0-125 PSIG**

**Options**
- G Gauge
- K Non-Relieving
- P Panel Mount (Plastic)
- S Automatic Pulse Drain
- T Tamperproof
- U Semi-Auto Drain
- X64 Fluorocarbon O-rings & Diaphragm
- X33* Polyurethane Bowl

* Add .65" to overall length.

**Engineering Change Designator**
- Will be entered at factory.

**BOLD ITEMS ARE MOST POPULAR.**



**Parker Hannifin Corporation**
Pneumatic Division
Richland, Michigan
www.wattsfluidair.com

## Technical Information

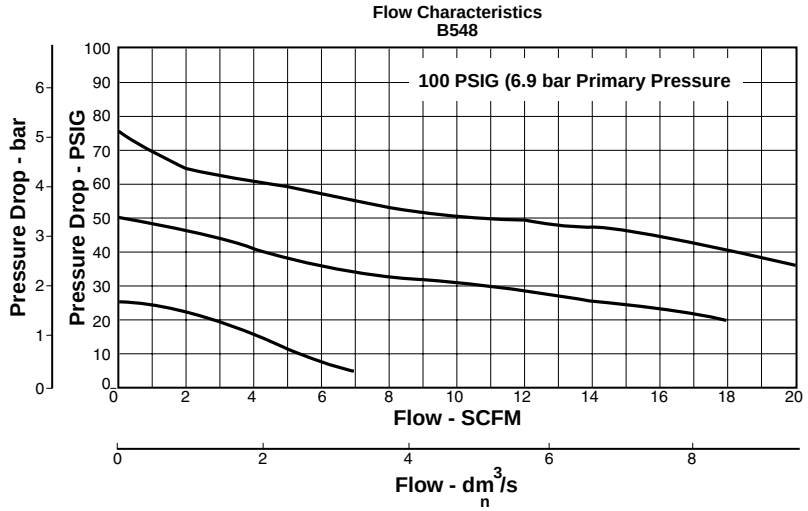


**⚠ WARNING**

**Product rupture can cause serious injury.**
**Do not connect regulator to bottled gas.**
**Do not exceed maximum primary pressure rating.**

**⚠ CAUTION:**

**REGULATOR PRESSURE ADJUSTMENT –** The working range of knob adjustment is designed to permit outlet pressures within their full range. Pressure adjustment beyond this range is also possible because the knob is not a limiting device. This is a common characteristic of most industrial regulators, and limiting devices may be obtained only by special design.
For best performance, regulated pressure should always be set by increasing the pressure up to the desired setting.

## B548 Filter / Regulator Kits & Accessories

**Bowl Kits –**
- Zinc (D) ..... BK505Y
- Zinc with Automatic Pulse Drain (D) ..... BK505SY
- Polycarbonate (A) ..... BK504Y
- Polycarbonate with Automatic Pulse Drain (A) ..... BK504SY

**Cage Kits** (All) ..... CKR364Y

**Drain Kits –**
- Automatic Pulse Drain (Maximum Pressure = 175 PSIG) ..... RK504SY
- Semi-Automatic "Overnight" Drain ..... SA602A7 (Drains automatically under zero pressure)

**Filter Element Kits –**
- 20 Micron (All) ..... EK504Y
- 5 Micron (All) ..... EK504VY

**Gauges –**
- 1-1/2" Dial Size, 1/8" Back Connection 0 to 60 PSIG (0 to 400 kPa) ..... K4515N18060
- 1-1/2" Dial Size, 1/8" Back Connection 0 to 160 PSIG (0 to 1100 kPa) ..... K4515N18160

**Mounting Bracket Kit (Includes Plastic Panel Nut)** ..... SA161X57

**Panel Mount Nut –**
- Plastic ..... R05X51-P
- Aluminum ..... R05X51-A

**Repair Kits –**
- Non-Relieving Diaphragm, Valve Assembly (All) ..... RK548Y
- Relieving Diaphragm, Valve Assembly (All) ..... RK549Y

For Fluorocarbon Repair Kits, add X64 to Kit Number suffix.

## Specifications

**Bowl Capacity** ..... 1 Ounce

**Gauge Ports (2)** ..... 1/8 Inch

**Maximum Pressure –**
- Zinc Bowl (D) ..... 0 to 300 PSIG
- Polycarbonate Bowl (A) ..... 0 to 150 PSIG

**Reduced Pressure Range –**
- 0 to 25 PSIG ..... (0 to 1.7 bar) (A)
- 0 to 60 PSIG ..... (0 to 4.1 bar) (B)
- 2 to 125 PSIG ..... (0.15 to 8.5 bar) (C)

**Temperature Rating** ..... 40°F to 125°F (4.4°C to 52°C)

**Port Threads** ..... 1/4 Inch

**Weight –**
- Zinc Bowl (D) ..... 0.6 lb. (0.27 kg) / Unit
  12 lb. (5.44 kg) / 24-Unit Master Pack
- Polycarbonate Bowl (A) ..... 0.3 lb. (0.14 kg) / Unit
  6 lb. (2.72 kg) / 24-Unit Master Pack

## Materials of Construction

**Adjusting Knob** ..... Acetal

**Body** ..... Aluminum

**Bowls –**
- Polycarbonate (A) ..... Polycarbonate
- Metal (D) ..... Zinc
  Zinc with Automatic Pulse Drain

**Elastomers** ..... Buna N

**Filter Element** ..... Sintered Polypropylene

**Filter Retainer, Vane Plate** ..... Acetal

**Innervalve, Diaphragm, Button, Drain** ..... Brass



**Parker Hannifin Corporation**
Pneumatic Division
Richland, Michigan
www.wattsfluidair.com

# B11 Filter / Regulators – Compact

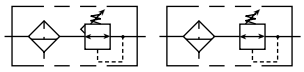

## Features

- Space saving package offers both filter and regulator features for optimal performance
- Excellent water removal efficiency
- Rolling diaphragm for extended life
- Quick response, and accurate pressure regulation regardless of changing flow or inlet pressure
- Two high flow 1/4" gauge ports can be used as additional outlets
- Shown with recommended metal bowl guard
- High flow: 1/4" – 46 SCFM§
  3/8" – 55 SCFM§
  1/2" – 61 SCFM§

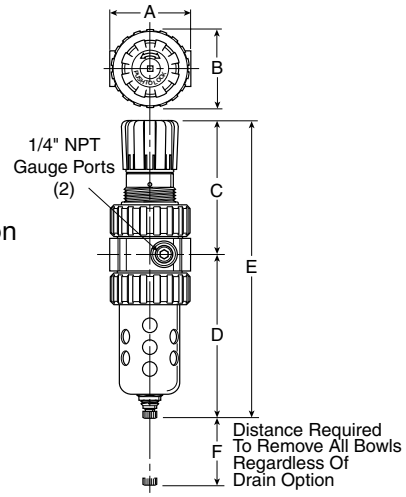


| Port Size | NPT | |
|---|---|---|
| | Twist Drain | Auto Float Drain |
| Poly Bowl‡ / Metal Guard | | |
| 1/4" | **B11-022A11A*** | **B11-026A11A*** |
| 3/8" | **B11-032A11A*** | **B11-036A11A*** |
| 1/2" | **B11-042A11A*** | **B11-046A11A*** |
| Metal Bowl / Sight Gauge | | |
| 1/4" | **B11-024A11A*** | **B11-028A11A*** |
| 3/8" | **B11-034A11A*** | **B11-038A11A*** |
| 1/2" | **B11-044A11A*** | **B11-048A11A*** |

| B11 Filter / Regulator Dimensions | | | |
|---|---|---|---|
| **A** | **B** | **C** | **D** |
| 2.81 (71) | 2.74 (70) | 4.69 (119) | 5.69 (145) |
| **D†** | **E** | **E†** | **F** |
| 5.74 (146) | 10.38 (264) | 10.43 (265) | 2.25 (57) |

Inches (mm)
† With Twist Drain or Auto Pulse Drain

**Standard part numbers shown bold.**
**For other models refer to ordering information below.**
NOTE: 1.218 Dia. (31mm) hole required for panel mounting.
‡ For polycarbonate bowl see Caution on page inside cover.
§ SCFM = Standard cubic feet per minute at 100 PSIG inlet, 75 PSIG no flow secondary setting and 25% pressure drop.

**⚠ WARNING**

**Product rupture can cause serious injury.**
**Do not connect regulator to bottled gas.**
**Do not exceed maximum primary pressure rating.**

## Ordering Information

| B11 | — | 02 | 2 | A | 11 | A | * | |
|---|---|---|---|---|---|---|---|---|

**Port Threads**
- **– NPT**
- G BSPP

* 1/4 & 3 inch meet ISO 1179-1 Standard.

**Port Size**
- **02 1/4 Inch**
- **03 3/8 Inch**
- **04 1/2 Inch**

**Element**
- **A 40 Micron**

**Relief**
- **A Relieving**
- L Non- Relieving

**Options**
- **Blank No Options**
- L† Preset Non-Adjustable
- P† Preset Adjustable
- R Reverse Flow

† Inlet Pressure is 100 PSIG. For other pressures, contact factory.

**Engineering Level**
- * Will be Entered at Factory

**Pressure Range**

Without Gauge
- **11 0-60 PSIG**
- **13 0-125 PSIG**
- 15§ 0-250 PSIG

With Gauge
- **16 0-60 PSIG**
- **18 0-125 PSIG**
- 21§ 0-250 PSIG

§ If 250 psig spring range is used, use metal bowl.

**Bowl Options**

| Polycarbonate Bowl | Metal Bowl |
|---|---|
| **2 Metal Bowl Guard / Twist Drain** | 3 Twist Drain |
| **6 Metal Bowl Guard / Auto Float Drain** | **4 Sight Gauge / Twist Drain** |
| | 7 Auto Float Drain |
| | **8 Sight Gauge / Auto Float Drain** |

**BOLD ITEMS ARE MOST POPULAR.**



**Parker Hannifin Corporation**
Pneumatic Division
Richland, Michigan
www.wattsfluidair.com

## Technical Information

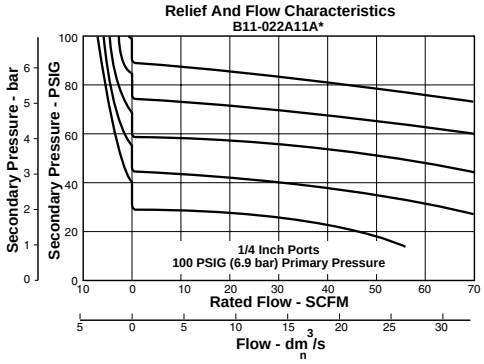


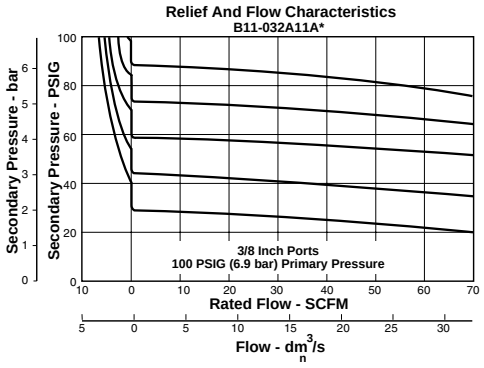


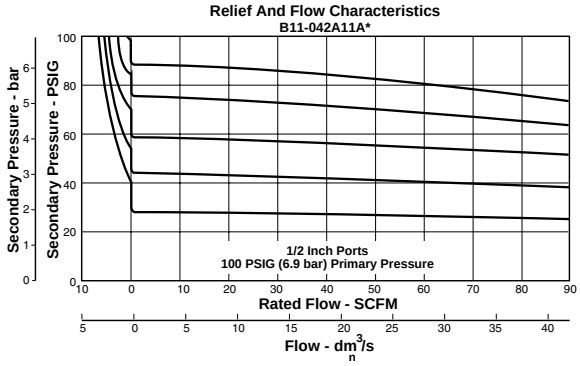


### ⚠ CAUTION:

**REGULATOR PRESSURE ADJUSTMENT –** The working range of knob adjustment is designed to permit outlet pressures within their full range. Pressure adjustment beyond this range is also possible because the knob is not a limiting device. This is a common characteristic of most industrial regulators, and limiting devices may be obtained only by special design.
For best performance, regulated pressure should always be set by increasing the pressure up to the desired setting.

## B11 Filter / Regulator Kits & Accessories

**Bonnet Assembly Kit** ..... PS715
**Bowl Guard Kit** ..... PS705
**Bowl Kits –**
Poly Bowl – Automatic Float Drain ..... PS722
Twist Drain ..... PS732
Metal Bowl – Automatic Float Drain ..... PS726
Twist Drain ..... PS734
Sight Gauge / Automatic Drain ..... PS723
Sight Gauge / Twist Drain ..... PS735P
**Control Knob** ..... P04069B
**Drain Kits –** Automatic Float Drain ..... PS506
Twist Drain ..... PS512
**Filter Element Kits –** 40 Micron ..... PS701
**Gauges – 2" Dial Face**
60 psig (0 to 4.1 bar) ..... K4520N14060
160 psig (0 to 11.0 bar) ..... K4520N14160
300 psig (0 to 20.0 bar) ..... K4520N14300
**1-3/4" Digital Round Face**
160 psig (0 to 11.0 bar) ..... K4517N14160D
**Mounting Bracket Kit** (Includes Panel Mount Nut) ..... PS707
**Panel Mount Nut** ..... P04082
**Service Kits –** Non-Relieving (Includes Poppet) ..... PS711
Relieving (Includes Poppet) ..... PS710
**Seat Insert Kit** ..... PS713
**Springs –** 1- 30 psig Range ..... P01698
1- 60 psig Range ..... P04062
2- 125 psig Range ..... P04063
5- 250 psig Range ..... P04064
**Tamperproof Kit** (Key Lock) ..... PS737

## Specifications

**Bowl Capacity** ..... 4.4 Ounces
**Gauge Ports (2)** ..... 1/4 Inch
(Can be used as Additional Full Flow 1/4" Outlet Ports)
**Port Threads** ..... 1/4, 3/8, 1/2 Inch

**Pressure & Temperature Ratings –**
Polycarbonate Bowl – 0 to 150 psig (0 to 10.4 bar)
32°F to 125°F (0°C to 52°C)
Metal Bowl – 0 to 250 psig (0 to 17.2 bar)
32°F to 175°F (0°C to 80°C)
Automatic Float Drain – 15 to 250 psig (1.0 to 17.2 bar)
**Secondary Pressure Ranges –**
Standard Pressure ..... 2 to 125 psig (0 to 8.6 bar)
Low Pressure ..... 1 to 60 psig (0 to 4.1 bar)
High Pressure ..... 5 to 250 psig (0.4 to 17.2 bar)
**Sump Capacity** ..... 1.75 Ounces
**Weight** ..... 1.6 lb. (0.7 kg)

## Materials of Construction

**Adjusting Stem** ..... Steel
**Body** ..... Zinc
**Bonnet, Internal Parts** ..... Plastic
**Bowls Available –** Transparent ..... Polycarbonate
Metal (With or Without Sight Gauge) ..... Zinc
**Bowl Guard** ..... Steel
**Collar** ..... Plastic
**Diaphragm** ..... Nitrile
**Drains –** Manual Twist Drain Standard
Body & Nut ..... Plastic
Automatic Float Drain Optional
(Interchangeable for Field Conversions)
Operating Range ..... 10 to 250 psig (.7 to 17.2 bar)
Housing, Float ..... Plastic
Seals ..... Nitrile
Springs, Push Rod ..... Stainless Steel
**Knob** ..... Plastic
**Filter Elements –** 40 Micron (Standard) ..... Plastic
**Seals** ..... Nitrile
**Sight Gauge** ..... Polyamide (Nylon)
**Springs –** Poppet ..... Stainless
Control ..... Steel


Parker Hannifin Corporation
Pneumatic Division
Richland, Michigan
www.wattsfluidair.com

# B11 Filter / Regulators – Standard

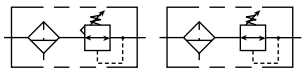

## Features

- Space saving package offers both filter and regulator features for optimal performance
- Excellent water removal efficiency
- Rolling diaphragm for extended life
- Quick response, and accurate pressure regulation regardless of changing flow or inlet pressure
- Two high flow 1/4" gauge ports can be used as additional outlets
- Shown with recommended metal bowl guard
- High flow: 3/4" – 90 SCFM§

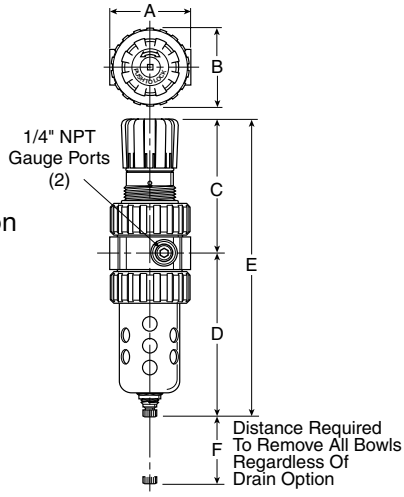


| Port Size | NPT | |
|---|---|---|
| | Twist Drain | Auto Float Drain |
| Poly Bowl‡ / Metal Guard | | |
| 3/4" | **B11-062A11A*** | **B11-066A11A*** |
| Metal Bowl / Sight Gauge | | |
| 3/4" | **B11-064A11A*** | **B11-068A11A*** |

**Standard part numbers shown bold.**
**For other models refer to ordering information below.**
‡ For polycarbonate bowl see Caution on inside cover.
§ SCFM = Standard cubic feet per minute at 100 psig inlet, 90 psig no flow secondary setting and 10 psig pressure drop.
NOTE: 2.00 Dia. (50.8 mm) hole required for panel mounting.
Max. panel thickness 1/4".

| B11 Filter / Regulator Dimensions | | | |
|---|---|---|---|
| **A** | **B** | **C** | **D** |
| 3.24 (82) | 3.25 (83) | 4.79 (122) | 6.97 (177) |
| **D†** | **E** | **E†** | **F** |
| 7.00 (178) | 11.76 (299) | 11.79 (299) | 2.75 (70) |

Inches (mm)
† With Twist Drain or Auto Pulse Drain

**⚠ WARNING**

**Product rupture can cause serious injury.**
**Do not connect regulator to bottled gas.**
**Do not exceed maximum primary pressure rating.**

## Ordering Information

| B11 | — | 06 | 2 | A | 11 | A | * | |
|---|---|---|---|---|---|---|---|---|

**Port Threads**
- **– NPT**
- G BSPP

**Port Size**
- **06 3/4 Inch**

**Element**
- **A 40 Micron**

**Relief**
- **A Relieving**
- L Non- Relieving

**Options**
- **Blank No Options**
- L† Preset Non-Adjustable
- P† Preset Adjustable
- R Reverse Flow

† Inlet Pressure is 100 PSIG. For other pressures, contact factory.

**Bowl Options**

| Polycarbonate Bowl | Metal Bowl |
|---|---|
| **2 Metal Bowl Guard / Twist Drain** | 3 Twist Drain |
| **6 Metal Bowl Guard / Auto Float Drain** | **4 Sight Gauge / Twist Drain** |
| | 7 Auto Float Drain |
| | **8 Sight Gauge / Auto Float Drain** |

**Pressure Range**

Without Gauge
- **11 0-60 PSIG**
- **13 0-125 PSIG**
- 15§ 0-250 PSIG

With Gauge
- **16 0-60 PSIG**
- **18 0-125 PSIG**
- 21§ 0-250 PSIG

§ If 250 psig spring range is used, use metal bowl.

**Engineering Level**
- * Will be Entered at Factory

**BOLD ITEMS ARE MOST POPULAR.**



**Parker Hannifin Corporation**
Pneumatic Division
Richland, Michigan
www.wattsfluidair.com

## Technical Information

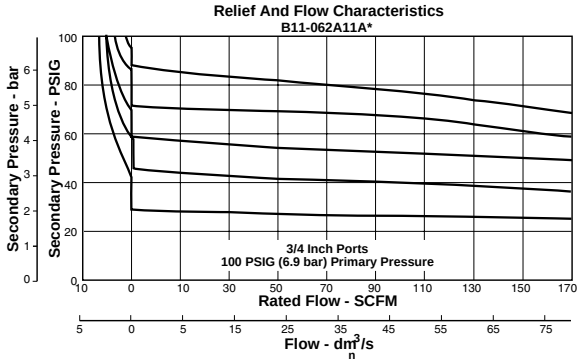


> **⚠ CAUTION:**
> **REGULATOR PRESSURE ADJUSTMENT –** The working range of knob adjustment is designed to permit outlet pressures within their full range. Pressure adjustment beyond this range is also possible because the knob is not a limiting device. This is a common characteristic of most industrial regulators, and limiting devices may be obtained only by special design.
> For best performance, regulated pressure should always be set by increasing the pressure up to the desired setting.

## B11 Filter / Regulator Kits & Accessories

**Bonnet Assembly Kit** ..... PS715

**Bowl Guard Kit** ..... PS805

**Bowl Kits –**
Poly Bowl – Automatic Float Drain ..... PS822
Twist Drain ..... PS832
Metal Bowl – Automatic Float Drain ..... PS826
Twist Drain ..... PS834
Sight Gauge / Automatic Drain ..... PS823
Sight Gauge / Twist Drain ..... PS835

**Control Knob** ..... P04069B

**Drain Kits –** Automatic Float Drain ..... PS506
Twist Drain ..... PS512

**Filter Element Kits –** 40 Micron ..... PS801

**Gauges – 2" Dial Face**
60 psig (0 to 4.1 bar) ..... K4520N14060
160 psig (0 to 11.0 bar) ..... K4520N14160
300 psig (0 to 20.0 bar) ..... K4520N14300

**1-3/4" Digital Round Face**
160 psig (0 to 11.0 bar) ..... K4517N14160D

**Mounting Bracket Kit** (Includes Panel Mount Nut) ..... PS807

**Panel Mount Nut** ..... P04082

**Service Kits –** Non-Relieving (Includes Poppet) ..... PS811
Relieving (Includes Poppet) ..... PS810

**Seat Insert Kit** ..... PS813

**Springs –** 1- 30 psig Range ..... P01698
1- 60 psig Range ..... P04062
2- 125 psig Range ..... P04063
5- 250 psig Range ..... P04064

**Tamperproof Kit** (Key Lock) ..... PS737

## Specifications

**Bowl Capacity** ..... 7.2 Ounces

**Gauge Ports (2)** ..... 1/4 Inch
(Can be used as Additional Full Flow 1/4" Outlet Ports)

**Port Threads** ..... 1/2, 3/4 Inch

**Pressure & Temperature Ratings –**
Polycarbonate Bowl – 0 to 150 psig (0 to 10.4 bar)
32°F to 125°F (0°C to 52°C)
Metal Bowl – 0 to 250 psig (0 to 17.2 bar)
32°F to 175°F (0°C to 80°C)
Automatic Float Drain – 15 to 250 psig (1.0 to 17.2 bar)

**Secondary Pressure Ranges –**
Standard Pressure ..... 2 to 125 psig (0 to 8.6 bar)
Low Pressure ..... 1 to 60 psig (0 to 4.1 bar)
High Pressure ..... 5 to 250 psig (0.4 to 17.2 bar)

**Sump Capacity** ..... 2.8 Ounces

**Weight** ..... 2.5 lb. (1.1 kg)

## Materials of Construction

**Adjusting Stem** ..... Steel

**Body** ..... Zinc

**Bonnet, Internal Parts** ..... Plastic

**Bowls Available –** Transparent ..... Polycarbonate
Metal (With or Without Sight Gauge) ..... Zinc

**Bowl Guard** ..... Steel

**Collar** ..... Plastic or Metal

**Diaphragm** ..... Nitrile

**Drains –** Manual Twist Drain Standard
Body & Nut ..... Plastic

Automatic Float Drain Optional
(Interchangeable for Field Conversions)
Operating Range ..... 10 to 250 psig (.7 to 17.2 bar)
Housing, Float ..... Plastic
Seals ..... Nitrile
Springs, Push Rod ..... Stainless Steel

**Knob** ..... Plastic

**Filter Elements –** 40 Micron (Standard) ..... Plastic

**Seals** ..... Nitrile

**Sight Gauge** ..... Polyamide (Nylon)

**Springs –** Poppet ..... Stainless
Control ..... Steel



**Parker Hannifin Corporation**
Pneumatic Division
Richland, Michigan
www.wattsfluidair.com

# Lubricators

## Lubrication

Many pneumatic system components and most pneumatic tools require oil lubrication for proper operation and long service life. This lubricant is typically carried by the air stream. Too little oil can cause excessive wear and premature failure. Too much oil is wasteful and can become a contaminant, particularly when carried over with the air exhaust. Intermittent lubrication may be the worst situation because the oil film can dry out to form sludges and varnishes on internal surfaces.

Air line lubricators meter oil from a reservoir into the moving air stream. In general terminology, the oil droplets are usually termed a fog. For best results, the lubricator should be located as close as possible to the point where lubrication is required.

## How to Select the Proper Lubricator

Use of proper lubricator can greatly extend the life of expensive downstream pneumatic equipment. Lubricators often are selected according to pipe size. Other selection factors are type of bowl material, bowl size, and refilling system capability. Bowls are available in both polycarbonate and metal. Polycarbonate offers the advantage or transparency, for simplified inspection of oil level and condition. However, caution must be exercised when using polycarbonate bowls in any area where certain chemicals are used. (Please read the warning carefully.)

In addition to choice of bowls, minimum and maximum flow rates and pressure requirements should also be considered. Be sure to check the pressure drop curves, to make certain the selected model will not create a higher pressure drop than the system design can tolerate.

## Lubricator Construction

Bowls are available in polycarbonate and metal, subject to the same constraints discussed in the Filter Section. Transparent polycarbonate simplifies inspection of the oil level and checking for dirt and liquid condensate in the oil. Note that the system must be exhausted before removing the bowl.

In some models, the system must also be exhausted before opening the fill plug to recharge the lubricator. Other designs automatically bypass the air during refilling.

**⚠ Warning**

**The plastic material used to manufacture the plastic bowls, and the sight gauge on metal bowls, may be attacked by certain chemicals. Do not use this lubricator on systems with air supplied by a compressor lubricated with synthetic oils or oils containing phosphate esters or chlorinated hydrocarbons. These oils can carry over into the air lines and chemically attack and possibly rupture the bowl or sight gauge. Also, do not expose the bowl or sight gauge to materials such as carbon tetrachloride, trichlorethylene, acetone, paint thinner, cleaning fluids, or other harmful materials, for they too will cause the plastic to craze and/or rupture. For use in environments where these, or any, chemicals may be present, consult the factory for approval.**

## Lubricator Installation

The lubricators listed in this catalog should be placed before any valving and stay pressurized before, during, and after machine tool cycles. These lubricators should be placed no farther away than 15 feet from the desired point of lubrication.



**Parker Hannifin Corporation**
Pneumatic Division
Richland, Michigan
www.wattsfluidair.com

# Lubricators

## Lubrication Operation

Most lubricator designs include a high-velocity venturi section in the air flow path which creates a low-pressure area to draw oil from the reservoir through a capillary tube to the point of injection. There, the air stream breaks up the oil into droplets.

In a typical lubricator, filtered and regulated air enters the lubricator housing and is channeled in either of two directions depending on flow rate. At low flow rates, all the air passes through the venturi where it mixes with metered oil droplets. Under higher flow conditions, the spring-loaded bypass valve opens and the excess flow bypasses the venturi, then blends with the lubricated air at a downstream point. A manual adjustment (needle valve) in the housing sets the oil drip-rate into the air stream; a sight gauge allows that rate to be monitored. Fill plugs at the lubricator top provide access to refill the reservoir with oil. The bowl is removable for cleaning.

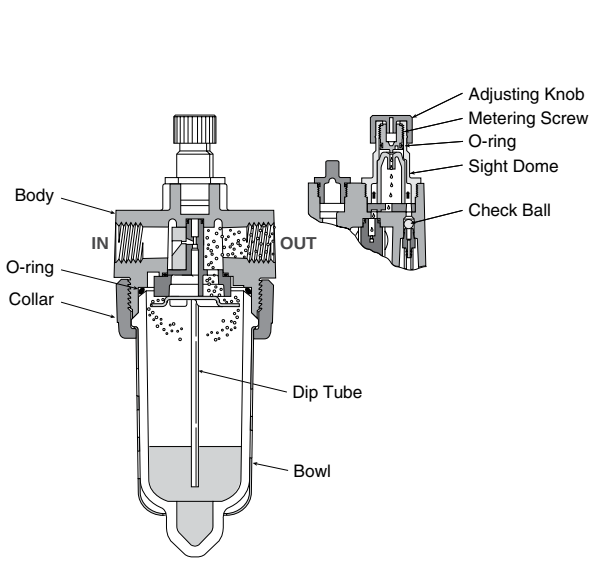


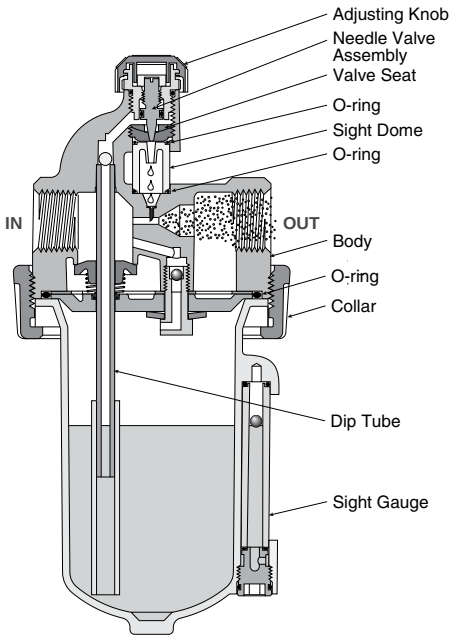




**Parker Hannifin Corporation**
Pneumatic Division
Richland, Michigan
www.wattsfluidair.com

# 04L Mist Lubricators – Miniature

## Features

- Proportional oil delivery over a wide range of air flows
- Precision needle valve assures repeatable oil delivery and provides simple adjustment of delivery rate
- Ideal for low and high flow applications with changing air flow
- Transparent sight dome for 360° visibility
- High flow: 1/8" – 20 SCFM§
  1/4" – 20 SCFM§

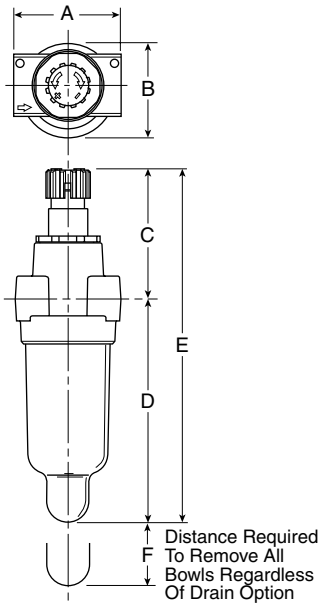


| Port Size | NPT | |
|---|---|---|
| | Twist Drain | No Drain |
| Poly Bowl ‡ | | |
| 1/8" | — | **04L00G*** |
| 1/4" | — | **04L10G*** |
| Metal Bowl without Sight Gauge | | |
| 1/8" | **04L03G*** | — |
| 1/4" | **04L13G*** | — |

**Standard part numbers shown bold.**
**For other models refer to ordering information below.**

‡ For polycarbonate bowl see Caution on inside cover.

§ SCFM = Standard cubic feet per minute at 90 PSIG inlet and 5 PSIG pressure drop.

| 04L Lubricator Dimensions | | |
|---|---|---|
| **A** 1.73 (44) | **B** 1.56 (40) | **C** 2.16 (55) |
| **D** 3.64 (92) | **D**† 3.78 (96) | **E** 5.80 (147) |
| **E**† 5.94 (151) | **F** 1.60 (41) | |

Inches (mm)

† With Twist Drain.

## Ordering Information

| 04L | 1 | 0 | G | * | |
|---|---|---|---|---|---|

**Port Size**
- **0 1/8 Inch**
- **1 1/4 Inch**

**Bowl Options**

| Polycarbonate Bowl | Metal Bowl |
|---|---|
| **0 Without Drain** | **3 Twist Drain** |
| 1 Twist Drain | |

**Body**
- **G Without Tamperproof Cap. No Fill Plug**

**Engineering Change Designator**
- Will be Entered at Factory

**Port Type**
- **Blank NPT**
- 1 BSPP
- 2 BSPT

**BOLD ITEMS ARE MOST POPULAR.**



**Parker Hannifin Corporation**
Pneumatic Division
Richland, Michigan
www.wattsfluidair.com

## Technical Information

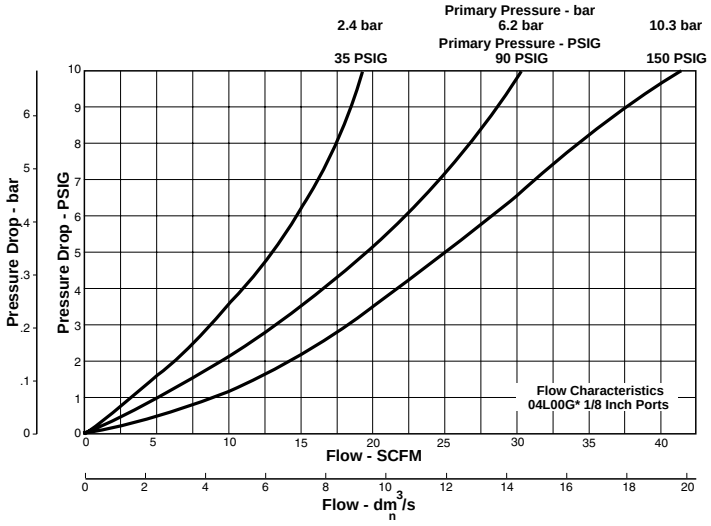


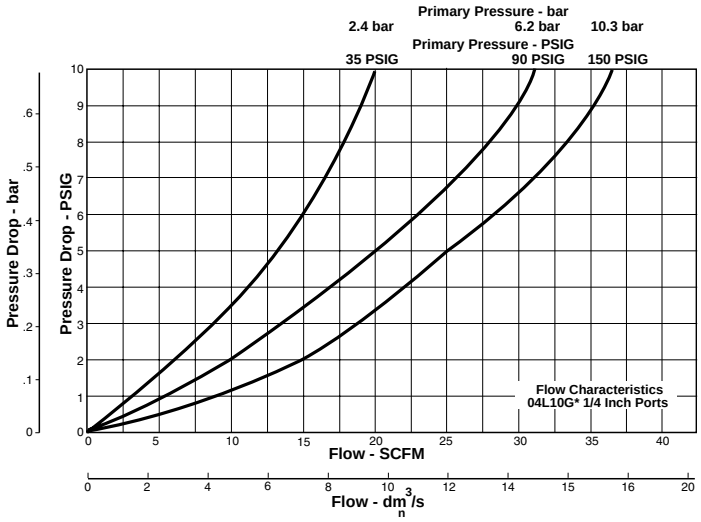


## 04L Mist Lubricator Kits & Accessories

**Bowl Kits –**

Poly Bowl –
No Drain ..... PS421
Twist Drain ..... PS420

Metal Bowl –
Twist Drain (No Sight Gauge) ..... PS447B

**Mounting Bracket Kit** ..... PS419

**Oil –** 1 Gal. ..... F442002
12 Quart Case ..... F442003
4 Gallon Case ..... F442005

## Specifications

**Bowl Capacity** ..... 1 Ounce

**Minimum Flow for Lubrication** ..... 0.5 SCFM at 100 PSIG

**Port Threads** ..... 1/8, 1/4 Inch

**Pressure & Temperature Ratings –**
Polycarbonate Bowl ..... 0 to 150 PSIG (0 to 10.3 bar)
32°F to 125°F (0°C to 52°C)
Metal Bowl ..... 0 to 250 PSIG (0 to 17.2 bar)
32°F to 175°F (0°C to 80°C)

**Suggested Lubricant –** ..... F442 Oil

Petroleum based oil of 100 to 200 SUS viscosity at 100°F and an aniline point greater than 200°F

(DO NOT USE OILS WITH ADDITIVES, COMPOUNDED OILS CONTAINING SOLVENTS, GRAPHITE, DETERGENTS, OR SYNTHETIC OILS.)

**Weight** ..... 0.4 lb. (0.18 kg)

## Materials of Construction

**Body** ..... Zinc

**Bowls –** Transparent ..... Polycarbonate
Metal (Without Sight Gauge) ..... Zinc

**Drains –** Twist – Body & Nut ..... Plastic

**Seals** ..... Nitrile

**Sight Dome** ..... Polycarbonate



**Parker Hannifin Corporation**
Pneumatic Division
Richland, Michigan
www.wattsfluidair.com

# L508 Mist Lubricators – Miniature

## Features

- Proportional oil delivery over a wide range of air flows
- Precision needle valve assures repeatable oil delivery and provides simple adjustment of delivery rate
- Ideal for low and high flow applications with changing air flow
- Polycarbonate sight dome for 360° visibility
- High flow: 1/8" – 20 SCFM§
  1/4" – 20 SCFM§

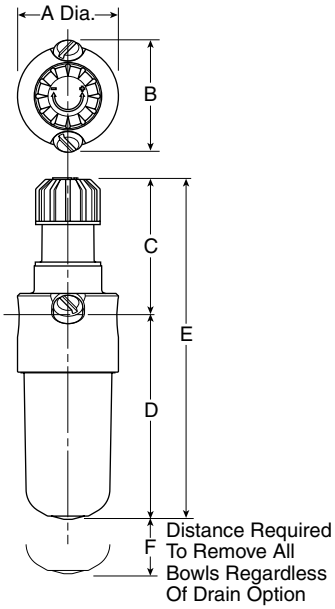


| Port Size | NPT | |
|---|---|---|
| | No Drain | Twist Drain |
| Poly Bowl ‡ | | |
| 1/8" | **L508-01A** | **L508-01AX9** |
| 1/4" | **L508-02A** | **L508-02AX9** |
| Metal Bowl without Sight Gauge | | |
| 1/8" | **L508-01D** | **L508-01DX9** |
| 1/4" | **L508-02D** | **L508-02DX9** |

**Standard part numbers shown bold.**
**For other models refer to ordering information below.**

‡ For polycarbonate bowl see Caution on inside cover.

§ SCFM = Standard cubic feet per minute at 90 PSIG inlet and 5 PSIG pressure drop.

| L508 Lubricator Dimensions | | |
|---|---|---|
| **A** 1.55 (39.2) | **B** 1.74 (44) | **C** 2.21 (56) |
| **D** 3.10 (70.7) | **D†** 3.68 (93.5) | **E** 5.21 (132) |
| **E†** 5.79 (147) | **F** 1.70 (43) | |

Inches (mm)
† With Twist Drain.

## Ordering Information

| L508 | — | 01 | A | | /** |
|---|---|---|---|---|---|

**Port Threads**
- **–** **NPT**
- G BSPP

**Port Size**
- **01 1/8 Inch**
- **02 1/4 Inch**

**Bowl**
- **A Polycarbonate**
- D Metal without Sight Gauge

**Options**
- **Blank NPT**
- X9 Manual Twist Drain
- X67 Mounting Bracket
- X33* Polyurethane Bowl

* Add .65" to overall length.

**Engineering Change Designator**
Will be Entered at Factory

**BOLD ITEMS ARE MOST POPULAR.**



**Parker Hannifin Corporation**
Pneumatic Division
Richland, Michigan
www.wattsfluidair.com

## Technical Information

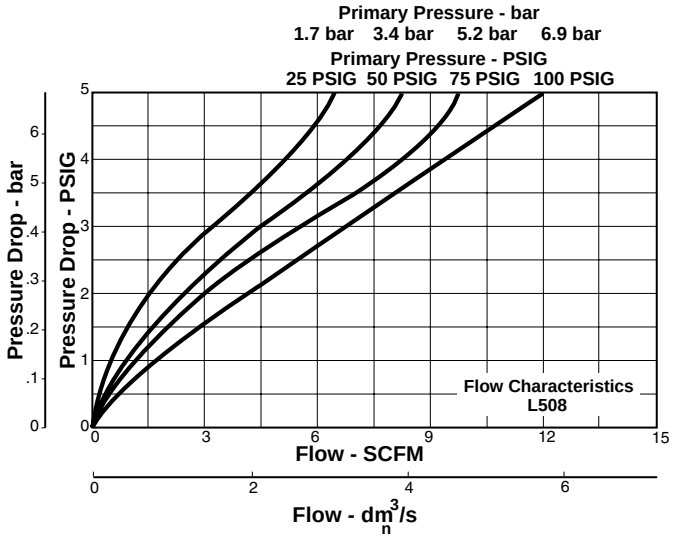


## L508 Mist Lubricator Kits & Accessories

**Bowl Kits –**

Polycarbonate Bowl –
- No Drain ..... BK508Y
- Manual Twist Drain ..... BK504Y

Metal Bowl –
- No Drain ..... BK509Y
- Manual Twist Drain (No Sight Gauge)..... BK505Y

**Mounting Bracket Kit** ..... Must Be Ordered with Lubricator

**Oil –**
- 1 Gal. ..... F442002
- 12 Quart Case ..... F442003
- 4 Gallon Case ..... F442005

## Specifications

**Bowl Capacity** ..... 1 Ounce

**Minimum Flow for Lubrication** ..... 0.5 SCFM at 100 PSIG

**Port Threads** ..... 1/8, 1/4 Inch

**Pressure & Temperature Ratings –**

Polycarbonate Bowl – ..... 0 to 150 PSIG (0 to 10.3 bar)
32°F to 125°F (0°C to 52°C)

Metal Bowl –..... 0 to 300 PSIG (0 to 20.4 bar)
40°F to 150°F (4°C to 65.6°C)

**Suggested Lubricant –** ..... F442 Oil

Petroleum based oil of 100 to 200 SUS viscosity at 100°F and an aniline point greater than 200°F

(DO NOT USE OILS WITH ADDITIVES, COMPOUNDED OILS CONTAINING SOLVENTS, GRAPHITE, DETERGENTS, OR SYNTHETIC OILS.)

**Weight** ..... 0.4 lb. (0.18 kg)

## Materials of Construction

**Body** ..... Aluminum

**Bowls –**
- Polycarbonate ..... Polycarbonate
- Metal (Without Sight Gauge) ..... Zinc

**Drains –**
- Manual Twist..... Brass

**Seals** ..... Nitrile

**Sight Dome** ..... Polyurethane



**Parker Hannifin Corporation**
Pneumatic Division
Richland, Michigan
www.wattsfluidair.com

# L606 Micro-Mist Lubricators – Compact

## Features

- Proportional oil delivery over a wide range of air flows
- Generates oil particles of 5 micron or smaller downstream to lubricate systems having complex piping arrangements
- Precision needle valve assures repeatable oil delivery and provides simple adjustment of delivery rate
- Ideal for low and high flow applications with changing air flow
- Transparent sight dome for 360° visibility.
- Yellow fill cap identifies Micro-Mist Lubricator
- High Flow: 1/4" – 40 SCFM §
  3/8" – 60 SCFM §
  1/2" – 90 SCFM §

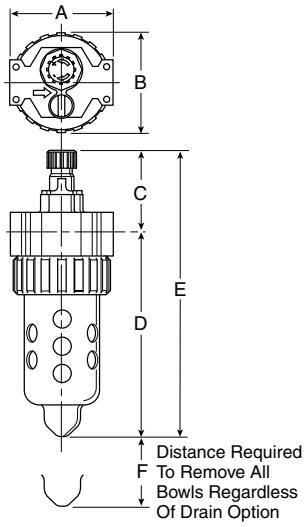


| Port Size | NPT | |
|---|---|---|
| | Twist Drain | No Drain |
| Poly Bowl ‡ / Metal Guard | | |
| 1/4" | — | **L606-022B*** |
| 3/8" | — | **L606-032B*** |
| 1/2" | — | **L606-042B*** |
| Metal Bowl / Sight Gauge | | |
| 1/4" | **L606-024B*** | — |
| 3/8" | **L606-034B*** | — |
| 1/2" | **L606-044B*** | — |

**Standard part numbers shown bold.**
**For other models refer to ordering information below.**

‡ For polycarbonate bowl and sight dome, see Caution on inside cover.

§ SCFM = Standard cubic feet per minute at 90 PSIG inlet and 5 PSIG pressure drop.

| L606 Lubricator Dimensions | | | |
|---|---|---|---|
| **A** | **B** | **C** | **D** |
| 2.81 (71) | 2.74 (70) | 2.24 (57) | 5.58 (142) |
| **D†** | **E** | **E†** | **F** |
| 5.69 (145) | 7.82 (199) | 7.93 (201) | 2.25 (57) |

Inches (mm)

† With Twist Drain.

## Ordering Information

| L606 | — | 02 | 2 | B | * |
|---|---|---|---|---|---|

**Port Threads**
- **– NPT**
- G* BSPP

* 1/4 & 3/8 inch meet ISO 1179-1 Standard.

**Port Size**
- **02 1/4 Inch**
- **03 3/8 Inch**
- **04 1/2 Inch**

**Bowl Options**

| Polycarbonate Bowl | Metal Bowl |
|---|---|
| **2 Metal Bowl Guard / No Drain** | **4 Sight Gauge / Twist Drain** |
| 6 Metal Bowl Guard / Pressure Fill | 8 Sight Gauge / Pressure Fill |

**Options**
- **B With Fill Plug**
- C With Fill Plug/Nylon Sight Dome
- F With Body Pressure Fill
- G With Body Pressure Fill / Nylon Sight Dome

**Engineering Level**
- * Will be Entered at Factory.

**BOLD ITEMS ARE MOST POPULAR.**



**Parker Hannifin Corporation**
Pneumatic Division
Richland, Michigan
www.wattsfluidair.com

## Technical Information

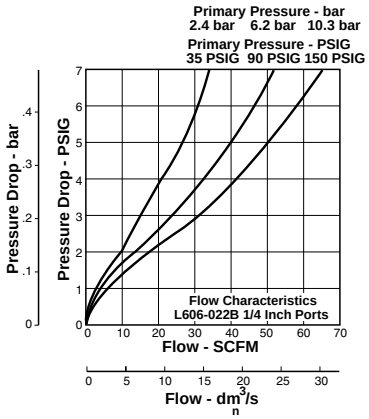


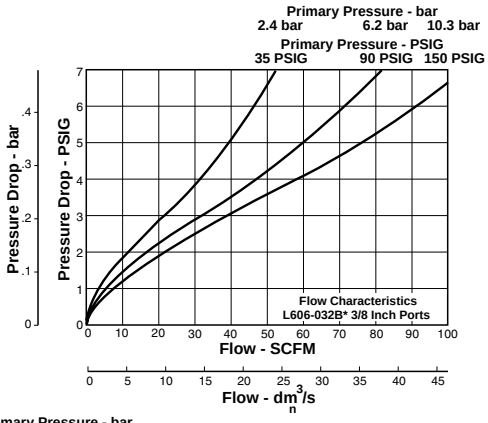


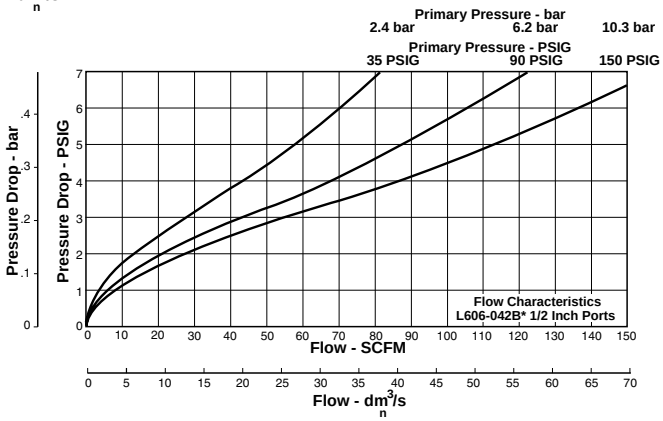


## L606 Micro-Mist Lubricator Kits & Accessories

**Adjustment Knob** ..... P04121
***Adjustment Knob*** *(Old L606)* ..... *606Y72*
**Bowl Guard Kit** ..... PS705
**Bowl Kits –**
Poly Bowl – No Drain ..... PS746
Twist Drain ..... PS717
Pressure Fill ..... PS719
*Plastic Bowl Guard (Old L606)* ..... *BK606Y*
Metal Bowl – Sight Gauge / Twist Drain ..... PS729
Sight Gauge / Pressure Fill ..... PS720
*Zinc with Sight Gauge (Old L606)* ..... *BK605WY*
**Drain Kit – Twist Drain** ..... PS512
**Fill Cap Kit** ..... PS742
**Lubricator Service Kit** ..... PS748
**Mounting Bracket Kit** ..... PS743
***Mounting Bracket Kit*** *(Old L606)* ..... *SAF602-0571*
**Oil –** 1 Gal. ..... F442002
12 Quart Case ..... F442003
4 Gallon Case ..... F442005
**Pressure Fill Adapter Kit** ..... PS716
**Pressure Fill Button** ..... P11912
***Button Head Fill Fitting (M14 Male Thread)*** *(Old L606)* ..... *L606C14*
***Drip Tube Kit*** *(Old L606)* ..... *DTK606*
***Drip Spout Kit*** *(Old L606)* ..... *RK606SY*
**Sight Dome / Fill Cap Kit** ..... PS739
**Nylon Sight Dome Kit** ..... PS740N
***Repair Kits –***
*Needle Valve Assembly (B, W) (Old L606)* ..... *RK606Y*
*Sight Gauge for "W" Bowl (Old L606)* ..... *RKB605WY*

## Specifications

**Bowl Capacity** ..... 2.60 Ounces
**Minimum Flow for Lubrication** ..... 1 SCFM at 100 psig
**Port Threads** ..... 1/4, 3/8, 1/2 Inch
**Pressure & Temperature Rating –**
Polycarbonate Bowl – 0 to 150 psig (0 to 10.3 bar)
32°F to 125°F (0°C to 52°C)
Metal Bowl – 0 to 250 psig (0 to 17.2 bar)
32°F to 175°F (0°C to 80°C)
**Suggested Lubricant** ..... F442 Oil
Petroleum based oil of 100 to 200 SSU viscosity at 100°F (38°C) and an aniline point greater than 200°F (93°C)
(DO NOT USE OILS WITH ADDITIVES, COMPOUNDED OILS CONTAINING SOLVENTS, GRAPHITE, DETERGENTS, OR SYNTHETIC OILS.)
**Weight** ..... 1.2 lb. (.5 kg)

## Materials of Construction

**Body** ..... Zinc
**Bowls –** Transparent ..... Polycarbonate
Metal (With Sight Gauge) ..... Zinc
**Bowl Guard** ..... Steel
**Collar** ..... Plastic
**Drain – Twist – Body & Nut** ..... Plastic
**Injector Meter Block & Base Assembly** ..... Plastic
**Seals** ..... Nitrile
**Sight Dome** ..... Polyamide (Nylon)
**Sight Gauge** ..... Polyamide (Nylon)



**Parker Hannifin Corporation**
Pneumatic Division
Richland, Michigan
www.wattsfluidair.com

# L606 Micro-Mist Lubricators – Standard

## Features

- Proportional oil delivery over a wide range of air flows
- Generates oil particles of 5 micron or smaller downstream to lubricate systems having complex piping arrangements
- Precision needle valve assures repeatable oil delivery and provides simple adjustment of delivery rate
- Ideal for low and high flow applications with changing air flow
- Transparent sight dome for 360° visibility
- Yellow fill cap identifies micro-mist lubricator
- High flow: 3/4" – 90 SCFM§

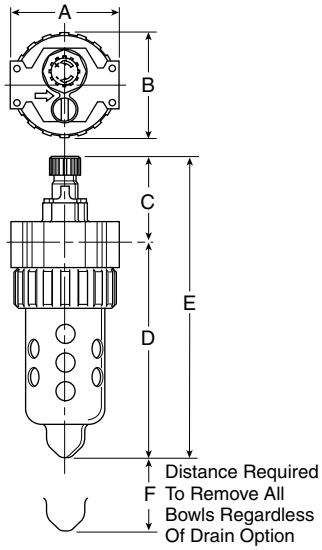


| Port Size | NPT | |
|---|---|---|
| | Twist Drain | No Drain |
| Poly Bowl ‡ / Metal Guard | | |
| 3/4" | — | **L606-062B*** |
| Metal Bowl / Sight Gauge | | |
| 3/4" | **L606-064B*** | — |

**Standard part numbers shown bold.**
**For other models refer to ordering information below.**
‡ For polycarbonate bowl and sight dome, see Caution on inside cover.
§ SCFM = Standard cubic feet per minute at 90 psig inlet and 5 psig pressure drop.

| L606 Lubricator Dimensions | | | |
|---|---|---|---|
| **A** | **B** | **C** | **D** |
| 3.24 (82) | 3.25 (83) | 2.41 (61) | 6.86 (174) |
| **D†** | **E** | **E†** | **F** |
| 6.95 (177) | 9.09 (231) | 9.35 (237) | 2.75 (70) |

Inches (mm)
† With Twist Drain.

## Ordering Information

| L606 | — | 06 | 2 | B | * |
|---|---|---|---|---|---|

**Port Threads**
- **– NPT**
- G BSPP

**Port Size**
- **06 3/4 Inch**

**Bowl Options**

| Polycarbonate Bowl | Metal Bowl |
|---|---|
| **2 Metal Bowl Guard / No Drain** | **4 Sight Gauge / Twist Drain** |
| 6 Metal Bowl Guard / Pressure Fill | 8 Sight Gauge / Pressure Fill |

**Options**
- **B With Fill Plug**
- C With Fill Plug/Nylon Sight Dome
- F With Body Pressure Fill
- G With Body Pressure Fill / Nylon Sight Dome

**Engineering Level**
- * Will be Entered at Factory.

**BOLD ITEMS ARE MOST POPULAR.**



**Parker Hannifin Corporation**
Pneumatic Division
Richland, Michigan
www.wattsfluidair.com

## Technical Information

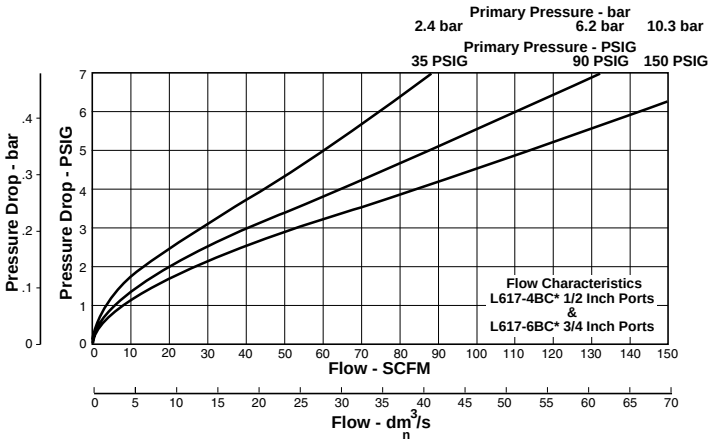


## L606 Micro-Mist Lubricator Kits & Accessories

**Adjustment Knob** ..... P04121

***Adjustment Knob*** *(Old L606)* ..... *606Y72*

**Bowl Guard Kit** ..... PS805P

**Bowl Kits –**

Poly Bowl – No Drain ..... PS846
Twist Drain ..... PS817
Pressure Fill ..... PS819
Remote Fill ..... PS828
*Plastic Bowl Guard (Old L606)* ..... *BK606A*

Metal Bowl – Sight Gauge / Twist Drain ..... PS829
Sight Gauge / Pressure Fill ..... PS820
*Zinc with Sight Gauge (Old L606)* ..... *BK605WA*
*Aluminum (E) (Old L606)* ..... *BK603A*
*Aluminum with Sight Gauge (G) (Old L606)* ..... *BK606X30A*

**Drain Kit** – Twist Drain ..... PS512

**Fill Cap Kit** ..... PS742

**Lubricator Service Kit** ..... PS748

**Mounting Bracket Kit** ..... PS843

***Mounting Bracket Kit*** *(Old L606)* ..... *SAF602-0572*

**Oil –** 1 Gal. ..... F442002
12 Quart Case ..... F442003
4 Gallon Case ..... F442005

**Pressure Fill Adapter Kit** ..... PS716

**Pressure Fill Button** ..... P11912

***Button Head Fill Fitting*** *(M14 Male Thread) (Old L606)* ..... *L606C14*

***Drip Tube Kit*** *(Old L606)* ..... *DTK606*

***Drip Spout Kit*** *(Old L606)* ..... *RK606SY*

**Remote Auto-Fill Device** ..... PS505C

**Sight Dome / Fill Cap Kit** ..... PS739

**Sight Dome Kit** ..... PS740

**Nylon Sight Dome Kit** ..... PS740N

**Repair Kits –**
*Adjusting Knob (Old L606)* ..... *606Y72*
*Needle Valve Assembly (B, W) (Old L606)* ..... *RK606Y*
*Sight Gauge for "W" Bowl (Old L606)* ..... *RKB605WY*
*Sight Gauge for "G" Bowl (Old L606)* ..... *RKB606X30A*

## Specifications

**Bowl Capacity** ..... 4.9 Ounces

**Minimum Flow for Lubrication** ..... 1 SCFM at 100 PSIG

**Port Threads** ..... 1/2, 3/4 Inch

**Pressure & Temperature Rating –**
Polycarbonate Bowl – 0 to 150 psig (0 to 10.3 bar)
32°F to 125°F (0°C to 52°C)

Metal Bowl – 0 to 250 psig (0 to 17.2 bar)
32°F to 175°F (0°C to 80°C)

**Suggested Lubricant** ..... F442 Oil

Petroleum based oil of 100 to 200 SSU viscosity at 100°F (38°C) and an aniline point greater than 200°F (93°C)

(DO NOT USE OILS WITH ADDITIVES, COMPOUNDED OILS CONTAINING SOLVENTS, GRAPHITE, DETERGENTS, OR SYNTHETIC OILS.)

**Weight** ..... 1.9 lb. (.9 kg)

## Materials of Construction

**Body** ..... Zinc

**Bowls –** Transparent ..... Polycarbonate
Metal (With Sight Gauge) ..... Zinc

**Bowl Guard** ..... Steel

**Collar** ..... Plastic or Metal

**Drain –** Twist – Body & Nut ..... Plastic

**Injector Meter Block & Base Assembly** ..... Plastic

**Seals** ..... Nitrile

**Sight Dome** ..... Polycarbonate

**Sight Gauge** ..... Polyamide (Nylon)



**Parker Hannifin Corporation**
Pneumatic Division
Richland, Michigan
www.wattsfluidair.com

# L606 Mist Lubricators – Standard

## Features

- Metal bowl with sight gauge - standard
- Polycarbonate sight dome
- Bowl can be filled while air line is under pressure
- Proportional oil delivery over a wide range of air flows
- Large capacity bowl
- Optional high capacity bowl(s) available
- Precision needle valve assures repeatable oil delivery and provides simple adjustment of delivery rate
- Automatic fill optional (requires external pressurized oil supply)
- High flow: 3/4" – 325 SCFM§
  1" – 350 SCFM§

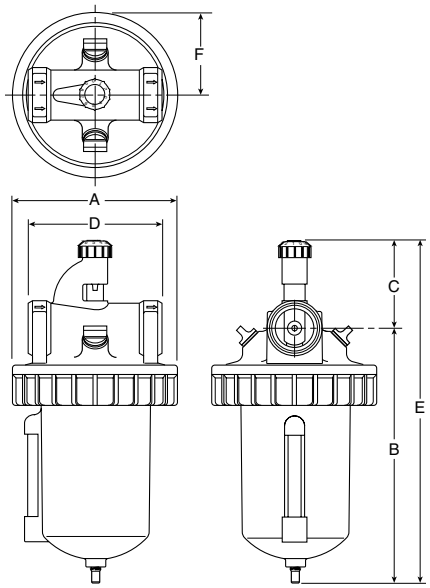


| Port Size | NPT<br>No Drain |
|---|---|
| **Metal Bowl / Sight Gauge** | |
| 3/4" | **L606-06W** |
| 1" | **L606-08W** |
| Metal Bowl 32 oz. without Sight Gauge | |
| 3/4" | **L606-06E** |
| 1" | **L606-08E** |
| Metal Bowl 64 oz. with Sight Gauge | |
| 3/4" | **L606-06G** |
| 1" | **L606-08G** |

**Standard part numbers shown bold.**
**For other models refer to ordering information below.**

§ SCFM = Standard cubic feet per minute at 90 PSIG inlet and 5 PSIG pressure drop.

| L606 Lubricator Dimensions | | | | | |
|---|---|---|---|---|---|
| **A** | **B** | **C** | **D** | **E** | **F** |
| **L606-06W, L606-08W** | | | | | |
| 4.97 (126) | 7.25 (184) | 2.63 (67) | 4.06 (103) | 9.88 (251) | 2.48 (63) |
| **L606-06E, L606-08E** | | | | | |
| 4.97 (126) | 10.75 (273) | 2.63 (67) | 4.06 (103) | 13.38 (340) | 2.48 (63) |
| **L606-06G, L606-08G** | | | | | |
| 5.00 (127) | 9.40 (239) | 2.62 (66) | 4.06 (103) | 12.02 (305) | 2.50 (64) |

inches (mm)

## Ordering Information

| L606 | — | 06 | W | | /** |
|---|---|---|---|---|---|

**Port Threads**
- **– NPT**
- G BSPP

**Port Size**
- **06 3/4 Inch**
- **08 1 Inch**

**Bowl**
- **E 32 oz. Large Capacity without Sight Gauge**
- G 64 oz. Large Capacity with Sight Gauge
- **W 16 oz. Metal with Sight Gauge**

**Options**
- **Blank None**
- H Button Head Fill Fitting

**Engineering Level**
- * Will be Entered at Factory.

**BOLD ITEMS ARE MOST POPULAR.**



**Parker Hannifin Corporation**
Pneumatic Division
Richland, Michigan
www.wattsfluidair.com

## Technical Information

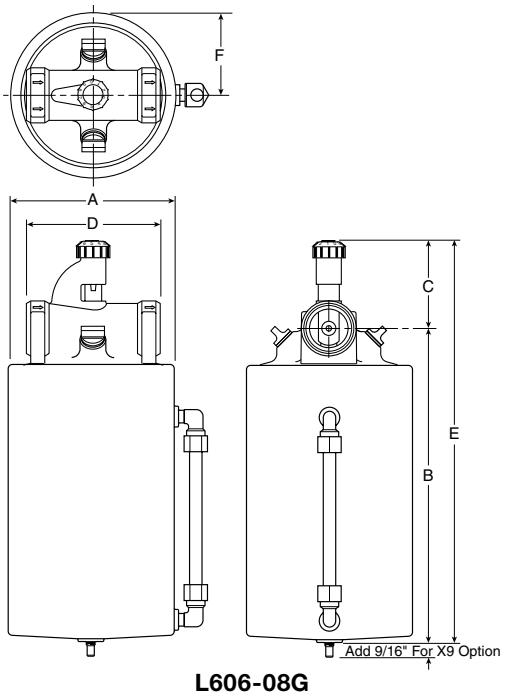


**L606-08G**

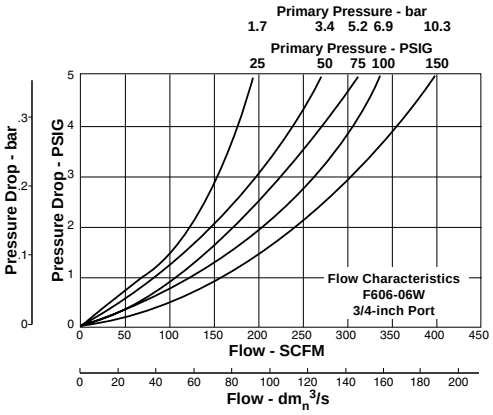


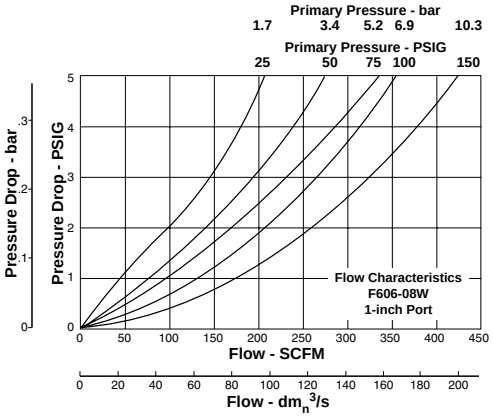


## L606 Lubricator Kits & Accessories

**Adjusting Knob** ..... 606Y72

**Bowl Kits –**
Aluminum (E) ..... BK603B
Aluminum with Sight Gauge (G) ..... BK606X30B
Zinc with Sight Gauge (W) ..... BK609WB

**Button Head Fill Fitting** (M14 male thread) ..... L606C14

**Dip Tube Kit** ..... DTK606

**Drip Spout Kit** ..... RK606SY

**Mounting Bracket –**
3/4 Inch units (2 required per unit) ..... SA200AW57
1 Inch units (2 required per unit) ..... SA200CW57

**Oil –** 1 Gal. ..... F442002
12 Quart Case ..... F442003
4 Gallon Case ..... F442005

**Repair Kits –** Needle Valve Assembly (All) ..... RK606Y
Sight Gauge Repair Kit (W) ..... RKB605WB
Sight Gauge Repair Kit (G) ..... RKB606X30B
FIll Plug Replacement ..... SAP04113

## Specifications

**Bowl Capacity –**
Aluminum (E) ..... 32 Ounces
Aluminum with Polycarbonate Sight Gauge (G) ..... 64 Ounces
Zinc with Nylon Sight Gauge (W) ..... 16 Ounces

**Port Threads** ..... 3/4, 1 Inch

**Pressure & Temperature Ratings –**
Aluminum Bowl (E) ..... 0 to 300 PSIG (0 to 20.4 bar)
40°F to 150°F (4.4°C to 65.6°C)
Aluminum Bowl with
Polycarbonate Sight Gauge (G) ..... 0 to 150 PSIG (0 to 10.2 bar)
40°F to 125°F (4.4°C to 52°C)
Zinc Bowl with
Nylon Sight Gauge (W) ..... 0 to 250 PSIG (0 to 17.2 bar)
40°F to 150°F (4.4°C to 65.6°C)

**Suggested Lubricant** ..... F442 Oil
Petroleum based oil of 100 to 200 SSU viscosity at 100°F and an aniline point greater than 200°F.

(DO NOT USE OILS WITH ADDITIVES, COMPOUNDED OILS CONTAINING SOLVENTS, GRAPHITE, DETERGENTS, OR SYNTHETIC OILS.)

**Weight –**
Aluminum Bowl (E) ..... 5.5 lb. (2.49 kg) / Unit
22.3 lb. (10.12 kg) / 4-Unit Master Pack
Aluminum Bowl with
Polycarbonate Sight Gauge (G) ..... 7.2 lb. (3.27 kg) / Unit
28.8 lb. (13.06 kg) / 4-Unit Master Pack
Zinc Bowl with
Nylon Sight Gauge (W) ..... 4.2 lb. (1.91 kg) / Unit
16.6 lb. (7.53 kg) / 4-Unit Master Pack

## Materials of Construction

**Body** ..... Zinc

**Bowls –** (E) ..... Aluminum
(G) ..... Aluminum with Polycarbonate Sight Gauge
(W) ..... Zinc with Nylon Sight Gauge

**Seals** ..... Buna N



**Parker Hannifin Corporation**
Pneumatic Division
Richland, Michigan
www.wattsfluidair.com

# L606 Mist Lubricators – Standard

## Features

- Metal bowl with sight gauge - standard
- Polycarbonate sight dome
- Bowl can be filled while air line is under pressure
- Proportional oil delivery over a wide range of air flows
- Large capacity bowl
- Optional high capacity bowl(s) available
- Precision needle valve assures repeatable oil delivery and provides simple adjustment of delivery rate
- Automatic fill optional (requires external pressurized oil supply)
- High flow: 1-1/4" – 325 SCFM§
  1-1/2" – 400 SCFM§

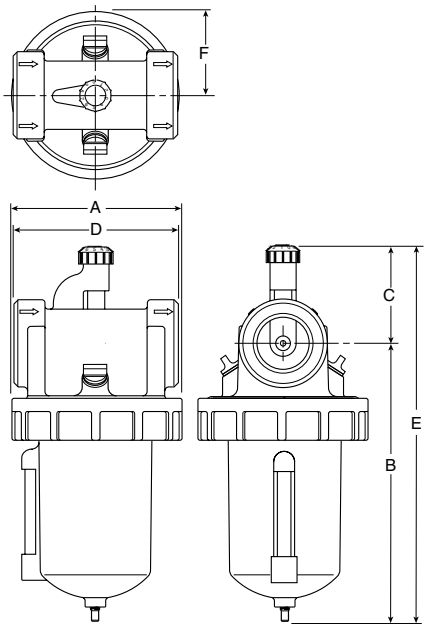


**L606-10W12W & L606-10E12E**

| Port Size | NPT No Drain |
|---|---|
| Metal Bowl / Sight Gauge | |
| 1-1/4" | **L606-10W** |
| 1-1/2" | **L606-12W** |
| Metal Bowl 32 oz. without Sight Gauge | |
| 1-1/4" | **L606-10E** |
| 1-1/2" | **L606-12E** |
| Metal Bowl 64 oz. with Sight Gauge | |
| 1-1/4" | **L606-10G** |
| 1-1/2" | **L606-12G** |

§ SCFM = Standard cubic feet per minute at 90 PSIG inlet and 5 PSIG pressure drop.

| L606 Lubricator Dimensions | | | | | |
|---|---|---|---|---|---|
| A | B | C | D | E | F |
| **L606-10W, L606-12W** | | | | | |
| 4.97 (126) | 7.63 (194) | 2.84 (72) | 4.81 (122) | 10.47 (266) | 2.48 (63) |
| **L606-10E, L606-12E** | | | | | |
| 4.97 (126) | 11.13 (283) | 2.84 (72) | 4.81 (122) | 13.97 (355) | 2.48 (63) |
| **L606-10G, L606-12G** | | | | | |
| 5.00 (127) | 7.99 (203) | 2.84 (72) | 4.81 (122) | 12.80 (325) | 2.50 (64) |

inches (mm)

## Ordering Information

| L606 | — | 10 | W | | /** |
|---|---|---|---|---|---|

**Port Threads**
- **– NPT**
- G BSPP

**Port Size**
- **10 1-1/4 Inch**
- **12 1-1/2 Inch**

**Bowl**
- **E 32 oz. Large Capacity without Sight Gauge**
- G 64 oz. Large Capacity with Sight Gauge
- **W 16 oz. Metal with Sight Gauge**

**Options**
- **Blank None**
- H Button Head Fill Fitting

**Engineering Level**
- * Will be Entered at Factory

**BOLD ITEMS ARE MOST POPULAR.**



**Parker Hannifin Corporation**
Pneumatic Division
Richland, Michigan
www.wattsfluidair.com

## Technical Information

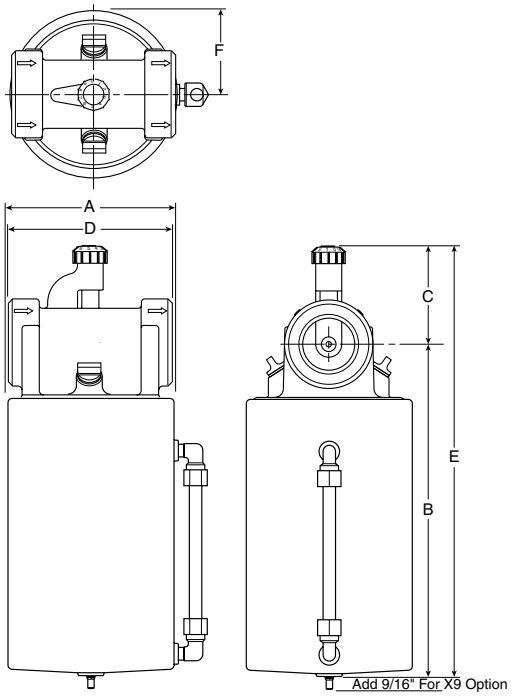


**L606-12G**

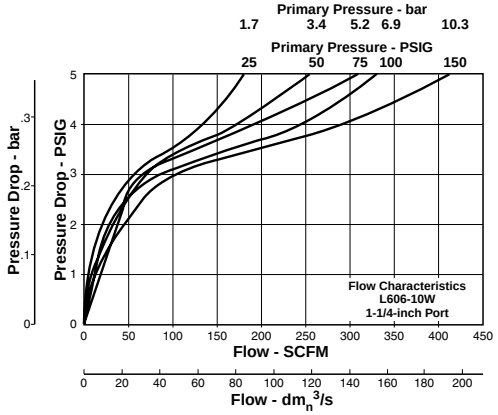


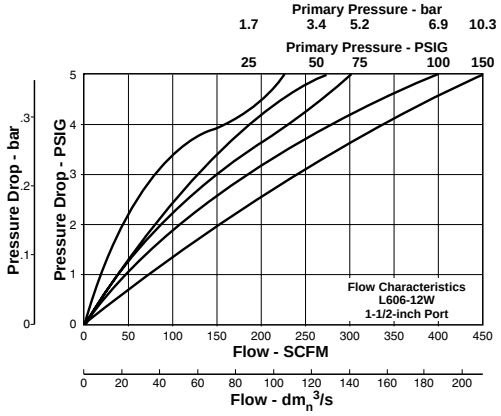


## L606 Lubricator Kits & Accessories

**Adjusting Knob** ..... 606Y72

**Bowl Kits –**
Aluminum (E) ..... BK603B
Aluminum with Sight Gauge (G) ..... BK606X30B
Zinc with Sight Gauge (W) ..... BK609WB

**Button Head Fill Fitting** (M14 male thread) ..... L606C14

**Dip Tube Kit** ..... DTK606

**Drip Spout Kit** ..... RK606SY

**Oil –** 1 Gal. ..... F442002
12 Quart Case ..... F442003
4 Gallon Case ..... F442005

**Repair Kits –** Needle Valve Assembly (All) ..... RK606Y
Sight Gauge Repair Kit (W) ..... RKB605WB
Sight Gauge Repair Kit (G) ..... RKB606X30B
FIll Plug Replacement ..... SAP04113

## Specifications

**Bowl Capacity –**
Aluminum (E) ..... 32 Ounces
Aluminum with Polycarbonate Sight Gauge (G) ..... 64 Ounces
Zinc with Nylon Sight Gauge (W) ..... 16 Ounces

**Port Threads** ..... 1-1/4, 1-1/2 Inch

**Pressure & Temperature Ratings –**
Aluminum Bowl (E) ..... 0 to 300 PSIG (0 to 20.4 bar)
40°F to 150°F (4.4°C to 65.6°C)
Aluminum Bowl with
Polycarbonate Sight Gauge (G) ..... 0 to 150 PSIG (0 to 10.2 bar)
40°F to 125°F (4.4°C to 52°C)
Zinc Bowl with
Nylon Sight Gauge (W) ..... 0 to 250 PSIG (0 to 17.2 bar)
40°F to 150°F (4.4°C to 65.6°C)

**Suggested Lubricant** ..... F442 Oil

Petroleum based oil of 100 to 200 SSU viscosity at 100°F and an aniline point greater than 200°F.

(DO NOT USE OILS WITH ADDITIVES, COMPOUNDED OILS CONTAINING SOLVENTS, GRAPHITE, DETERGENTS, OR SYNTHETIC OILS.)

**Weight –**
Aluminum Bowl (E) ..... 8.3 lb. (3.76 kg) / Unit
33.2 lb. (15.06 kg) / 4-Unit Master Pack
Aluminum Bowl with
Polycarbonate Sight Gauge (G) ..... 10 lb. (4.54 kg) / Unit
40 lb. (18.14 kg) / 4-Unit Master Pack
Zinc Bowl with
Nylon Sight Gauge (W) ..... 7.5 lb. (3.40 kg) / Unit
28.2 lb. (12.79 kg) / 4-Unit Master Pack

## Materials of Construction

**Body** ..... Zinc

**Bowls –** (E) ..... Aluminum
(G) ..... Aluminum with Polycarbonate Sight Gauge
(W) ..... Zinc with Nylon Sight Gauge

**Seals** ..... Buna N



**Parker Hannifin Corporation**
Pneumatic Division
Richland, Michigan
www.wattsfluidair.com

# 09L Mist Lubricators – Hi-Flow

## Features

- Metal bowl with sight gauge and manual drain – standard
- Transparent sight dome for 360° visibility
- Bowl can be filled while air line is under pressure
- Proportional oil delivery over a wide range of air flows
- High flow: 1000 – SCFM§

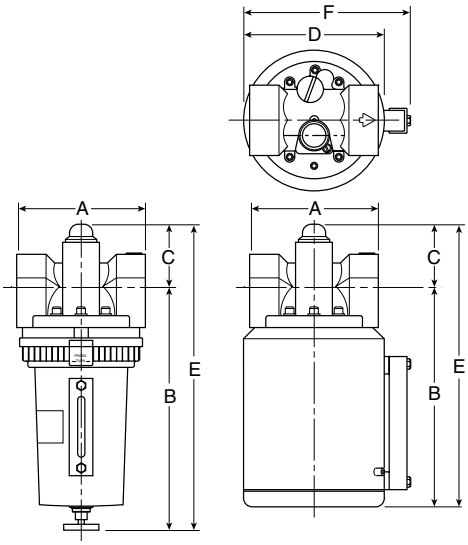


**1 Qt.** **3 Qt.**

| Port Size | NPT |
|---|---|
| Metal Bowl / Sight Gauge – 1 Quart | |
| 2" | **09L84BA** |
| Metal Bowl / Sight Gauge – 3 Quart | |
| 2" | **09L8PBA** |

**Standard part numbers shown bold.**
**For other models refer to ordering information below.**

§ SCFM = Standard Cubic Feet Per Minute at 900 PSIG Inlet, and 5 PSIG Pressure Drop.

| 09L Lubricator Dimensions | | | | | | |
|---|---|---|---|---|---|---|
| **1 Qt.** | **A** 5.50 (140) | **B** 10.40 (264) | **C** 2.64 (67) | **D** — | **E** 13.04 (331) | **F** — |
| **3 Qt.** | **A** 5.50 (140) | **B** 9.44 (240) | **C** 2.64 (67) | **D** 6.00 (152) | **E** 12.08 (307) | **E** 7.12 (181) |

Inches (mm)

## Ordering Information

| 09L | 8 | 4 | B | * | |
|---|---|---|---|---|---|

**Port Size**
- **8 2 Inch**

**Bowl Options**
- **Metal Bowl**
- **4 1 Quart Sight Gauge / Manual Drain**
- P 3 Quart Sight Gauge / Manual Drain

**Options**
- **B Without Tamperproof Cap**

**Engineering Level**
- * Will be Entered at Factory

**Port Type**
- **Blank NPT**

**BOLD ITEMS ARE MOST POPULAR.**



**Parker Hannifin Corporation**
Pneumatic Division
Richland, Michigan
www.wattsfluidair.com

## Technical Information

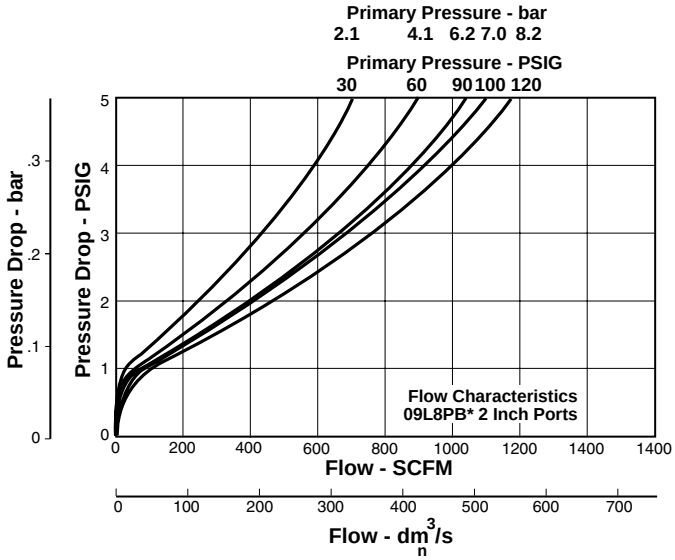


## 09L Lubricator Kits & Accessories

**Fill Cap Kit** ..... PS610

**Lubricator Service Kit** ..... PS607

**Metal Bowl –** Sight Gauge / Twist Drain ..... PS612*

**Oil –** 1 Gal. ..... F442002
12 Quart Case ..... F442003
4 Gallon Case ..... F442005

**Sight Dome Kit** ..... PS613

* 1 Quart Bowl

## Specifications

**Bowl Capacity** ..... 1 Qt. (Standard)
3 Qt. (Optional)

**Bowl** ..... Metal with Sight Gauge

**Drain** ..... Manual Twist Drain

**Port Threads** ..... 2 Inch

**Pressure & Temperature Rating** ..... 0 to 150 PSIG (0 to 10.3 bar)
32°F to 150°F (0°C to 66°C)

**Suggested Lubricant** ..... F442 Oil

Petroleum based oil of 100 to 200 SSU viscosity
at 100°F and an aniline point greater than 200°F

(DO NOT USE OILS WITH ADDITIVES,
COMPOUNDED OILS CONTAINING SOLVENTS,
GRAPHITE, DETERGENTS, OR SYNTHETIC OILS.)

**Weight** – 1 Qt. ..... 10.2 lb. (4.6 kg)
3 Qt. ..... 13.7 lb. (6.2 kg)

## Materials of Construction

**Body** ..... Zinc Alloy, Die Cast



**Parker Hannifin Corporation**
Pneumatic Division
Richland, Michigan
www.wattsfluidair.com

# Close Nippled Combinations – 14 Miniature Series

- See individual component pages for details.

## Two-Unit Combo

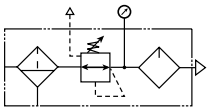

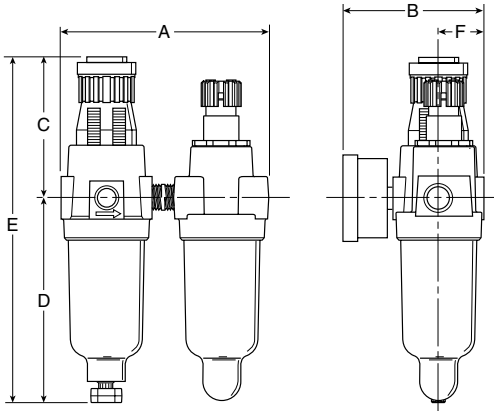


| Series | Port | Model Numbers |
|---|---|---|
| 14G | 1/8" | **14G01B13F0G*** |
| | 1/4" | **14G11B13F0G*** |

**For other models, refer to ordering information on next page.**
For polycarbonate bowl see Caution on inside cover.

| A | B | C | D | E | F |
|---|---|---|---|---|---|
| 3.75 (95) | 3.79 (96) | 2.42 (61) | 2.04 (52) | 6.21 (158) | .79 (20) |

Inches (mm)
Note: All dimensions nominal.

## Three-Unit Combo

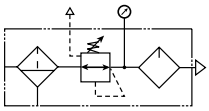

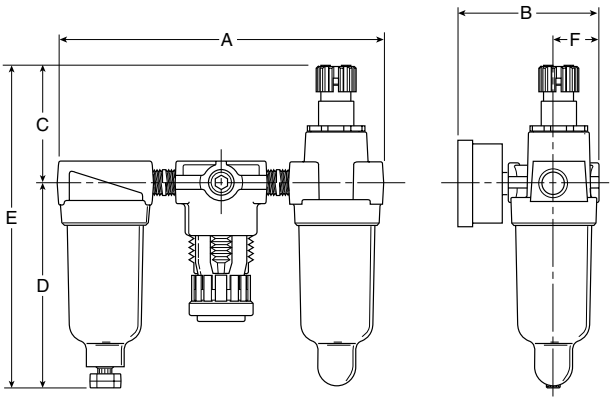


| Series | Port | Model Numbers |
|---|---|---|
| 14A | 1/8" | **14A01B13F0G*** |
| | 1/4" | **14A11B13F0G*** |

**For other models, refer to ordering information on next page.**
For polycarbonate bowl see Caution on inside cover.

| A | B | C | D | E | F |
|---|---|---|---|---|---|
| 5.77 (147) | 3.82 (97) | 2.16 (55) | 2.04 (52) | 5.98 (152) | .79 (20) |

Inches (mm)
Note: All dimensions nominal.

**BOLD ITEMS ARE MOST POPULAR.**



**Parker Hannifin Corporation**
Pneumatic Division
Richland, Michigan
www.wattsfluidair.com

# Close Nippled Combinations – 14 Miniature Series

## Ordering Information

| 14A | 1 | 1 | B | 13 | F | 0 | G | * |
|---|---|---|---|---|---|---|---|---|

**Combo Type**
- **14A 3-Unit**
- **14G 2-Unit**

**Port Size**
- **0 1/8"**
- **1 1/4"**

**Filter Bowl Options**
- Poly Bowl
- **1 Manual Twist Drain**
- 5 Automatic Pulse Drain
- Metal Bowl
- 3 Manual Twist Drain
- 7 Automatic Pulse Drain

**Filter Element**
- A 40 Micron
- **B 5 Micron**

**Regulator Pressure**
- Without Gauge
- 10 30 PSIG
- 11 60 PSIG
- 12 15 PSIG
- **13 125 PSIG**
- With Gauge
- 15 30 PSIG
- 16 60 PSIG
- 17 15 PSIG
- 18 125 PSIG

**Relief**
- **F Relieving**
- G Non-Relieving

**Lubricator Bowl Options**
- Poly Bowl
- **0 No Drain**
- 1 Manual Twist Drain
- Metal Bowl
- 3 Manual Twist Drain

**Lubricator Body Options**
- **G No Fill Plug**

**Engineering Change Designator**
- Will be entered at factory.

**⚠ WARNING**

**Product rupture can cause serious injury.**
**Do not connect regulator to bottled gas.**
**Do not exceed maximum primary pressure rating.**

**⚠ CAUTION:**

**REGULATOR PRESSURE ADJUSTMENT –** The working range of knob adjustment is designed to permit outlet pressures within their full range. Pressure adjustment beyond this range is also possible because the knob is not a limiting device. This is a common characteristic of most industrial regulators, and limiting devices may be obtained only by special design.
For best performance, regulated pressure should always be set by increasing the pressure up to the desired setting.

## Mounting Bracket Kits

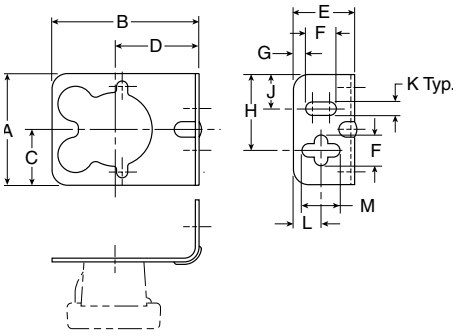


**PS417B**
(Includes Panel Mount Nut)

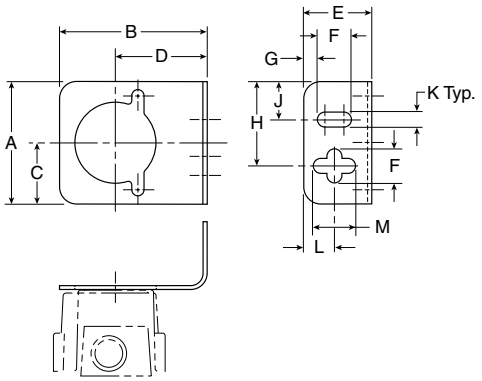


**PS419**

## Dimensions

| A | B | C | D | E | F | G | H | J | K | L | M | Kit |
|---|---|---|---|---|---|---|---|---|---|---|---|---|
| 1.80 (46) | 2.37 (60) | .90 (23) | 1.35 (34) | 1.00 (25) | .50 (13) | .20 (5) | 1.24 (31) | .56 (14) | .22 (6) | .45 (11) | .62 (16) | **PS417B** (14F, 10F, 14R, 14E) |
| 1.80 (46) | 2.17 (55) | .90 (23) | 1.35 (34) | 1.00 (25) | .50 (13) | .20 (5) | 1.24 (31) | .56 (14) | .22 (6) | .45 (11) | .62 (16) | **PS419** (04L) |

Inches (mm)
Note: All dimensions nominal.



**Parker Hannifin Corporation**
Pneumatic Division
Richland, Michigan
www.wattsfluidair.com

# Close Nippled Combinations – C528 Miniature Series

- See individual component pages for details.

## Two-Unit Combo

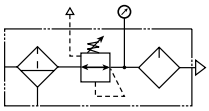

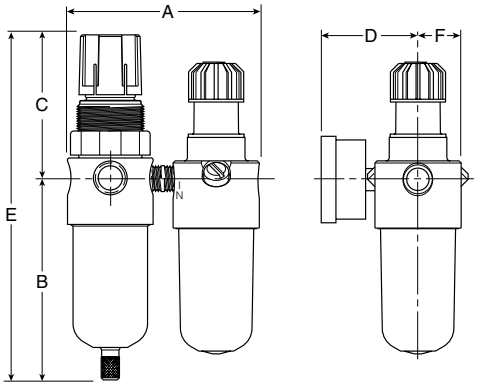


| Series | Port | Model Numbers |
|---|---|---|
| C528BL | 1/8", 1/4" | **C528**BLAHCA** |
| | 1/8", 1/4" | **C528**BLDHCD** |

**** Port Size 01 = 1/8", 02 = 1/4".**
**For other models, refer to ordering information on next page.**
For polycarbonate bowl see Caution on inside cover.

| A | B | C | D | E | F |
|---|---|---|---|---|---|
| 3.50 (89) | 3.50 (89) | 2.38 (60) | 1.98 (50) | 5.88 (149) | .77 (20) |

Inches (mm)
Note: All dimensions nominal.

## Three-Unit Combo

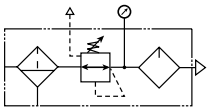

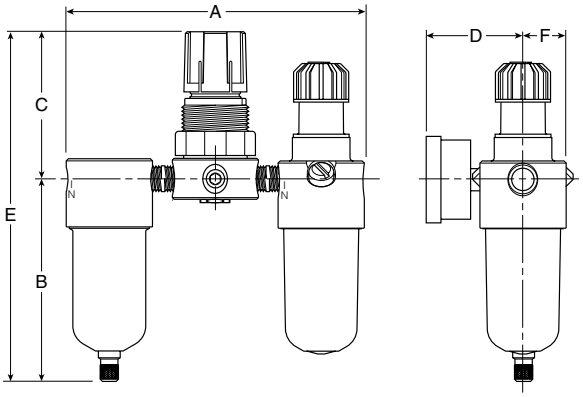


| Series | Port | Model Numbers |
|---|---|---|
| C528FRL | 1/8", 1/4" | **C528**FRLAHCA** |
| | 1/8", 1/4" | **C528**FRLDHCD** |

**** Port Size 01 = 1/8", 02 = 1/4".**
**For other models, refer to ordering information on next page.**
For polycarbonate bowl see Caution on inside cover.

| A | B | C | D | E | F |
|---|---|---|---|---|---|
| 5.13 (130) | 3.50 (89) | 1.63 (41) | 1.98 (50) | 5.13 (130) | .77 (20) |

Inches (mm)
Note: All dimensions nominal.

**BOLD ITEMS ARE MOST POPULAR.**



**Parker Hannifin Corporation**
Pneumatic Division
Richland, Michigan
www.wattsfluidair.com

# Close Nippled Combinations – C528 Miniature Series

## Ordering Information

| C528 | 01 | BL | A | H | C | A |
|---|---|---|---|---|---|---|

**Port Size**
- 01 1/8"
- 02 1/4"

**Combo Type**
- BL 2-Unit
- FRL 3-Unit

**Filter Bowl Options**
- A Polycarbonate
- D Zinc

**Filter Element**
- G 5 Micron
- H 20 Micron

**Reduced Pressure Range**
- A 0 - 25 PSIG
- B 0 - 60 PSIG
- C 0 - 125 PSIG

**Lubricator Bowl Options**
- A Polycarbonate
- D Zinc

**⚠ WARNING**

**Product rupture can cause serious injury.**
**Do not connect regulator to bottled gas.**
**Do not exceed maximum primary pressure rating.**

**⚠ CAUTION:**

**REGULATOR PRESSURE ADJUSTMENT –** The working range of knob adjustment is designed to permit outlet pressures within their full range. Pressure adjustment beyond this range is also possible because the knob is not a limiting device. This is a common characteristic of most industrial regulators, and limiting devices may be obtained only by special design.
For best performance, regulated pressure should always be set by increasing the pressure up to the desired setting.

## Mounting Bracket Kit

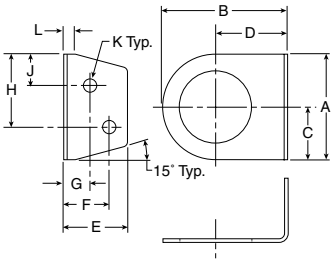


**SA161X57**
(Comes with R05X51-P Panel Nut)

## Dimensions

| A | B | C | D | E | F | G | H | J | K | L |
|---|---|---|---|---|---|---|---|---|---|---|
| 1.75 (44) | 2.06 (53) | .88 (22) | 1.19 (30) | 1.06 (27) | .75 (19) | .44 (11) | 1.22 (31) | .53 (13) | .22 (6) | .19 (5) |

Inches (mm)
Note: All dimensions nominal.



**Parker Hannifin Corporation**
Pneumatic Division
Richland, Michigan
www.wattsfluidair.com

# Close Nippled Combinations – C10 Compact & Standard Series

- See individual component pages for details.

## Two-Unit Combo

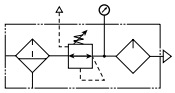

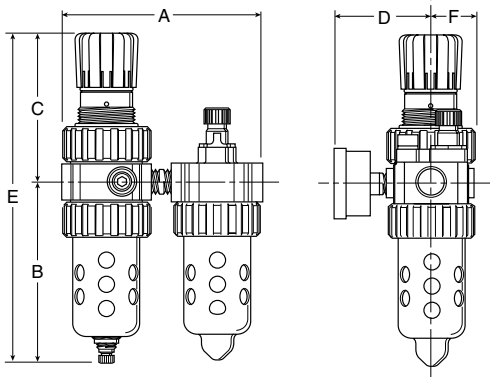


| Series | Port Size | Model Numbers |
|---|---|---|
| C10 | 1/4" (Compact) | **C10-02BL2A11A2B*** |
| | 3/8" (Compact) | **C10-03BL2A11A2B*** |
| | 1/2" (Compact) | **C10-04BL2A11A2B*** |
| | 3/4" (Standard) | **C10-06BL2A11A2B*** |

**For other models, refer to ordering information on next page.**

| C10 2-Unit Combination Dimensions | | | | | |
|---|---|---|---|---|---|
| **A** | **B** | **C** | **D** | **E** | **F** |
| **C10-02BL, C10-03BL, C10-04BL Compact** | | | | | |
| 6.13 (156) | 5.69 (145) | 4.69 (119) | 3.18 (81) | 10.38 (264) | 1.37 (35) |
| **C10-06BL Standard** | | | | | |
| 6.99 (178) | 6.97 (177) | 4.79 (122) | 3.44 (87) | 11.76 (299) | 1.63 (41) |

Inches (mm)
- All dimensions nominal.

## Three-Unit Combo

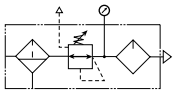

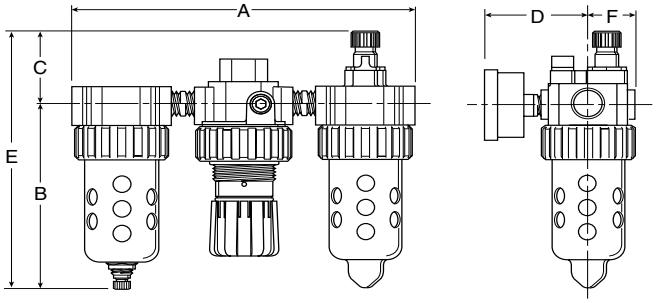


| Series | Port Size | Model Numbers |
|---|---|---|
| C10 | 1/4" (Compact) | **C10-02FRL2A11A2B*** |
| | 3/8" (Compact) | **C10-03FRL2A11A2B*** |
| | 1/2" (Compact) | **C10-04FRL2A11A2B*** |
| | 3/4" (Standard) | **C10-06FRL2A11A2B*** |

**For other models, refer to ordering information on next page.**

| C10 3-Unit Combination Dimensions | | | | | |
|---|---|---|---|---|---|
| **A** | **B** | **C** | **D** | **E** | **F** |
| **C10-02FRL, C10-03FRL, C10-04FRL Compact** | | | | | |
| 9.45 (240) | 5.69 (145) | 2.24 (57) | 3.18 (81) | 7.93 (201) | 1.37 (35) |
| **C10-06FRL Standard** | | | | | |
| 10.74 (2738) | 6.97 (177) | 2.41 (61) | 3.44 (87) | 9.38 (238) | 1.63 (41) |

Inches (mm)
- All dimensions nominal.

**BOLD ITEMS ARE MOST POPULAR.**



**Parker Hannifin Corporation**
Pneumatic Division
Richland, Michigan
www.wattsfluidair.com

# Close Nippled Combinations – C10 Compact & Standard Series

## Ordering Information

| C10 | – | 02 | FRL | 2 | A | 11 | A | 2 | B | * |
|---|---|---|---|---|---|---|---|---|---|---|

**Thread**
- **– NPT**
- G* BSPP

* 1/4 & 3/8 inch meet ISO 1179-1 Standard.

**Port Size**
- **02 1/4 Inch**
- **03 3/8 Inch**
- **04 1/2 Inch**
- **06 3/4 Inch**

**Combo Type**
- **FRL Filter + Regulator + Lubricator (3 piece combination)**
- **BL Filter / Regulator + Lubricator (2 piece combination)**

**Filter Bowl & Drain**

**Poly Bowl**
- **2 Metal Bowl Guard / Twist Drain**
- **6 Metal Bowl Guard / Auto Float Drain**

**Metal Bowl**
- 3 Twist Drain
- **4 Sight Gauge / Twist Drain**
- 7 Auto Float Drain
- **8 Sight Gauge / Auto Float Drain**

**Filter Element**
- **A 40 Micron**

**Pressure Range**

Without Gauge
- **11 0-60 PSIG**
- **13 0-125 PSIG**
- 15§ 0-250 PSIG

With Gauge
- **16 0-60 PSIG**
- **18 0-125 PSIG**
- 21§ 0-250 PSIG

§ If 250 psig spring range is used, use metal bowl.

**Relief**
- **A Relieving**
- L Non- Relieving

**Lubricator Bowl & Drain**

**Poly Bowl**
- **2 Metal Bowl Guard / No Drain**
- 6 Metal Bowl Guard / Pressure Fill
- N Metal Bowl Guard / Twist Drain

**Metal Bowl**
- **4 Twist Drain**
- 8 Pressure Fill

**Lubricator Body Options**
- **B With Fill Plug**
- F With Body Pressure Fill

**Engineering Level**
- * Will be Entered at Factory

**BOLD ITEMS ARE MOST POPULAR.**

### ⚠ CAUTION:

**REGULATOR PRESSURE ADJUSTMENT –** The working range of knob adjustment is designed to permit outlet pressures within their full range. Pressure adjustment beyond this range is also possible because the knob is not a limiting device. This is a common characteristic of most industrial regulators, and limiting devices may be obtained only by special design.
For best performance, regulated pressure should always be set by increasing the pressure up to the desired setting.

### ⚠ WARNING

**Product rupture can cause serious injury.**
**Do not connect regulator to bottled gas.**
**Do not exceed maximum primary pressure rating.**

For polycarbonate bowl and sight dome, see Caution on Inside Cover.

## Kits & Accessories

(See individual component sections for other kits and accessories.)

**Mounting Bracket Kit (Includes Panel Mount Nut)**

1/4", 3/8" , 1/2" .....PS707
3/4" .....PS807



**Parker Hannifin Corporation**
Pneumatic Division
Richland, Michigan
www.wattsfluidair.com

# Standard Combinations – C628 Series

## Three-Unit Combo

- See individual component pages for details.
- Gauges included on combinations.

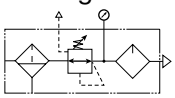

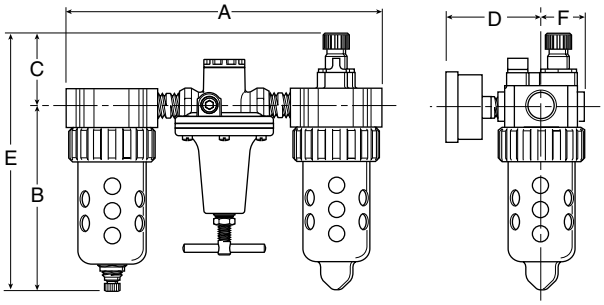


| Series | Port Size | Model Numbers |
|---|---|---|
| C628 | 1/4" | **C628-02FRL2ACA2B*** |
| | 3/8" | **C628-03FRL2ACA2B*** |
| | 1/2" | **C628-04FRL2ACA2B*** |

**For other models, refer to ordering information.**

| A | B | C | D | E | F |
|---|---|---|---|---|---|
| **C628-02FRL, C628-03FRL** | | | | | |
| 9.64 (245) | 5.69 (145) | 2.24 (57) | 3.18 (81) | 7.93 (201) | 1.37 (35) |
| **C628-04FRL** | | | | | |
| 10.55 (268) | 5.69 (145) | 2.24 (57) | 3.18 (81) | 7.93 (201) | 1.37 (35) |

Inches (mm)
- All dimensions nominal.

## Ordering Information

| C628 | – | 02 | FRL | 2 | A | C | A | 2 | B | * |
|---|---|---|---|---|---|---|---|---|---|---|

**Thread**
- **– NPT**
- G* BSPP

* 1/4 & 3/8 inch meet ISO 1179-1 Standard.

**Port Size**
- **02 1/4 Inch**
- **03 3/8 Inch**
- **04 1/2 Inch**

**Combo Type**
- **FRL Filter + Regulator + Lubricator (3 piece combination)**

**Filter Element**
- **A 40 Micron**

**Pressure Range**
- **C 0-125 psig**
- D 0-250 psig

**Relief**
- **A Relieving**
- L Non-Relieving

**Lubricator Body Options**
- **B With Fill Plug**
- F With Body Pressure Fill

**Engineering Level**
- * Will be Entered at Factory

**Filter Bowl & Drain**

**Poly Bowl**
- **2 Metal Bowl Guard / Twist Drain**
- **6 Metal Bowl Guard / Auto Float Drain**

**Metal Bowl**
- 3 Twist Drain
- **4 Sight Gauge / Twist Drain**
- 7 Auto Float Drain
- **8 Sight Gauge / Auto Float Drain**

**Lubricator Bowl & Drain**

**Poly Bowl**
- **2 Metal Bowl Guard / No Drain**
- 6 Metal Bowl Guard / Pressure Fill
- N Metal Bowl Guard / Twist Drain

**Metal Bowl**
- **4 Twist Drain**
- 8 Pressure Fill

### ⚠ WARNING

**Product rupture can cause serious injury.**
**Do not connect regulator to bottled gas.**
**Do not exceed maximum primary pressure rating.**

### ⚠ CAUTION:

**REGULATOR PRESSURE ADJUSTMENT –** The working range of knob adjustment is designed to permit outlet pressures within their full range. Pressure adjustment beyond this range is also possible because the knob is not a limiting device. This is a common characteristic of most industrial regulators, and limiting devices may be obtained only by special design.
For best performance, regulated pressure should always be set by increasing the pressure up to the desired setting.

**BOLD ITEMS ARE MOST POPULAR.**

For polycarbonate bowl and sight dome, see Caution on Inside Cover.



**Parker Hannifin Corporation**
Pneumatic Division
Richland, Michigan
www.wattsfluidair.com

# Standard Combinations – C628 Series

## Three-Unit Combo

- See individual component pages for details.
- Gauges included on combinations.

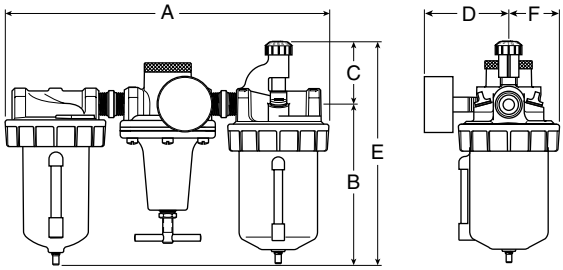


| Series | Port Size | Model Numbers |
|---|---|---|
| C628 | 3/4" | **C628-06FRLWJCW** |
| | 1" | **C628-08FRLWJCW** |
| | 1-1/4" | **C628-10FRLWJCW** |
| | 1-1/2" | **C628-12FRLWJCW** |

For other models, refer to ordering information below.

| A | B | C | D | E | F |
|---|---|---|---|---|---|
| **C628-06FRL, C628-08FRL** | | | | | |
| 15.75 (400) | 7.75 (197) | 2.63 (67) | 3.52 (89) | 13.00 (330) | 2.48 (63) |
| **C628-10FRL, C628-12FRL** | | | | | |
| 16.50 (419) | 8.13 (206) | 2.84 (72) | 3.86 (98) | 14.13 (359) | 2.64 (67) |

Inches (mm)
- All dimensions nominal.

## Ordering Information

| C628 | – | 06 | FRL | W | J | C | W | |
|---|---|---|---|---|---|---|---|---|

**Thread**
- **– NPT**

**Port Size**
- **06 3/4 Inch**
- **08 1 Inch**
- **10 1-1/4 Inch**
- **12 1-1/2 Inch**

**Combo Type**
- **FRL Filter + Regulator + Lubricator (3 piece combination)**

**Filter Element**
- **J 40 Micron**

**Filter Bowl Options**
- E 32 oz. Large Capacity wo/ Sight Gauge
- **W 16 oz. Metal w/Sight Gauge**

**Pressure Range**
- **C 0-125 psig**
- D 0-250 psig

**Drains and Options**
- H Button Head Fill Fitting (Lubricator)
- K Non-Relieving Regulator
- Q External Heavy Duty Auto Drain (Filter)
- R Internal Auto Drain (Filter)
- X9 Manual Twist Drain on Lubricator (Increases Product Length by 9/16 Inch)

**Lubricator Bowl Options**
- E 32 oz. Large Capacity wo/ Sight Gauge
- **W 16 oz. Metal w/Sight Gauge**

### ⚠ CAUTION:

**REGULATOR PRESSURE ADJUSTMENT –** The working range of knob adjustment is designed to permit outlet pressures within their full range. Pressure adjustment beyond this range is also possible because the knob is not a limiting device. This is a common characteristic of most industrial regulators, and limiting devices may be obtained only by special design.
For best performance, regulated pressure should always be set by increasing the pressure up to the desired setting.

### ⚠ WARNING

**Product rupture can cause serious injury.**
**Do not connect regulator to bottled gas.**
**Do not exceed maximum primary pressure rating.**

**BOLD ITEMS ARE MOST POPULAR.**



**Parker Hannifin Corporation**
Pneumatic Division
Richland, Michigan
www.wattsfluidair.com

## Notes



**Parker Hannifin Corporation**
Pneumatic Division
Richland, Michigan
www.wattsfluidair.com

## Notes



**Parker Hannifin Corporation**
Pneumatic Division
Richland, Michigan
www.wattsfluidair.com

# Safety Guide For Selecting And Using Pneumatic Division Products And Related Accessories

**⚠ WARNING:**

**FAILURE OR IMPROPER SELECTION OR IMPROPER USE OF PNEUMATIC DIVISION PRODUCTS, ASSEMBLIES OR RELATED ITEMS ("PRODUCTS") CAN CAUSE DEATH, PERSONAL INJURY, AND PROPERTY DAMAGE. POSSIBLE CONSEQUENCES OF FAILURE OR IMPROPER SELECTION OR IMPROPER USE OF THESE PRODUCTS INCLUDE BUT ARE NOT LIMITED TO:**

- Unintended or mistimed cycling or motion of machine members or failure to cycle
- Work pieces or component parts being thrown off at high speeds.
- Failure of a device to function properly for example, failure to clamp or unclamp an associated item or device.
- Explosion
- Suddenly moving or falling objects.
- Release of toxic or otherwise injurious liquids or gasses.

Before selecting or using any of these Products, it is important that you read and follow the instructions below.

**1. GENERAL INSTRUCTIONS**

**1.1. Scope:** This safety guide is designed to cover general guidelines on the installation, use, and maintenance of Pneumatic Division Valves, FRLs (Filters, Pressure Regulators, and Lubricators), Vacuum products and related accessory components.

**1.2. Fail-Safe:** Valves, FRLs, Vacuum products and their related components can and do fail without warning for many reasons. Design all systems and equipment in a fail-safe mode, so that failure of associated valves, FRLs or Vacuum products will not endanger persons or property.

**1.3 Relevant International Standards:** For a good guide to the application of a broad spectrum of pneumatic fluid power devices see: ISO 4414:1998, Pneumatic Fluid Power – General Rules Relating to Systems. See www.iso.org for ordering information.

**1.4. Distribution:** Provide a copy of this safety guide to each person that is responsible for selection, installation, or use of Valves, FRLs or Vacuum products. Do not select, or use Parker valves, FRLs or vacuum products without thoroughly reading and understanding this safety guide as well as the specific Parker publications for the products considered or selected.

**1.5. User Responsibility:** Due to the wide variety of operating conditions and applications for valves, FRLs, and vacuum products Parker and its distributors do not represent or warrant that any particular valve, FRL or vacuum product is suitable for any specific end use system. This safety guide does not analyze all technical parameters that must be considered in selecting a product. The user, through its own analysis and testing, is solely responsible for:

- Making the final selection of the appropriate valve, FRL, Vacuum component, or accessory.
- Assuring that all user's performance, endurance, maintenance, safety, and warning requirements are met and that the application presents no health or safety hazards.
- Complying with all existing warning labels and / or providing all appropriate health and safety warnings on the equipment on which the valves, FRLs or Vacuum products are used; and,
- Assuring compliance with all applicable government and industry standards.

**1.6. Safety Devices:** Safety devices should not be removed, or defeated.

**1.7. Warning Labels:** Warning labels should not be removed, painted over or otherwise obscured.

**1.8. Additional Questions:** Call the appropriate Parker technical service department if you have any questions or require any additional information. See the Parker publication for the product being considered or used, or call 1-800-CPARKER, or go to www.parker.com, for telephone numbers of the appropriate technical service department.

**2. PRODUCT SELECTION INSTRUCTIONS**

**2.1. Flow Rate:** The flow rate requirements of a system are frequently the primary consideration when designing any pneumatic system. System components need to be able to provide adequate flow and pressure for the desired application.

**2.2. Pressure Rating:** Never exceed the rated pressure of a product. Consult product labeling, Pneumatic Division catalogs or the instruction sheets supplied for maximum pressure ratings.

**2.3. Temperature Rating:** Never exceed the temperature rating of a product. Excessive heat can shorten the life expectancy of a product and result in complete product failure.

**2.4. Environment:** Many environmental conditions can affect the integrity and suitability of a product for a given application. Pneumatic Division products are designed for use in general purpose industrial applications. If these products are to be used in unusual circumstances such as direct sunlight and/or corrosive or caustic environments, such use can shorten the useful life and lead to premature failure of a product.

**2.5. Lubrication and Compressor Carryover:** Some modern synthetic oils can and will attack nitrile seals. If there is any possibility of synthetic oils or greases migrating into the pneumatic components check for compatibility with the seal materials used. Consult the factory or product literature for materials of construction.

**2.6. Polycarbonate Bowls and Sight Glasses:** To avoid potential polycarbonate bowl failures:

- Do not locate polycarbonate bowls or sight glasses in areas where they could be subject to direct sunlight, impact blow, or temperatures outside of the rated range.
- Do not expose or clean polycarbonate bowls with detergents, chlorinated hydro-carbons, keytones, esters or certain alcohols.
- Do not use polycarbonate bowls or sight glasses in air systems where compressors are lubricated with fire resistant fluids such as phosphate ester and di-ester lubricants.



**Parker Hannifin Corporation**
Pneumatic Division
Richland, Michigan
www.wattsfluidair.com

**2.7. Chemical Compatibility:** For more information on plastic component chemical compatibility see Pneumatic Division technical bulletins Tec-3, Tec-4, and Tec-5

**2.8. Product Rupture:** Product rupture can cause death, serious personal injury, and property damage.
- Do not connect pressure regulators or other Pneumatic Division products to bottled gas cylinders.
- Do not exceed the maximum primary pressure rating of any pressure regulator or any system component.
- Consult product labeling or product literature for pressure rating limitations.

**3. PRODUCT ASSEMBLY AND INSTALLATION INSTRUCTIONS**

**3.1. Component Inspection:** Prior to assembly or installation a careful examination of the valves, FRLs or vacuum products must be performed. All components must be checked for correct style, size, and catalog number. DO NOT use any component that displays any signs of nonconformance.

**3.2. Installation Instructions:** Parker published Installation Instructions must be followed for installation of Parker valves, FRLs and vacuum components. These instructions are provided with every Parker valve or FRL sold, or by calling 1-800-CPARKER, or at www.parker.com.

**3.3. Air Supply:** The air supply or control medium supplied to Valves, FRLs and Vacuum components must be moisture-free if ambient temperature can drop below freezing

**4. VALVE AND FRL MAINTENANCE AND REPLACEMENT INSTRUCTIONS**

**4.1. Maintenance:** Even with proper selection and installation, valve, FRL and vacuum products service life may be significantly reduced without a continuing maintenance program. The severity of the application, risk potential from a component failure, and experience with any known failures in the application or in similar applications should determine the frequency of inspections and the servicing or replacement of Pneumatic Division products so that products are replaced before any failure occurs. A maintenance program must be established and followed by the user and, at minimum, must include instructions 4.2 through 4.10.

**4.2. Installation and Service Instructions:** Before attempting to service or replace any worn or damaged parts consult the appropriate Service Bulletin for the valve or FRL in question for the appropriate practices to service the unit in question. These Service and Installation Instructions are provided with every Parker valve and FRL sold, or are available by calling 1-800-CPARKER, or by accessing the Parker web site at www.parker.com.

**4.3. Lockout / Tagout Procedures:** Be sure to follow all required lockout and tagout procedures when servicing equipment. For more information see: OSHA Standard – 29 CFR, Part 1910.147, Appendix A, The Control of Hazardous Energy – (Lockout / Tagout)

**4.4. Visual Inspection:** Any of the following conditions requires immediate system shut down and replacement of worn or damaged components:
- Air leakage: Look and listen to see if there are any signs of visual damage to any of the components in the system. Leakage is an indication of worn or damaged components.
- Damaged or degraded components: Look to see if there are any visible signs of wear or component degradation.
- Kinked, crushed, or damaged hoses. Kinked hoses can result in restricted air flow and lead to unpredictable system behavior.
- Any observed improper system or component function: Immediately shut down the system and correct malfunction.
- Excessive dirt build-up: Dirt and clutter can mask potentially hazardous situations.

**Caution: Leak detection solutions should be rinsed off after use.**

**4.5. Routine Maintenance Issues:**
- Remove excessive dirt, grime and clutter from work areas.
- Make sure all required guards and shields are in place.

**4.6. Functional Test:** Before initiating automatic operation, operate the system manually to make sure all required functions operate properly and safely.

**4.7. Service or Replacement Intervals:** It is the user's responsibility to establish appropriate service intervals. Valves, FRLs and vacuum products contain components that age, harden, wear, and otherwise deteriorate over time. Environmental conditions can significantly accelerate this process. Valves, FRLs and vacuum components need to be serviced or replaced on routine intervals. Service intervals need to be established based on:
- Previous performance experiences.
- Government and / or industrial standards.
- When failures could result in unacceptable down time, equipment damage or personal injury risk.

**4.8. Servicing or Replacing of any Worn or Damaged Parts:** To avoid unpredictable system behavior that can cause death, personal injury and property damage:
- Follow all government, state and local safety and servicing practices prior to service including but not limited to all OSHA Lockout Tagout procedures (OSHA Standard – 29 CFR, Part 1910.147, Appendix A, The Control of Hazardous Energy – Lockout / Tagout).
- Disconnect electrical supply (when necessary) before installation, servicing, or conversion.
- Disconnect air supply and depressurize all air lines connected to system and Pneumatic Division products before installation, service, or conversion.
- Installation, servicing, and / or conversion of these products must be performed by knowledgeable personnel who understand how pneumatic products are to be applied.
- After installation, servicing, or conversions air and electrical supplies (when necessary) should be connected and the product tested for proper function and leakage. If audible leakage is present, or if the product does not operate properly, do not put product or system into use.
- Warnings and specifications on the product should not be covered or painted over. If masking is not possible, contact your local representative for replacement labels.

**4.9. Putting Serviced System Back into Operation:** Follow the guidelines above and all relevant Installation and Maintenance Instructions supplied with the valve FRL or vacuum component to insure proper function of the system.


**Parker Hannifin Corporation**
Pneumatic Division
Richland, Michigan
www.wattsfluidair.com

# Offer of Sale

**The items described in this document and other documents and descriptions provided by Parker Hannifin Corporation, its subsidiaries and its authorized distributors ("Seller") are hereby offered for sale at prices to be established by Seller. This offer and its acceptance by any customer ("Buyer") shall be governed by all of the following Terms and Conditions. Buyer's order for any item described in its document, when communicated to Seller verbally, or in writing, shall constitute acceptance of this offer. All goods or work described will be referred to as "Products".**

**1. Terms and Conditions.** Seller's willingness to offer Products, or accept an order for Products, to or from Buyer is subject to these Terms and Conditions or any newer version of the terms and conditions found on-line at www.parker.com/saleterms/. Seller objects to any contrary or additional terms or conditions of Buyer's order or any other document issued by Buyer.

**2. Price Adjustments; Payments.** Prices stated on Seller's quote or other documentation offered by Seller are valid for 30 days, and do not include any sales, use, or other taxes unless specifically stated, Unless otherwise specified by Seller, all prices are F.C.A. Seller's facility (INCOTERMS 2010). Payment is subject to credit approval and is due 30 days from the date of invoice or such other term as required by Seller's Credit Department, after which Buyer shall pay interest on any unpaid invoices at the rate of 1.5% per month or the maximum allowable rate under applicable law.

**3. Delivery Dates; Title and Risk; Shipment.** All delivery dates are approximate and Seller shall not be responsible for any damages resulting from any delay. Regardless of the manner of shipment, title to any products and risk of loss or damage shall pass to Buyer upon placement of the products with the shipment carrier at Seller's facility. Unless otherwise stated, Seller may exercise its judgment in choosing the carrier and means of delivery. No deferment of shipment at Buyers' request beyond the respective dates indicated will be made except on terms that will indemnify, defend and hold Seller harmless against all loss and additional expense. Buyer shall be responsible for any additional shipping charges incurred by Seller due to Buyer's acts or omissions.

**4. Warranty.** Seller warrants that the Products sold hereunder shall be free from defects in material or workmanship for a period of twelve months from the date of delivery to Buyer or 2,000 hours of normal use, whichever occurs first. The prices charged for Seller's products are based upon the exclusive limited warranty stated above, and upon the following disclaimer: **DISCLAIMER OF WARRANTY: THIS WARRANTY COMPRISES THE SOLE AND ENTIRE WARRANTY PERTAINING TO PRODUCTS PROVIDED HEREUNDER. SELLER DISCLAIMS ALL OTHER WARRANTIES, EXPRESS AND IMPLIED, INCLUDING DESIGN, MERCHANTABILITY AND FITNESS FOR A PARTICULAR PURPOSE.**

**5. Claims; Commencement of Actions.** Buyer shall promptly inspect all Products upon delivery. No claims for shortages will be allowed unless reported to the Seller within 10 days of delivery. No other claims against Seller will be allowed unless asserted in writing within 30 days after delivery. Buyer shall notify Seller of any alleged breach of warranty within 30 days after the date the defect is or should have been discovered by Buyer. Any action based upon breach of this agreement or upon any other claim arising out of this sale (other than an action by Seller for an amount due on any invoice) must be commenced within 12 months from the date of the breach without regard to the date breach is discovered.

**6. LIMITATION OF LIABILITY.** UPON NOTIFICATION, SELLER WILL, AT ITS OPTION, REPAIR OR REPLACE A DEFECTIVE PRODUCT, OR REFUND THE PURCHASE PRICE. **IN NO EVENT SHALL SELLER BE LIABLE TO BUYER FOR ANY SPECIAL, INDIRECT, INCIDENTAL OR CONSEQUENTIAL DAMAGES ARISING OUT OF, OR AS THE RESULT OF, THE SALE, DELIVERY, NON-DELIVERY, SERVICING, USE OR LOSS OF USE OF THE PRODUCTS OR ANY PART THEREOF, OR FOR ANY CHARGES OR EXPENSES OF ANY NATURE INCURRED WITHOUT SELLER'S WRITTEN CONSENT, EVEN IF SELLER HAS BEEN NEGLIGENT, WHETHER IN CONTRACT, TORT OR OTHER LEGAL THEORY. IN NO EVENT SHALL SELLER'S LIABILITY UNDER ANY CLAIM MADE BY BUYER EXCEED THE PURCHASE PRICE OF THE PRODUCTS.**

**7. User Responsibility.** The user, through its own analysis and testing, is solely responsible for making the final selection of the system and Product and assuring that all performance, endurance, maintenance, safety and warning requirements of the application are met. The user must analyze all aspects of the application and follow applicable industry standards and Product information. If Seller provides Product or system options, the user is responsible for determining that such data and specifications are suitable and sufficient for all applications and reasonably foreseeable uses of the Products or systems.

**8. Loss to Buyer's Property.** Any designs, tools, patterns, materials, drawings, confidential information or equipment furnished by Buyer or any other items which become Buyer's property, may be considered obsolete and may be destroyed by Seller after two consecutive years have elapsed without Buyer ordering the items manufactured using such property. Seller shall not be responsible for any loss or damage to such property while it is in Seller's possession or control.

**9. Special Tooling.** A tooling charge may be imposed for any special tooling, including without limitation, dies, fixtures, molds and patterns, acquired to manufacture Products. Such special tooling shall be and remain Seller's property notwithstanding payment of any charges by Buyer. In no event will Buyer acquire any interest in apparatus belonging to Seller which is utilized in the manufacture of the Products, even if such apparatus has been specially converted or adapted for such manufacture and notwithstanding any charges paid by Buyer. Unless otherwise agreed, Seller shall have the right to alter, discard or otherwise dispose of any special tooling or other property in its sole discretion at any time.

**10. Buyer's Obligation; Rights of Seller.** To secure payment of all sums due or otherwise, Seller shall retain a security interest in the goods delivered and this agreement shall be deemed a Security Agreement under the Uniform Commercial Code. Buyer authorizes Seller as its attorney to execute and file on Buyer's behalf all documents Seller deems necessary to perfect its security interest.

**11. Improper use and Indemnity.** Buyer shall indemnify, defend, and hold Seller harmless from any claim, liability, damages, lawsuits, and costs (including attorney fees), whether for personal injury, property damage, patent, trademark or copyright infringement or any other claim, brought by or incurred by Buyer, Buyer's employees, or any other person, arising out of: (a) improper selection, improper application or other misuse of Products purchased by Buyer from Seller; (b) any act or omission, negligent or otherwise, of Buyer; (c) Seller's use of patterns, plans, drawings, or specifications furnished by Buyer to manufacture Product; or (d) Buyer's failure to comply with these terms and conditions. Seller shall not indemnify Buyer under any circumstance except as otherwise provided.

**12. Cancellations and Changes.** Orders shall not be subject to cancellation or change by Buyer for any reason, except with Seller's written consent and upon terms that will indemnify, defend and hold Seller harmless against all direct, incidental and consequential loss or damage. Seller may change product features, specifications, designs and availability with notice to Buyer.

**13. Limitation on Assignment.** Buyer may not assign its rights or obligations under this agreement without the prior written consent of Seller.

**14. Force Majeure.** Seller does not assume the risk and shall not be liable for delay or failure to perform any of Seller's obligations by reason of circumstances beyond the reasonable control of Seller (hereinafter "Events of Force Majeure") Events of Force Majeure shall include without limitation: accidents, strikes or labor disputes, acts of any government or government agency, acts of nature, delays or failures in delivery from carriers or suppliers, shortages of materials, or any other cause beyond Seller's reasonable control.

**15. Waiver and Severability.** Failure to enforce any provision of this agreement will not waive that provision nor will any such failure prejudice Seller's right to enforce that provision in the future. Invalidation of any provision of this agreement by legislation or other rule of law shall not invalidate any other provision herein. The remaining provisions of this agreement will remain in full force and effect.

**16. Termination.** Seller may terminate this agreement for any reason and at any time by giving Buyer thirty (30) days written notice of termination. Seller may immediately terminate this agreement, in writing, if Buyer: (a) commits a breach of any provision of this agreement (b) appointments a trustee, receiver or custodian for all or any part of Buyer's property (c) files a petition for relief in bankruptcy on its own behalf, or by a third party (d) makes an assignment for the benefit of creditors, or (e) the dissolves or liquidates all or a majority of its assets.

**17. Governing Law.** This agreement and the sale and delivery of all Products hereunder shall be deemed to have taken place in and shall be governed and construed in accordance with the laws of the State of Ohio, as applicable to contracts executed and wholly performed therein and without regard to conflicts of laws principles. Buyer irrevocably agrees and consents to the exclusive jurisdiction and venue of the courts of Cuyahoga County, Ohio with respect to any dispute, controversy or claim arising out of or relating to this agreement.

**18. Indemnity for Infringement of Intellectual Property Rights.** Seller shall have no liability for infringement of any patents, trademarks, copyrights, trade dress, trade secrets or similar rights except as provided in this Section. Seller will defend and indemnify Buyer against allegations of infringement of U.S. patents, U.S. trademarks, copyrights, trade dress and trade secrets ("Intellectual Property Rights"). Seller will defend at its expense and will pay the cost of any settlement or damages awarded in an action brought against Buyer based on an allegation that a Product sold pursuant to this Agreement infringes the Intellectual Property Rights of a third party. Seller's obligation to defend and indemnify Buyer is contingent on Buyer notifying Seller within ten (10) days after Buyer becomes aware of such allegations of infringement, and Seller having sole control over the defense of any allegations or actions including all negotiations for settlement or compromise. If a Product is subject to a claim that it infringes the Intellectual Property Rights of a third party, Seller may, at its sole expense and option, procure for Buyer the right to continue using the Product, replace or modify the Product so as to make it noninfringing, or offer to accept return of the Product and return the purchase price less a reasonable allowance for depreciation. Notwithstanding the foregoing, Seller shall have no liability for claims of infringement based on information provided by Buyer, or directed to Products delivered hereunder for which the designs are specified in whole or part by Buyer, or infringements resulting from the modification, combination or use in a system of any Product sold hereunder. The foregoing provisions of this Section shall constitute Seller's sole and exclusive liability and Buyer's sole and exclusive remedy for infringement of Intellectual Property Rights.

**19. Entire Agreement.** This agreement contains the entire agreement between the Buyer and Seller and constitutes the final, complete and exclusive expression of the terms of sale. All prior or contemporaneous written or oral agreements or negotiations with respect to the subject matter are herein merged.

**20. Compliance with Law, U. K. Bribery Act and U.S. Foreign Corrupt Practices Act.** Buyer agrees to comply with all applicable laws and regulations, including both those of the United Kingdom and the United States of America, and of the country or countries of the Territory in which the Buyer may operate, including without limitation the U. K. Bribery Act, the U.S. Foreign Corrupt Practices Act ("FCPA") and the U.S. Anti-Kickback Act (the "Anti-Kickback Act"), and agrees to indemnify and hold harmless Seller from the consequences of any violation of such provisions by Buyer, its employees or agents. Buyer acknowledges that they are familiar with the provisions of the U. K. Bribery Act, the FCPA and the Anti-Kickback Act, and certifies that Buyer will adhere to the requirements thereof. In particular, Buyer represents and agrees that Buyer shall not make any payment or give anything of value, directly or indirectly to any governmental official, any foreign political party or official thereof, any candidate for foreign political office, or any commercial entity or person, for the purpose of influencing such person to purchase products or otherwise benefit the business of Seller.

02/12



**Parker Hannifin Corporation**
Pneumatic Division
Richland, Michigan
www.wattsfluidair.com

Catalog 0303 03/2013

Parker Hannifin Corporation
**Pneumatic Division**
8676 E. M89
P.O. Box 901
Richland, MI 49083 USA
Tel: 269 629 5000
Fax: 269 629 5385

Applications Engineering
Phone: 877 321 4PDN Option #2
E-mail: pdnapps@parker.com
Customer Support
Phone: 877 321 4PDN Option #1
E-mail: pdncustsvc@parker.com
Web site: www.parker.com/watts

**Pneumatic Division**
Richland, Michigan 49083
269-629-5000

**Installation & Service Instructions**
**IS-F602**

**F602 Particulate Filter**

**ISSUED: June, 2009**
**Supersedes: July, 2005**

**Doc. #ISF602, EN #090316, Rev. 3**

## ⚠ WARNING

**To avoid unpredictable system behavior that can cause personal injury and property damage:**

- **Disconnect electrical supply (when necessary) before installation, servicing, or conversion.**
- **Disconnect air supply and depressurize all air lines connected to this product before installation, servicing, or conversion.**
- **Operate within the manufacturer's specified pressure, temperature, and other conditions listed in these instructions.**
- **Medium must be moisture-free if ambient temperature is below freezing.**
- **Service according to procedures listed in these instructions.**
- **Installation, service, and conversion of these products must be performed by knowledgeable personnel who understand how pneumatic products are to be applied.**
- **After installation, servicing, or conversion, air and electrical supplies (when necessary) should be connected and the product tested for proper function and leakage. If audible leakage is present, or the product does not operate properly, do not put into use.**
- **Warnings and specifications on the product should not be covered by paint, etc. If masking is not possible, contact your local representative for replacement labels.**

## ⚠ CAUTION

Polycarbonate bowls, being transparent and tough, are ideal for use with Filters and Lubricators. They are suitable for use in normal industrial environments, but should not be located in areas where they could be subjected to direct sunlight, an impact blow, nor temperatures outside of the rated range. As with most plastics, some chemicals can cause damage. Polycarbonate bowls should not be exposed to chlorinated hydrocarbons, ketones, esters and certain alcohols. They should not be used in air systems where compressors are lubricated with fire-resistant fluids such as phosphate ester and di-ester types.

Metal bowls are recommended where ambient and/or media conditions are not compatible with polyurethane bowls. Metal bowls resist the action of most such solvents, but should not be used where strong acids or bases are present or in salt laden atmospheres. Consult the factory for specific recommendations where these conditions exist.

**TO CLEAN POLYCARBONATE BOWLS USE MILD SOAP AND WATER ONLY! DO NOT** use cleansing agents such as acetone, benzene, carbon tetrachloride, gasoline, toluene, etc., which are damaging to this plastic.

## Safety Guide

For more complete information on recommended application guidelines, see the Safety Guide section of Pneumatic Division catalogs or you can download the **Pneumatic Division Safety Guide** at: www.wattsfluidair.com

## Introduction

Follow these instructions when installing, operating, or servicing the product.

## Application Limits

These products are intended for use in general purpose compressed air systems only.

## Maximum Recommended Pressure Drop:

| | kPa | PSIG | bar |
|---|---|---|---|
| **Particulate Filter** | 70 | 10 | 0.7 |

## With Polycarbonate Bowl

| | kPa | PSIG | bar |
|---|---|---|---|
| **Operating Pressure Maximum** | 1034 | 150 | 10 |

**Operating Temperature Range** 4°C to 49°C (40°F to 120°F)

## With Aluminum Bowl

| | kPa | PSIG | bar |
|---|---|---|---|
| **Operating Pressure Maximum** | 2068 | 300 | 21 |

**Operating Temperature Range** 4°C to 82°C (40°F to 180°F)

## With Zinc Bowl with Sight Gauge

| | kPa | PSIG | bar |
|---|---|---|---|
| **Operating Pressure Maximum** | 1723 | 250 | 17.0 |

**Operating Temperature Range** 4°C to 66°C (40°F to 150°F)

## ANSI Symbols

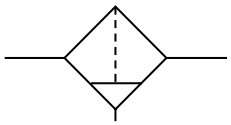

**Filter w/Manual Drain**

## ⚠ WARNING

**FAILURE OR IMPROPER SELECTION OR IMPROPER USE OF THE PRODUCTS AND/OR SYSTEMS DESCRIBED HEREIN OR RELATED ITEMS CAN CAUSE DEATH, PERSONAL INJURY AND PROPERTY DAMAGE.**

This document and other information from The Company, its subsidiaries and authorized distributors provide product and/or system options for further investigation by users having technical expertise. It is important that you analyze all aspects of your application, including consequences of any failure and review the information concerning the product or systems in the current product catalog. Due to the variety of operating conditions and applications for these products or systems, the user, through its own analysis and testing, is solely responsible for making the final selection of the products and systems and assuring that all performance, safety and warning requirements of the application are met.

The products described herein, including without limitation, product features, specifications, designs, availability and pricing, are subject to change by The Company and its subsidiaries at any time without notice.

**EXTRA COPIES OF THESE INSTRUCTIONS ARE AVAILABLE FOR INCLUSION IN EQUIPMENT / MAINTENANCE MANUALS THAT UTILIZE THESE PRODUCTS. CONTACT YOUR LOCAL REPRESENTATIVE.**

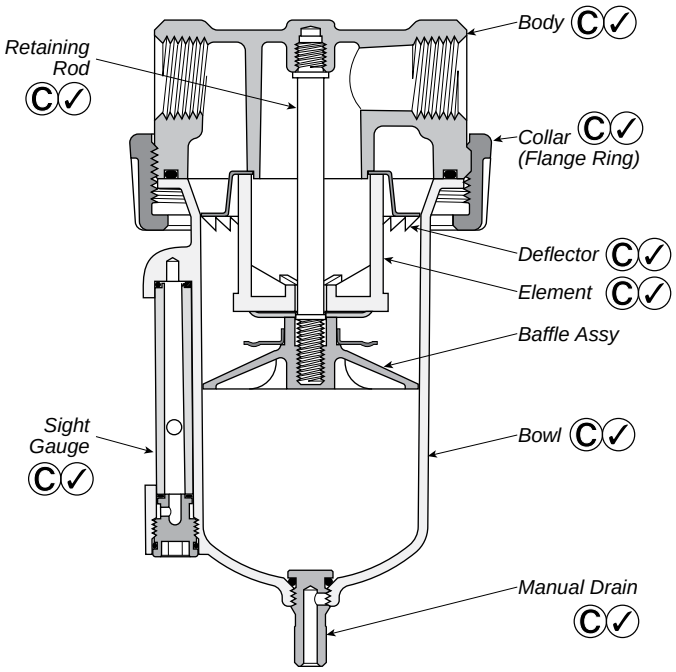


Lightly grease with provided lubricant.

Inspect for nicks, scratches, and surface imperfections. If present, reduced service life is probable and future replacement should be planned.

Clean with lint-free cloth.

## Installation

1. The filter should be installed with reasonable accessibility for service whenever possible – repair service kits are available. Keep pipe or tubing lengths to a minimum with inside clean and free of dirt and chips. Pipe joint compound should be used sparingly and applied only to the male pipe – never into the female port. Do not use PTFE tape to seal pipe joints – pieces have a tendency to break off and lodge inside the unit, possibly causing malfunction. Also, new pipe or hose should be installed between the filter and equipment being protected.
2. The upstream pipe work must be clear of accumulated dirt and liquids.
3. Select a filter location as close as possible to the equipment being protected and upstream of any pressure regulator.
4. Install filter so that air flows in the direction of arrow on body.
5. Install filter vertically with bowl drain mechanism at the bottom. Free moisture will thus drain into the sump “quiet zone” at the bottom of the bowl.

## Operation and Service

1. To service the filter, it is not necessary to remove the unit from the airline. Manual drain filters must be drained regularly before the separated moisture and oil reaches the bottom of the lower baffle.
2. The particulate Filter Element should be removed and replaced when pressure differential across the filter is 10 PSIG.
3. Shut off air supply and depressurize the unit, before servicing.
4. Carefully remove Bowl by turning counterclockwise.
5. Remove Filter Element, Baffle, and Retainer.
6. Wipe parts, clean with soapy water or denatured alcohol, **but do not use denatured alcohol on plastic bowl or sight gauge**. If using compressed air to blow dry, be sure to wear appropriate eye protection.
7. After servicing, apply system pressure and check for air leaks. If leakage occurs, **Do Not Operate** — conduct servicing again.

## Kits Available

| Description | Product Number | Bowl Type | Port Size |
|---|---|---|---|
| Bowls | | | |
| Polycarbonate | BK602Y | B | 1/4", 3/8" |
| Zinc with Sight Gauge | BK605WY | W | 1/4", 3/8" |
| Polycarbonate | BK602A | B | 1/2" |
| Aluminum | BK603A | E | 1/2" |
| Zinc with Sight Gauge | BK605WA | W | 1/2" |
| Aluminum | BK603B | E | 3/4" thru 2-1/2" |
| Zinc with Sight Gauge | BK605WB | W | 3/4" thru 2-1/2" |
| Element Kits | | | |
| 5 Micron | EK602VY | — | 1/4", 3/8" |
| 40 Micron | EK602Y | — | 1/4", 3/8" |
| 5 Micron | EK602VA | — | 1/2" |
| 40 Micron | EK602A | — | 1/2" |
| 5 Micron | EK602VB | — | 3/4" thru 1-1/2" |
| 40 Micron | EK602B | — | 3/4" thru 1-1/2" |
| 5 Micron Bronze | EK602VB-BR | — | 3/4" thru 1-1/2" |
| 40 Micron Bronze | EK602B-BR | — | 3/4" thru 1-1/2" |
| 40 Micron | EK602G | — | 2", 2-1/2" |
| Drain Kits | | | |
| Manual | SA600Y7-1 | All | All Sizes |
| Piston (Poly Bowl Only) | RK602SY | B | 1/4", 3/8" |
| Piston (Poly Bowl Only) | RK602SA | B | 1/2" |
| External Auto.( 8 oz. Poly & Metal) | SA602D | B | 1/2" |
| External Auto. (16 oz. Aluminum) | SA603D | E | 1/2" |
| Internal Auto. | SA602MD | All | 1/2" |
| External Auto.( 16 oz. Metal Bowl) | SA602D | W | 3/4" thru 2-1/2" |
| External Auto. (32 oz. Aluminum) | SA603D | E | 3/4" thru 2-1/2" |
| Internal Auto. | SA602MD | All | 3/4" thru 2-1/2" |
| Mounting Bracket Kits | | | |
| | SAF602-0571 | — | 1/4", 3/8" |
| | SAF602-0572 | — | 1/2" |
| (2 per unit required) | SA200AW57 | — | 3/4" |
| (2 per unit required) | SA200CW57 | — | 1" |
| Repair Kits | | | |
| Deflector, Baffle Assy, Retaining Rod | RK602Y | — | 1/4", 3/8" |
| Deflector, Baffle Assy, Retaining Rod | RK602A | — | 1/2" |
| Deflector, Baffle Assy, Retaining Rod | RK602B | — | 3/4", 1" |
| Deflector, Baffle Assy, Retaining Rod | RK602C | — | 1-1/4", 1-1/2" |
| Deflector, Baffle Assy, Retaining Rod | RK602G | — | 2", 2-1/2" |
| External Auto Drain (Short Float 602) | RK602D | — | 1/2" thru 2-1/2" |
| External Auto Drain (Tall Float 603) | RK603D | — | 1/2" thru 2-1/2" |
| Internal Auto Drain | RK602MD | — | 1/4" thru 2-1/2" |
| Metal Bowl with Sight Gauge | RKB605WY | — | 1/4", 3/8" |
| Metal Bowl with Sight Gauge | RKB605WA | — | 1/2" |

| REVISION HISTORY | | | | | | |
|---|---|---|---|---|---|---|
| ZONE | REV | DESCRIPTION | ECN # | DATE | DWN | CHK |
| | 00 | INITIAL RELEASE | 1129562 | 04-Nov-19 | | mdp7693 |

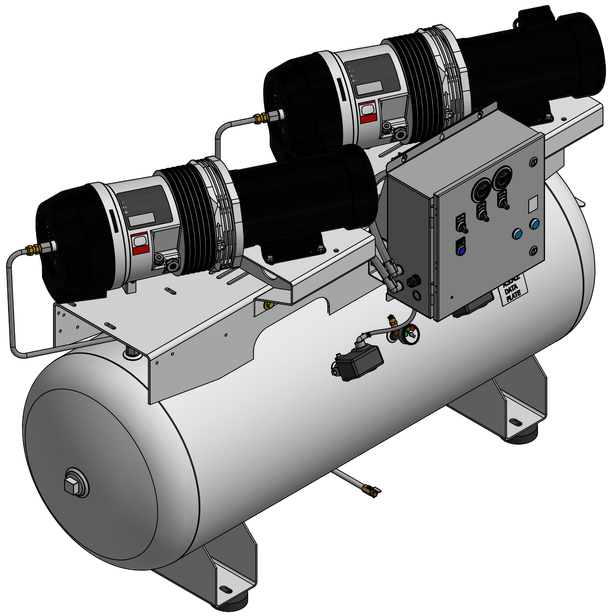

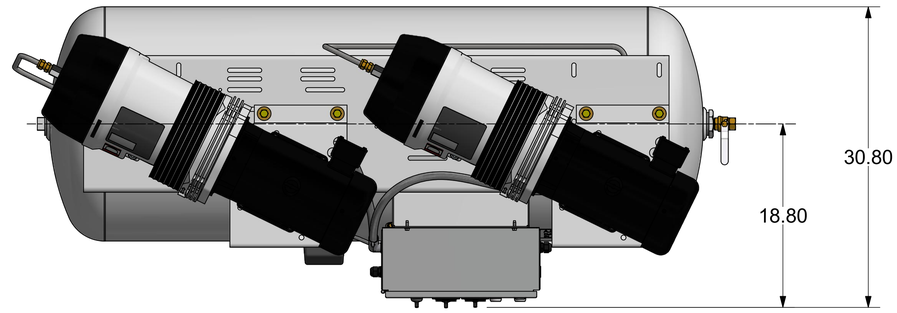


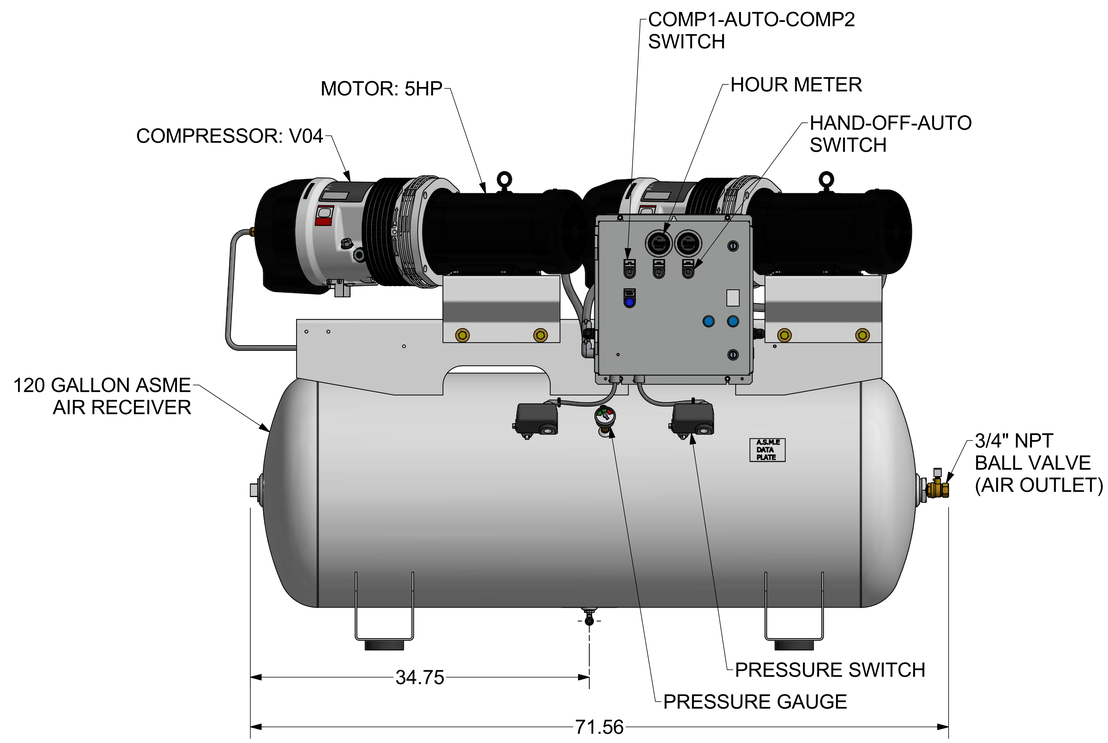


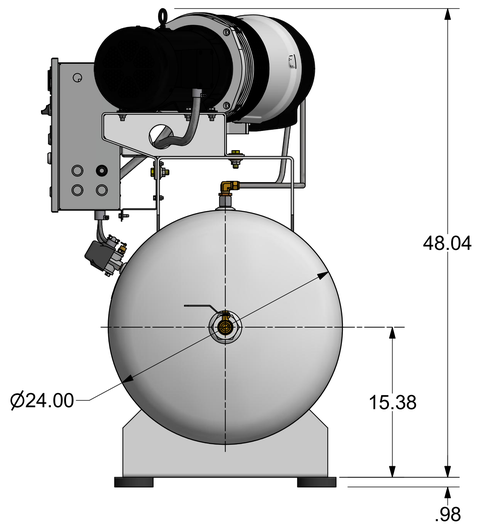


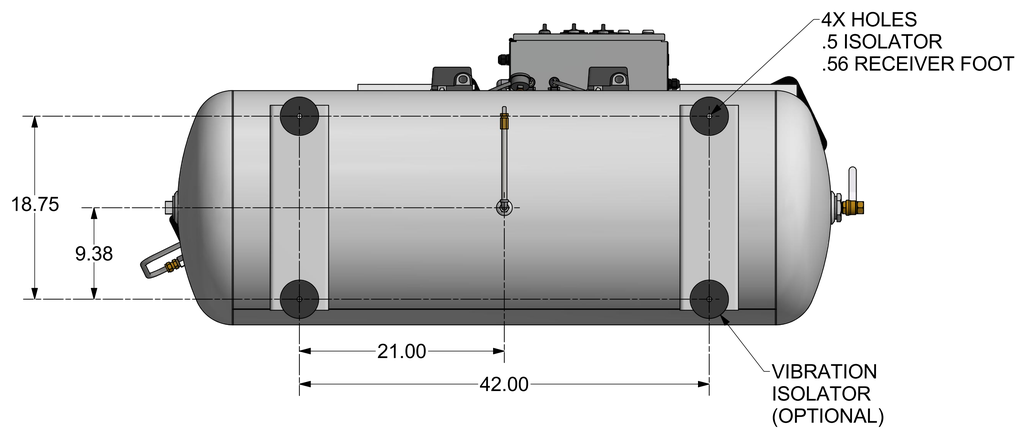


FINISH OF CHAMFERS AND FILLETS TO CONFORM TO ROUGHEST ADJACENT AREA.

SURFACE ROUGHNESS MAXIMUM PER ASME B46.1.
FULL THREAD DEPTHS ARE MINIMUM.

CONFIDENTIAL - THE INFORMATION CONTAINED IN THIS DOCUMENT IS THE PROPERTY OF GARDNER DENVER, INC. IT IS NOT FOR PUBLIC DISCLOSURE. POSSESSION OF THE INFORMATION DOES NOT CONVEY ANY RIGHT TO LOAN, SELL OR DISCLOSE THE INFORMATION. UNAUTHORIZED REPRODUCTION OR USE OF THE INFORMATION IS PROHIBITED. THIS DOCUMENT IS TO BE RETURNED TO GARDNER DENVER, INC. UPON THE COMPLETION OF THE PURPOSE FOR WHICH IT IS LOANED OR UPON REQUEST.

UNLESS OTHERWISE SPECIFIED
DIMENSIONS ARE IN INCHES

TOL. ON DECIMALS: .X = ± .05
TOL. ON DECIMALS: .XX = ± .02
TOL. ON DECIMALS: .XXX = ± AS SPECIFIED
TOL. ON ANGLES: = ± 0'-30'

THIRD ANGLE PROJECTION

DIMENSIONING AND TOLERANCING PER ASME Y14.5-2009
THREADS PER ASME B1.1 GAGING SYSTEM 21 U.O.S., ANSI B1.20.1 & B1.20.3

Gardner Denver
Gardner Denver Inc.
Quincy, IL.

HEAT TREATMENT | ENG. REF.

DESCRIPTION: 0800-OUTLINE-BARE UNIT
OUTLINE-UNIT/PKG,VR05-7,120H
DUPLEX

| DRAWN BY: | | SIZE | ENGR. APPROVAL | DWG NO. | REV. |
|---|---|---|---|---|---|
| dxw9433 | 30-Aug-19 | E | mrf0717 | 400HHD800 | 00 |
| CHECKED BY: mdp7693 | 04-Nov-19 | SCALE | | SHEET 1 OF 1 | |

| Gardner Denver | V01 - V04 | | | | [Eng.Rev.2] 1/6/2020 |
|---|---|---|---|---|---|
| | Technical Information Sheet | | | | |
| | Air Cooled, 60 Hz | | | | Machine Version: (B) |
| **Performance Data** | **Model** | **V01** | | **V04** | |
| **Working Pressure** | **psig** | **100** | **150** | **100** | **150** |
| Ambient temperature - min/max | **°F (°C)** | 32 to 104 (0 to 40) | | | |
| FAD (1)(3) @ max. working pressure | **cfm (m³/min)** | 6.3 (0.18) | 4.5 (0.13) | 19.5 (0.55) | 16 (0.45) |
| Total input power (when compressor is new) | **hp (kW)** | 2.3 (1.7) | 2.4 (1.8) | 6.6 (4.9) | 6.4 (4.8) |
| Total input power (after 500 operating hours) | **hp (kW)** | 2.1 (1.6) | 2.3 (1.7) | 6.2 (4.6) | 6.0 (4.5) |
| Total input power at no load | **hp (kW)** | 2.1 (1.6) | 2.3 (1.7) | 6.2 (4.6) | 6.0 (4.5) |
| **Compressor Details** | | | | | |
| Starter type | | Automatic Direct-On-Line | | | |
| Operating controls | | Hand-Off-Auto (HOA) | | | |
| Airend rotation speed | **rpm** | 1800 | | | |
| Rotor diameter | **in (mm)** | 2.44 (62) | | 3.35 (85) | |
| Stator diameter | **in (mm)** | 2.87 (73) | 2.80 (71) | 3.94 (100) | 3.82 (97) |
| Air discharge temperature (above ambient) | **°F (°C)** | 90 (32.2) | | | |
| Noise level (2) | **dB(A)** | 65 | | 72 | |
| **Electrical Data** | | ***Single phase - Direct-On-Line*** | | | |
| Nominal motor rating | **hp (kW)** | 2 (1) | | 5 (4) | |
| Electrical supply | **Voltage** | 115 / 208 / 230 | | 208 / 230 | |
| Full load current (4) @ max | **Amps** | 21.2 / 11.7 / 10.6 | | 28.0 / 25.3 | |
| Motor efficiency (at 100% Duty) | **%** | 78 | | 82.5 | |
| Starting current max. | | Approx. 6 times full load current | | | |
| Standard drive motor detail | | TEFC EISA 2007 | | | |
| Drive motor manufacturer | | Baldor | | | |
| Drive motor speed | **rpm** | 1800 | | | |
| **Electrical Data** | | ***Three phase - Direct-On-Line*** | | | |
| Nominal motor rating | **hp (kW)** | 2 (1) | | 5 (4) | |
| Electrical supply | **Voltage** | 208 / 230 / 460 | | 208 / 230 / 460 / 575 | |
| Full load current (4) @ max | **Amps** | 6.4 / 6.2 / 3.1 | | 15.8 / 14.3 / 7.2 / 5.7 | |
| Motor efficiency (at 100% Duty) | **%** | 86.5 | | 89.5 | |
| Starting current max. | | Approx. 6 times full load current | | | |
| Standard drive motor detail | | TEFC EISA 2007 | | | |
| Drive motor manufacturer | | Baldor | | | |
| Drive motor speed | **rpm** | 1800 | | | |
| **Weights and Capacities Data** | | | | | |
| Compressor oil capacity | **gal. (liters)** | 0.3 (1.14) | | 0.5 (1.89) | |
| Air outlet size | **NPT** | 1/2" | | | |
| | | | | 3/4" (100PSI Hypac only) | |
| Airend weight | **lbs (kg)** | 73 (33) | | 64 (29) | |

| **V01 Package Weights and Dimensional Data** | | | |
|---|---|---|---|
| | **Units** | **Bare Unit** | **Tripod** |
| Length | **in (mm)** | 27.4 (696) | 28.6 (727) |
| Width | **in (mm)** | 8.5 (216) | 18.5 (471) |
| Height | **in (mm)** | 10.5 (267) | 10.6 (270) |
| Weight | **lbs (kg)** | 90 (41) | 130 (59) |
| Outline Drawing | | 304HHS800 / 306HHS800 | TBD |

| **V04 Package Weights and Dimensional Data** | | | | | |
|---|---|---|---|---|---|
| | **Units** | **Bare Unit** | **80 Gallon (Vertical)** | **80 Gallon (Horizontal)** | |
| | | | | **Less Dryer** | **With Dryer** |
| Length | **in (mm)** | 35.6 (904) | 36.9 (937) | 67.1 (1704) | 65.1 (1653) |
| Width | **in (mm)** | 12.7 (323) | 27.1 (688) | 25 (635) | 31.4 (798) |
| Height (100 PSI) | **in (mm)** | 13.8 (350.5) | 65.3 (1659) | 39.1 (993) | 51.4 (1305) |
| Height (150 PSI) | **in (mm)** | | | | 49.2 (1250) |
| Weight (100 PSI) | **lbs (kg)** | 163 (74) | 394 (179) | 418 (190kg) | 584 (265) |
| Weight (150 PSI) | **lbs (kg)** | | | | 550 (249) |
| Outline Drawing | | 303HHS800 | 403HHS800 | 400HHS800 | 405HHS800 |

(1) Data measured and stated in accordance with ISO1217 4th Edition Annex C and at the following conditions

Air intake pressure - 1 bar a / 14.5 psia  Air intake Temperature - 20°C / 68°F  Humidity - 0%(dry)

(2) Measured in free field conditions in accordance with the ISO 2151, tolerance ±3dB(A)

(3) Values multiplied x2 for duplex packages

(4) Wiring, wire sizes, and over current protective devices utilized to power the compressor should be selected and installed in accordance with all applicable local electrical codes. NEC table 430.250 can be utilized to determine wire sizing only for fixed speed compressors, however local electrical codes always take precedence and should be consulted prior to sizing and running wire to operate the compressor.

Gardner Denver policy is one of continuous improvement and we therefore reserve the right to alter specifications without prior notice.

| V04 Package Weights and Dimensional Data (Continued) | | | | |
|---|---|---|---|---|
| | **Units** | **120 Gallon** | **240 Gallon** | **Duplex** |
| | | **With Dryer** | **With Dryer** | |
| Length | **in (mm)** | 69.5 (1765) | 86.1 (2187) | 76 (1930) |
| Width | **in (mm)** | 31.4 (798) | 32.9 (836) | 27.4 (696) |
| Height (100 PSI) | **in (mm)** | 56.1 (1425) | 63 (1600) | 48 (1219) |
| Height (150 PSI) | **in (mm)** | 53.7 (1364) | 60.5 (1536) | |
| Weight (100 PSI) | **lbs (kg)** | 704 (319) | 988 (448) | 845 (383) |
| Weight (150 PSI) | **lbs (kg)** | 670 (304) | 954 (433) | |
| Outline Drawing | | 406HHS800 | 407HHS800 | 400HHS800 |

(1) Data measured and stated in accordance with ISO1217 4th Edition Annex C and at the following conditions

Air intake pressure - 1 bar a / 14.5 psia Air intake Temperature - 20°C / 68°F Humidity - 0%(dry)

(2) Measured in free field conditions in accordance with the ISO 2151, tolerance ±3dB(A)

(3) Values multiplied x2 for duplex packages

(4) Wiring, wire sizes, and over current protective devices utilized to power the compressor should be selected and installed in accordance with all applicable local electrical codes. NEC table 430.250 can be utilized to determine wire sizing only for fixed speed compressors, however local electrical codes always take precedence and should be consulted prior to sizing and running wire to operate the compressor.

Gardner Denver policy is one of continuous improvement and we therefore reserve the right to alter specifications without prior notice.

| Gardner Denver | V01 - V04 | | | | [Eng.Rev.2] 1/6/2020 |
|---|---|---|---|---|---|
| | Technical Information Sheet | | | | |
| | Air Cooled, 60 Hz | | | | Machine Version: (B) |
| **Performance Data** | **Model** | **V01** | | **V04** | |
| **Working Pressure** | **psig** | **100** | **150** | **100** | **150** |
| Ambient temperature - min/max | **°F (°C)** | 32 to 104 (0 to 40) | | | |
| FAD (1)(3) @ max. working pressure | **cfm (m³/min)** | 6.3 (0.18) | 4.5 (0.13) | 19.5 (0.55) | 16 (0.45) |
| Total input power (when compressor is new) | **hp (kW)** | 2.3 (1.7) | 2.4 (1.8) | 6.6 (4.9) | 6.4 (4.8) |
| Total input power (after 500 operating hours) | **hp (kW)** | 2.1 (1.6) | 2.3 (1.7) | 6.2 (4.6) | 6.0 (4.5) |
| Total input power at no load | **hp (kW)** | 2.1 (1.6) | 2.3 (1.7) | 6.2 (4.6) | 6.0 (4.5) |
| **Compressor Details** | | | | | |
| Starter type | | Automatic Direct-On-Line | | | |
| Operating controls | | Hand-Off-Auto (HOA) | | | |
| Airend rotation speed | **rpm** | 1800 | | | |
| Rotor diameter | **in (mm)** | 2.44 (62) | | 3.35 (85) | |
| Stator diameter | **in (mm)** | 2.87 (73) | 2.80 (71) | 3.94 (100) | 3.82 (97) |
| Air discharge temperature (above ambient) | **°F (°C)** | 90 (32.2) | | | |
| Noise level (2) | **dB(A)** | 65 | | 72 | |
| **Electrical Data** | | ***Single phase - Direct-On-Line*** | | | |
| Nominal motor rating | **hp (kW)** | 2 (1) | | 5 (4) | |
| Electrical supply | **Voltage** | 115 / 208 / 230 | | 208 / 230 | |
| Full load current (4) @ max | **Amps** | 21.2 / 11.7 / 10.6 | | 28.0 / 25.3 | |
| Motor efficiency (at 100% Duty) | **%** | 78 | | 82.5 | |
| Starting current max. | | Approx. 6 times full load current | | | |
| Standard drive motor detail | | TEFC EISA 2007 | | | |
| Drive motor manufacturer | | Baldor | | | |
| Drive motor speed | **rpm** | 1800 | | | |
| **Electrical Data** | | ***Three phase - Direct-On-Line*** | | | |
| Nominal motor rating | **hp (kW)** | 2 (1) | | 5 (4) | |
| Electrical supply | **Voltage** | 208 / 230 / 460 | | 208 / 230 / 460 / 575 | |
| Full load current (4) @ max | **Amps** | 6.4 / 6.2 / 3.1 | | 15.8 / 14.3 / 7.2 / 5.7 | |
| Motor efficiency (at 100% Duty) | **%** | 86.5 | | 89.5 | |
| Starting current max. | | Approx. 6 times full load current | | | |
| Standard drive motor detail | | TEFC EISA 2007 | | | |
| Drive motor manufacturer | | Baldor | | | |
| Drive motor speed | **rpm** | 1800 | | | |
| **Weights and Capacities Data** | | | | | |
| Compressor oil capacity | **gal. (liters)** | 0.3 (1.14) | | 0.5 (1.89) | |
| Air outlet size | **NPT** | 1/2" | | | |
| | | | | 3/4" (100PSI Hypac only) | |
| Airend weight | **lbs (kg)** | 73 (33) | | 64 (29) | |

| **V01 Package Weights and Dimensional Data** | | | |
|---|---|---|---|
| | **Units** | **Bare Unit** | **Tripod** |
| Length | **in (mm)** | 27.4 (696) | 28.6 (727) |
| Width | **in (mm)** | 8.5 (216) | 18.5 (471) |
| Height | **in (mm)** | 10.5 (267) | 10.6 (270) |
| Weight | **lbs (kg)** | 90 (41) | 130 (59) |
| Outline Drawing | | 304HHS800 / 306HHS800 | TBD |

| **V04 Package Weights and Dimensional Data** | | | | | |
|---|---|---|---|---|---|
| | **Units** | **Bare Unit** | **80 Gallon (Vertical)** | **80 Gallon (Horizontal)** | |
| | | | | **Less Dryer** | **With Dryer** |
| Length | **in (mm)** | 35.6 (904) | 36.9 (937) | 67.1 (1704) | 65.1 (1653) |
| Width | **in (mm)** | 12.7 (323) | 27.1 (688) | 25 (635) | 31.4 (798) |
| Height (100 PSI) | **in (mm)** | 13.8 (350.5) | 65.3 (1659) | 39.1 (993) | 51.4 (1305) |
| Height (150 PSI) | **in (mm)** | | | | 49.2 (1250) |
| Weight (100 PSI) | **lbs (kg)** | 163 (74) | 394 (179) | 418 (190kg) | 584 (265) |
| Weight (150 PSI) | **lbs (kg)** | | | | 550 (249) |
| Outline Drawing | | 303HHS800 | 403HHS800 | 400HHS800 | 405HHS800 |

(1) Data measured and stated in accordance with ISO1217 4th Edition Annex C and at the following conditions

Air intake pressure - 1 bar a / 14.5 psia  Air intake Temperature - 20°C / 68°F  Humidity - 0%(dry)

(2) Measured in free field conditions in accordance with the ISO 2151, tolerance ±3dB(A)

(3) Values multiplied x2 for duplex packages

(4) Wiring, wire sizes, and over current protective devices utilized to power the compressor should be selected and installed in accordance with all applicable local electrical codes. NEC table 430.250 can be utilized to determine wire sizing only for fixed speed compressors, however local electrical codes always take precedence and should be consulted prior to sizing and running wire to operate the compressor.

Gardner Denver policy is one of continuous improvement and we therefore reserve the right to alter specifications without prior notice.

| V04 Package Weights and Dimensional Data (Continued) | | | | |
|---|---|---|---|---|
| | **Units** | **120 Gallon** | **240 Gallon** | **Duplex** |
| | | **With Dryer** | **With Dryer** | |
| Length | **in (mm)** | 69.5 (1765) | 86.1 (2187) | 76 (1930) |
| Width | **in (mm)** | 31.4 (798) | 32.9 (836) | 27.4 (696) |
| Height (100 PSI) | **in (mm)** | 56.1 (1425) | 63 (1600) | 48 (1219) |
| Height (150 PSI) | **in (mm)** | 53.7 (1364) | 60.5 (1536) | |
| Weight (100 PSI) | **lbs (kg)** | 704 (319) | 988 (448) | 845 (383) |
| Weight (150 PSI) | **lbs (kg)** | 670 (304) | 954 (433) | |
| Outline Drawing | | 406HHS800 | 407HHS800 | 400HHS800 |

(1) Data measured and stated in accordance with ISO1217 4th Edition Annex C and at the following conditions

Air intake pressure - 1 bar a / 14.5 psia Air intake Temperature - 20°C / 68°F Humidity - 0%(dry)

(2) Measured in free field conditions in accordance with the ISO 2151, tolerance ±3dB(A)

(3) Values multiplied x2 for duplex packages

(4) Wiring, wire sizes, and over current protective devices utilized to power the compressor should be selected and installed in accordance with all applicable local electrical codes. NEC table 430.250 can be utilized to determine wire sizing only for fixed speed compressors, however local electrical codes always take precedence and should be consulted prior to sizing and running wire to operate the compressor.

Gardner Denver policy is one of continuous improvement and we therefore reserve the right to alter specifications without prior notice.

| REVISIONS | | | | | |
|---|---|---|---|---|---|
| ZONE | REV | DESCRIPTION | DATE | DWN | CHK |
| | A | RELEASED PER ECN 1071095 | | | |

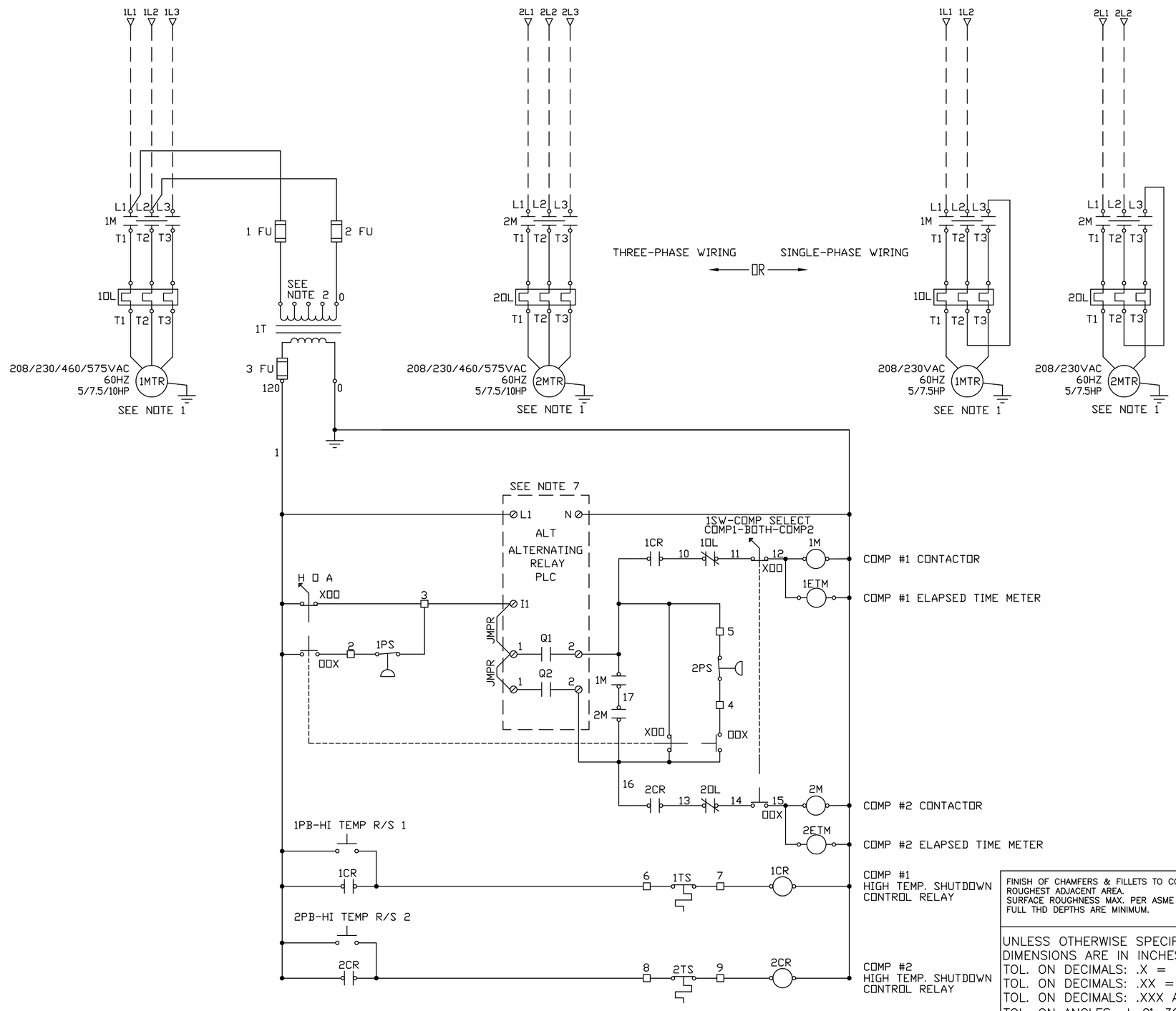


NOTES:
1) SEE MOTOR NAMEPLATE FOR HORSEPOWER AND AMPS.
2) TRANSFORMER TAPPED FOR APPROPRIATE SUPPLY VOLTAGE.
3) □ -- DENOTES TERMINAL BLOCKS.
4) 1PS SET 10 PSI HIGHER THAN 2PS.
5) BRANCH CIRCUIT PROTECTION FUSIBLE DISCONNECT OR CIRCUIT BREAKER MUST BE PROVIDED BY INSTALLER.
6) SINGLE H-O-A CONTROLS BOTH COMPRESSORS.
7) ALTERNATING RELAY PLC: EACH TIME THE INPUT (I1) GOES OFF, THE OUTPUTS (Q1 & Q2) CHANGE STATE. (ONLY ONE O/P IS ON AT A TIME)

CONTROL TERMINALS

| |
|---|
| 2 |
| 3 |
| 4 |
| 5 |
| 6 |
| 7 |
| 8 |
| 9 |
| PE |

FINISH OF CHAMFERS & FILLETS TO CONFORM TO ROUGHEST ADJACENT AREA.
SURFACE ROUGHNESS MAX. PER ASME B46.1 SPEC.
FULL THD DEPTHS ARE MINIMUM.

CONFIDENTIAL – THE INFORMATION CONTAINED IN THIS DOCUMENT IS THE PROPERTY OF GARDNER DENVER, INC. IT IS NOT FOR PUBLIC DISCLOSURE. POSSESSION OF THE INFORMATION DOES NOT CONVEY ANY RIGHT TO LOAN, SELL OR DISCLOSE THE INFORMATION. UNAUTHORIZED REPRODUCTION OR USE OF THE INFORMATION IS PROHIBITED. THIS DOCUMENT IS TO BE RETURNED TO GARDNER DENVER, INC. UPON THE COMPLETION OF THE PURPOSE FOR WHICH IT IS LOANED OR UPON REQUEST.

UNLESS OTHERWISE SPECIFIED
DIMENSIONS ARE IN INCHES
TOL. ON DECIMALS: .X = ±.05
TOL. ON DECIMALS: .XX = ±.02
TOL. ON DECIMALS: .XXX AS SPECIFIED
TOL. ON ANGLES: ± 0°–30'

DIMENSIONING AND TOLERANCING PER ASME Y14.5–2009
THREADS PER ASME B1.1 GAGING SYSTEM 21 U.O.S., ANSI B1.20.1 & B1.20.3

THIRD ANGLE PROJECTION

Gardner Denver
Gardner Denver Inc.
Quincy, IL.

HEAT TREATMENT | ENG. REF:

TITLE
# DIAGRAM–WRG
DUPLEX, FV, 1&3PH, MULTI–VOLT

| | | |
|---|---|---|
| DWN BY | MAH | 05/29/13 |
| CK'D BY | JD | 05/29/13 |

| SIZE | ENGINEERING APPROVAL | DWG NO. | REV |
|---|---|---|---|
| D | JD | 300HHD546 | A |

SCALE NTS | SHEET 1 of 1

Gardner Denver

V01–VR07 (2–10 HP) | FIXED SPEED ROTARY VANE COMPRESSORS

# V/VR Series

# The Vane Advantage

## Slow Speed Reliability

- 1760 rpm direct drive (60 Hz)
- 5–10 hp

## Configuration Flexibility

- Airend only
- Compressor and TEFC motor combination
- Tank mounted (simplex/duplex)
- hypac total systems (compressor + tank + dryer)

## Low Noise

- As low as 65 dBA

## Simple Start/Stop Controls

- Hour meter and test off auto-switch included
- No microprocessor

## Easy-to-Service

- Minimized consumable parts
- Large oil capacity & generously-sized filtration provide extended service intervals
- Spin-on/off oil filter & separator
- Easy-access air filter
- Less than 3 ppm oil carryover

## Efficient Air Generation

- Cost effective compressor
- Low energy costs

## Ideal for 100% Duty Cycle Applications

## Backed by Industry-Leading Warranty

- Standard 2-year warranty
- Industry-leading Platinum 10-year Warranty available

## Long Life & Reliability

- Fewer moving parts
- Allowing up to 100,000+ operating hours with no expensive airend change or refurbishment

# OUR COMPRESSOR TECHNOLOGY WEARS IN—NOT OUT!

The performance of a hydrovane improves over time once parts are bedded within the rotor stator unit, reducing power and energy costs.

# Configuration Flexibility

The V and VR Series compressors are engineered to meet the most stringent of specifications. Their compact, simple, robust and integrated design allows them to be fitted anywhere undercover. These units are available in airend only, compressor plus motor, tank mounted (simplex/duplex), or hypac configurations (airend, motor, tank and dryer). They are easy to install and maintain as well as extremely quiet. They are designed for a wide variety of applications including automobile, body shops, wood working, dentistry, laundry, packaging and machine tools.

## hypac

- 5–10 hp
- Tank-mounted compressor & motor with refrigerated dryer
- The total system solution
- 100–150 psi
- Up to 36.4 cfm

hypac

Duplex

## Airend or Compressor/Motor

- 5–10 hp
- Compressor and/or TEFC motor
- 100–150 psi
- Up to 36.4 cfm

## Tripod

- 2 hp
- Compressor & TEFC motor on tripod stand
- 100–150 psi
- Up to 6.3 cfm

## Simplex

- 5–10 hp
- Tank-mounted compressor & TEFC motor
- 100–150 psi
- Up to 36.4 cfm

## Duplex

- 5–10 hp
- 2 compressors/motors & tank
- Lead/Lag system evenly distributes load between compressors
- 100–150 psig
- Up to 72.8 cfm

Airend/Motor

Tripod

Simplex

# Performance Data

## V SERIES: SIMPLEX*

| HP | KW | MODEL | VOLTAGE/PHASE | PSIG | MOUNT-ING CONFIG | TANK STYLE | TANK CAP. GAL | CFM @ 100 PSIG | CFM @ 150 PSIG | NOISE LEVEL DBA | AIR OUTLET NPT | OIL CAP. GAL | DIMENSIONS IN INCHES L | W | H |
|---|---|---|---|---|---|---|---|---|---|---|---|---|---|---|---|
| 2 | 1 | V01PUTS | 115/208-230 1 Ph<br>208-230/460 3 Ph | 100/150 | Tripod | N/A | N/A | 6.3 | 4.5 | 65 | .50” | 0.3 | 28.6 | 18.5 | 10.6 |
| 5 | 4 | V04PURVS-8 | 208-230 1 Ph<br>208-230/460/575 3 Ph | 100/150 | Tank | Vert. | 80 | 19.5 | 16 | 65 | .50” | 0.5 | 36.9 | 27.1 | 65.3 |
| | | V04PURHS-8 | 208-230 1 Ph<br>208-230/460/575 3 Ph | 100/150 | Tank | Horiz. | 80 | 19.5 | 16 | 65 | .50” | 0.5 | 67.1 | 25.0 | 39.1 |
| | | V04 hypac | 208-230 1 Ph<br>208-230/460/575 3 Ph | 100<br>150 | hypac | Horiz. | 80 | 19.5<br>N/A | N/A<br>16 | 65 | .50” | 0.5 | 65.1 | 31.4 | 51.4<br>49.2 |
| | | | | 100<br>150 | hypac | Horiz. | 120 | 19.5<br>N/A | N/A<br>16 | 65 | .50” | 0.5 | 69.5 | 31.4 | 56.1<br>53.7 |
| | | | | 100<br>150 | hypac | Horiz. | 240 | 19.5<br>N/A | N/A<br>16 | 65 | .50” | 0.5 | 86.1 | 32.9 | 63.0<br>60.5 |

## V SERIES: DUPLEX*

| HP | KW | MODEL | VOLTAGE/PHASE | PSIG | MOUNT-ING CONFIG | TANK STYLE | TANK CAP. GAL | CFM @ 100 PSIG | CFM @ 150 PSIG | NOISE LEVEL DBA | AIR OUTLET NPT | OIL CAP. GAL | DIMENSIONS IN INCHES L | W | H |
|---|---|---|---|---|---|---|---|---|---|---|---|---|---|---|---|
| 5 | 4 | V04PDRHS-12 | 208-230 1 Ph<br>208-230/460/575 3 Ph | 100/150 | Tank | Horiz. | 120 | 39 | 32 | 75 | .50” | 1 | 76.0 | 27.4 | 48.0 |

## VR SERIES: SIMPLEX*

| HP | KW | MODEL | VOLTAGE/PHASE | PSIG | MOUNT-ING CONFIG | TANK STYLE | TANK CAP. GAL | CFM @ 100 PSIG | CFM @ 150 PSIG | NOISE LEVEL DBA | AIR OUTLET NPT | OIL CAP. GAL | DIMENSIONS IN INCHES L | W | H |
|---|---|---|---|---|---|---|---|---|---|---|---|---|---|---|---|
| 7.5 | 5 | VR05PURVS-8 | 208-230 1 Ph<br>208-230/460/575 3 Ph | 100/150 | Tank | Vert. | 80 | 26.3 | 22.2 | 69 | .75” | 1 | 37.3 | 27.1 | 67.3 |
| | | VR05PURHS-8 | 208-230 1 Ph<br>208-230/460/575 3 Ph | 100/150 | Tank | Horiz. | 80 | 26.3 | 22.2 | 69 | .75” | 1 | 67.1 | 25.0 | 41.1 |
| | | VR05PURHS-12 | 208-230 1 Ph<br>208-230/460/575 3 Ph | 100/150 | Tank | Horiz. | 120 | 26.3 | 22.2 | 69 | .75” | 1 | 71.5 | 27.3 | 46.6 |
| | | VR05 hypac | 208-230 1 Ph<br>208-230/460/575 3 Ph | 100<br>150 | hypac | Horiz. | 80 | 26.3<br>N/A | N/A<br>22.2 | 69 | .75” | 1 | 65.1<br>65.1 | 31.5<br>31.5 | 51.4<br>49.2 |
| | | | | 100<br>150 | hypac | Horiz. | 120 | 26.3<br>N/A | N/A<br>22.2 | 69 | .75” | 1 | 69.5<br>69.5 | 31.4<br>31.4 | 55.9<br>53.7 |
| | | | | 100<br>150 | hypac | Horiz. | 240 | 26.3<br>N/A | N/A<br>22.2 | 69 | .75” | 1 | 86.1<br>86.1 | 33.8<br>33.8 | 62.8<br>60.5 |
| 10 | 7 | VR07PURHS-8 | 208-230/460/575 3 Ph | 100/150 | Tank | Horiz. | 80 | 36.4 | 28.7 | 69 | .75” | 1 | 67.1 | 25.0 | 41.1 |
| | | VR07PURHS-12 | 208-230/460/575 3 Ph | 100/150 | Tank | Horiz. | 120 | 36.4 | 28.7 | 69 | .75” | 1 | 71.5 | 27.3 | 46.6 |
| | | VR07 hypac | 208-230/460/575 3 Ph | 100<br>150 | hypac | Horiz. | 80 | 36.4<br>N/A | N/A<br>28.7 | 69 | .75” | 1 | 65.1<br>65.1 | 31.5<br>31.5 | 62.7<br>49.2 |
| | | | | 100<br>150 | hypac | Horiz. | 120 | 36.4<br>N/A | N/A<br>28.7 | 69 | .75” | 1 | 69.5<br>69.5 | 31.4<br>31.4 | 68.7<br>53.7 |
| | | | | 100<br>150 | hypac | Horiz. | 240 | 36.4<br>N/A | N/A<br>28.7 | 69 | .75” | 1 | 86.1<br>86.1 | 33.8<br>33.8 | 75.5<br>60.5 |

## VR SERIES: DUPLEX*

| HP | KW | MODEL | VOLTAGE/PHASE | PSIG | MOUNT-ING CONFIG | TANK STYLE | TANK CAP. GAL | CFM @ 100 PSIG | CFM @ 150 PSIG | NOISE LEVEL DBA | AIR OUTLET NPT | OIL CAP. GAL | DIMENSIONS IN INCHES L | W | H |
|---|---|---|---|---|---|---|---|---|---|---|---|---|---|---|---|
| 7.5 | 5 | VR05PDRHS-12 | 208-230 1 Ph<br>208-230/460/575 3 Ph | 100/150 | Tank | Horiz. | 120 | 52.6 | 44.4 | 76 | .75” | 1 | 76.1 | 32.0 | 49.8 |
| 10 | 7 | VR07PDRHS-12 | 208-230/460/575 3 Ph | 100/150 | Tank | Horiz. | 120 | 72.8 | 57.4 | 77 | .75” | 1 | 76.1 | 32.0 | 49.8 |

*All of the above models (V/VR) include a starter.

# Rotary Vane Product Offering

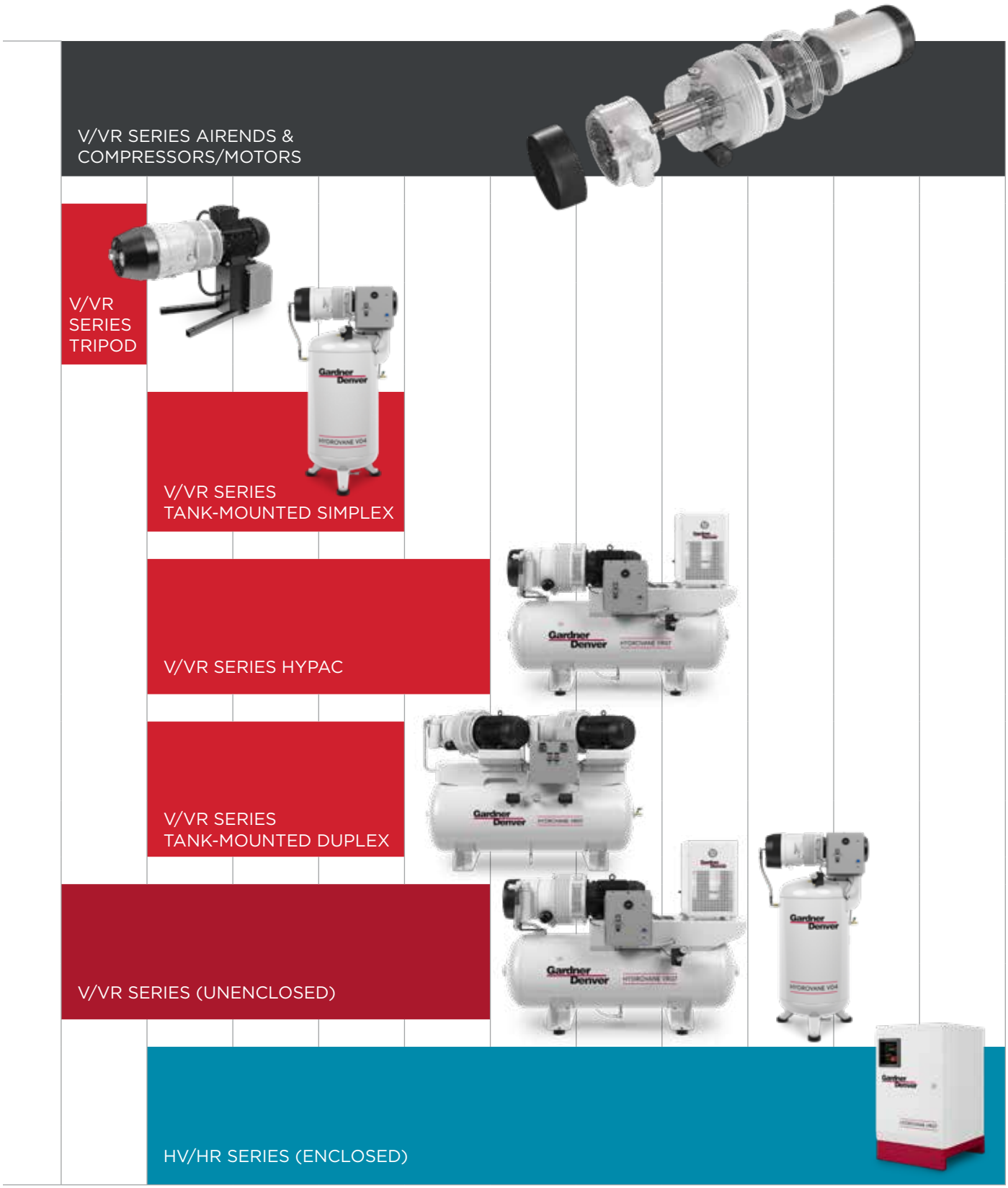


| HP | 2 | 5 | 7.5 | 10 | 15 | 20 | 25 | 30 | 40 | 50 | 60 |
|---|---|---|---|---|---|---|---|---|---|---|---|

The leader in every market we serve

by continuously improving all business processes

with a focus on innovation and velocity

**Gardner Denver, Inc.**

1800 Gardner Expressway
Quincy, IL 62305
866-615-6241
www.gardnerdenver.com/gdproducts

©2019 Gardner Denver, Inc. Printed in U.S.A.
HY-V-VR 1st Ed. 7/19
Supersedes HY-V-SERIES 4th 7/15 & HY-VR-SERIES 1st 7/15

Please recycle after use.

# V & VR SERIES SIMPLEX TANK-MOUNTED COMPRESSOR

## Operating & Service Manual

V04
VR05
VR07

13-26-604
Version 00
July 19, 2019

## MAINTAIN COMPRESSOR RELIABILITY AND PERFORMANCE WITH GENUINE GARDNER DENVER® COMPRESSOR PARTS AND SUPPORT SERVICES

Gardner Denver® Compressor genuine parts, manufactured to design tolerances, are developed for optimum dependability – specifically for Gardner Denver compressor systems. Design and material innovations are the result of years of experience with hundreds of different compressor applications. Reliability in materials and quality assurance is incorporated in our genuine replacement parts.

Your authorized Gardner Denver Compressor distributor offers all the backup you'll need. An AirSmart™ network of authorized distributors provides the finest product support in the air compressor industry.

Your authorized distributor can support your Gardner Denver air compressor with these services:

1. Trained parts specialists to assist you in selecting the correct replacement parts.
2. Factory warranted new and remanufactured rotary screw airends. Most popular model remanufactured airends are maintained in stock at the factory for purchase on an exchange basis with liberal core credit available for the replacement unit.
3. A full line of factory tested AEON™ compressor lubricants specifically formulated for use in Gardner Denver compressors.

Authorized distributor service technicians are factory trained and skilled in compressor maintenance and repair. They are ready to respond and assist you by providing fast, expert maintenance and repair services.

To Contact Gardner Denver or locate your local distributor:

Visit: www.gardnerdenver.com/gdproducts/

Or

Call: (800) 682-9868

## INSTRUCTIONS FOR ORDERING REPAIR PARTS

When ordering parts, specify Compressor MODEL, Method of Cooling, POWER and SERIAL NUMBER (see DESCRIPTION plate on unit). All orders for Parts should be placed with the nearest authorized distributor.

Order by part number and description. Reference numbers are for your convenience only

# TABLE OF CONTENTS

Maintain Compressor Reliability And Performance With Genuine Gardner Denver Compressor Parts And Support Services ..... 2

Instructions For Ordering Repair Parts ..... 2

Introduction ..... 4

Safety And Operation Precautions ..... 5

Explanation Of Safety Instruction Symbols And Decals ..... 6

Safety And Operation Precautions ..... 7

Product Information ..... 8

Installation ..... 9

Wiring Diagram Simplex, Mulit-Volt, 1 & 3 Phase ..... 12

Operation ..... 14

Initial Start Up ..... 15

Servicing ..... 16

Trouble Shooting ..... 24

Warranty ..... 25

# INTRODUCTION

## IMPORTANT!

**BEFORE INITIAL START-UP, ENSURE THAT THE COMPRESSOR OIL CHAMBER IS FILLED TO THE CORRECT LEVEL WITH GARDNER DENVER APPROVED OIL.**

### Support

Your Gardner Denver distributor is able to offer a wide range of compressors, dryers, filters, and ancillary air-line system products. They are fully trained and competent in all aspects of compressor and air-system maintenance. If you need any specialist help or service, please contact your distributor providing the MODEL, TYPE and SERIAL NUMBER.

### Customer Standard Warranty Terms

All Gardner Denver compressors, which are serviced by an authorized Gardner Denver distributor, are guaranteed for twelve months from the date of commissioning or eighteen months ex works, whichever occurs first.

The warranties excludes normal service parts, oil and wear items, dirt ingress, cleaning of filters and fluid drain devices and the tightening of electrical or other connections. Also excluded is the adjustment of pressure switches or the adjustment of any other control device shown in this handbook.

Consequential damage of any nature is not covered by the warranty.

### Product Development

Gardner Denver adapts a policy of continual product development. The information in this handbook, while fully up to date when issued, may be subject to change without notice.

### Product Terminology

| | |
|---|---|
| V, VR | Vane |
| 04, 05, 07 | kW Motor |
| PURHS | Packaged Unit, Receiver, Horizontal, Starter |
| PURVS | Packaged Unit, Receiver, Vertical, Starter |

## SAFETY AND OPERATION PRECAUTIONS

**⚠WARNING**

**THIS MANUAL CONTAINS IMPORTANT SAFETY INFORMATIN AND SHOULD ALWAYS BE AVAILABLE TO THOSE PERSONNEL OPERATING THIS UNIT.**

**READ, UNDERSTAND AND RETAIN ALL INSTRUCTIONS BEFORE OPERATING THIS EQUIPMENT TO PREVENT INJURY OR EQUIPMENT DAMAGE.**

Because an air compressor is a piece of machinery with moving and rotating parts, the same precautions should be observed as with any piece of machinery of this type where carelessness in operation or maintenance is hazardous to personnel. In addition to the many obvious safety rules that should be followed with this type of machinery, the additional safety precautions as listed below must be observed:

1. Read all instructions completely before operating air compressor or unit.
2. For installation, follow all local electrical and safety codes, as well as the National Electrical Code (NEC) and the Occupational Safety and Health Act (OSHA).
3. Electric motors must be securely and adequately grounded. This can be accomplished by wiring with a grounded, metal-clad raceway system to the starter; by using a separate ground wire connected to the bare metal of the motor frame; or other suitable means.
4. Protect the power cable from coming in contact with sharp objects. Do not kink power cable and never allow the cable to come in contact with oil, grease, hot surfaces, or chemicals.
5. Make certain that the power source conforms to the requirements of your equipment.
6. Pull main electrical disconnect switch and disconnect any separate control lines, if used, before attempting to work or perform maintenance on the air compressor or unit. "Tag Out" or "Lock Out" all power sources.
7. Do not attempt to remove any compressor parts without first relieving the entire system of pressure.
8. Do not attempt to service any part while machine is in an operational mode.
9. Do not operate the compressor at pressures in excess of its rating.
10. Do not operate compressor at speeds in excess of its rating.
11. Periodically check all safety devices for proper operation. Do not change pressure setting or restrict operation in any way.
12. Be sure no tools, or rags or loose parts are left on the compressor or drive parts.
13. Do not use flammable solvents for cleaning the air inlet filter or element and other parts.
14. Exercise cleanliness during maintenance and when making repairs. Keep dirt away from parts by covering parts and exposed openings with clean cloth or Kraft paper.
15. Do not operate the compressor without guards, shields and screens in place.
16. Do not install a shut-off valve in the discharge line, unless a pressure relief valve, of proper design and size, is installed in the line between the compressor unit and shut-off valve.
17. Do not operate compressor in areas where there is a possibility of ingesting flammable or toxic fumes.
18. Be careful when touching the exterior of a recently run motor - it may be hot enough to be painful or cause injury. With modern motors this condition is normal if operated at rated load - modern motors are built to operate at higher temperatures.
19. Inspect unit daily to observe and correct any unsafe operating conditions found.
20. Do not "play around" with compressed air, nor direct air stream at body, because this can cause injuries.
21. Compressed air from this machine absolutely must not be used for food processing or breathing air without adequate downstream filters, purifiers and controls.
22. Always use an air pressure regulating device at the point of use, and do not use air pressure greater than marked maximum pressure of attachment.
23. Check hoses for weak or worn condition before each use and make certain that all connections are secure.
24. Always wear safety glasses when using a compressed air blow gun.

The user of any air compressor package manufactured by Gardner Denver is hereby warned that failure to follow the preceding Safety and Operation Precautions can result in injuries or equipment damage. However, Gardner Denver does not state as fact or does not mean to imply that the preceding list of Safety and Operating Precautions is all inclusive, and further that the observance of this list will prevent all injuries or equipment damage.

## EXPLANATION OF SAFETY INSTRUCTION SYMBOLS AND DECALS

| |
|---|
| **⚠ DANGER** |
| **Indicates immediate hazards which will result in severe injury or death.** |

| |
|---|
| **⚠ WARNING** |
| **Indicates hazards or unsafe practice which could result in severe injury or death.** |

**Risk of electric shock.**

**Risk of danger.**

**Risk of hot surface.**

**Eye protection must be worn.**

**Dust protection must be worn.**

**Warning pressurized vessel.**

**Warning pressurized component or system.**

**Warning unit is remotely controlled and may start without warning.**

**Read the instruction manual.**

**Do not operate the machine without the guard.**

**Warning! Do not start the machine without consulting handbook.**

**Lifting point.**

**Direction of rotation.**

| |
|---|
| **⚠ CAUTION** |
| **Indicates hazards or unsafe practice which could result in damage to the Gardner Denver compressor or minor injury.** |

| |
|---|
| **NOTICE** |
| **Notice is used to notify people of installation, operation or maintenance information which is important but not hazard-related.** |

## SAFETY AND OPERATION PRECAUTIONS

**OBSERVE, UNDERSTAND AND RETAIN THE INFORMATION GIVEN IN THE SAFETY PRECAUTION DECALS AS SHOWN IN THE PARTS LIST SECTION**

**⚠ DANGER**

**This compressor must not be used for breathing air. To do so will cause serious injury, whether air is supplied direct from the compressor source or to breathing tanks for later use. Any and all liabilities for damage or loss due to injury, death and/or property damage including consequential damages stemming from the use of this compressor to supply breathing air, will be disclaimed by the manufacturer.**

**⚠ WARNING**

**The use of this compressor as a booster pump and/or to compress a medium other than atmospheric air is strictly non-approved and can result in equipment damage and/or injury.**

**⚠ CAUTION**

**This unit may be equipped with special options which may not be included in this manual. User must read, understand and retain all information sent with special options.**

**NOTICE**

**Gardner Denver declines all liability in the event of material damage or bodily injury resulting from negligence in the application of these precautions, from non-observation or lack of elementary supervision in respect of handling, operation, servicing or repair, even if not expressly stated in this instruction notice.**

# PRODUCT INFORMATION

### Operating Temperatures

Your compressor is designed to give optimum performance and trouble free service life when the oil temperature is between 167-185°F (75-85°C).

Certain operating conditions sustained over a period of time may cause problems that affect the performance and reliability of this compressor.

Problems may occur when compressors run for short periods on low air demand where they don't reach normal operating temperatures.

Prolonged use under these conditions can cause condensation build up within the compressor and may eventually lead to emulsification of the oil.

Normal operating temperatures are reached in typically 10-15 minutes, to purge condensate from the compressor a longer running period with high air demand, usually 60 minutes, will be required.

Conditions or applications which prevent the compressor temperature from stabilizing between parameters should be avoided.

Consult your local distributor or the factory if you have any particular concerns about operational characteristics of your compressor.

## High Operating Temperatures

If your compressor frequently operates in high ambient temperatures, the oil life will be reduced.

Some of the reasons for high compressor oil temperatures are:

- Low oil level.
- Blocked oil cooler or cooler flow restrictions.
- Wrong type or grade oil.
- High ambient temperature.

**Note**: Compressor will stop automatically if temperature rises above 230°F (110°C).

## Noise Level

The compressor should be positioned where noise will not be a problem. We recommend the use of ear protection when near the compressor for extended periods.

## INSTALLATION

| |
|---|
| **⚠WARNING** |
| **Do not operate unit if damaged during shipping, handling or use. Operating unit if damaged may result in injury.** |

### Introduction

Ensure all lifting equipment and means of transportation are securely located and rated to accept the full load. Inspect all lifting equipment for signs of wear. Do not use if wear is evident.

### Lifting and Handling (Figure 1)

Before transporting, secure the compressor to a suitable pallet. Use a fork lift or pallet truck to transport the compressor.

A suitable lifting platform will be required when positioning the compressor. For normal lifting a hoist may be used.

Lift the compressor and place it in the desired location.

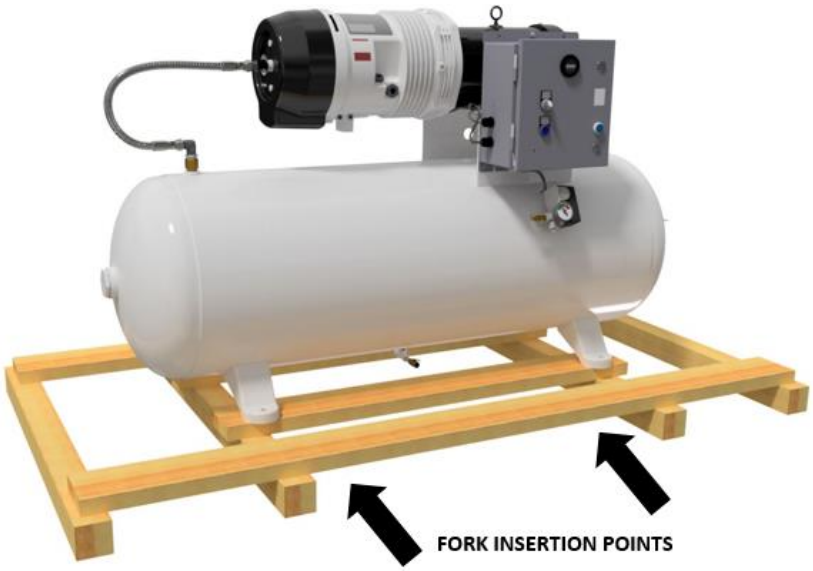


**Figure 1 – Lifting and Handling**

### Position Your Compressor

We recommend an approved installation from an authorized Gardner Denver distributor with a service agreement to maintain your compressor.

Position the compressor in a room of adequate size on a firm surface, level in both planes within five degrees of the horizontal.

Ensure the area has sufficient load-bearing capacity; normally it is not necessary to bolt the unit down.

Sufficient access (3.3ft/1meter) for all routine service procedures should be provided all around and above the unit.

Site the compressor away from sources of dirt, coarse solids, abrasive particles, steam, liquids and gaseous impurities. If is recommended that a compressor used for painting be located in a separate room from that area where body sanding and painting are done.

This is an industrial compressor and is intended for installation in an indoor environment.

## **Ventilation (**FIGURE 2**)**

Position the compressor in a well ventilated location. Do not restrict the air-flow around the compressor or allow the hot air discharge to re-circulate into the compressor intake.

Any cooling-air inlet (A) should be positioned low allowing unrestricted air-flow to the compressor intake. The warm-air outlet (B) should be positioned high and well away from the inlet, to ensure a positive cooling air-flow through the compressor.

For maximum efficiency and reliability, the compressor should be operated in a moderate ambient temperature. If temperatures fall below 32°F (0°C), consult your Gardner Denver distributor. A different grade of oil may be required.

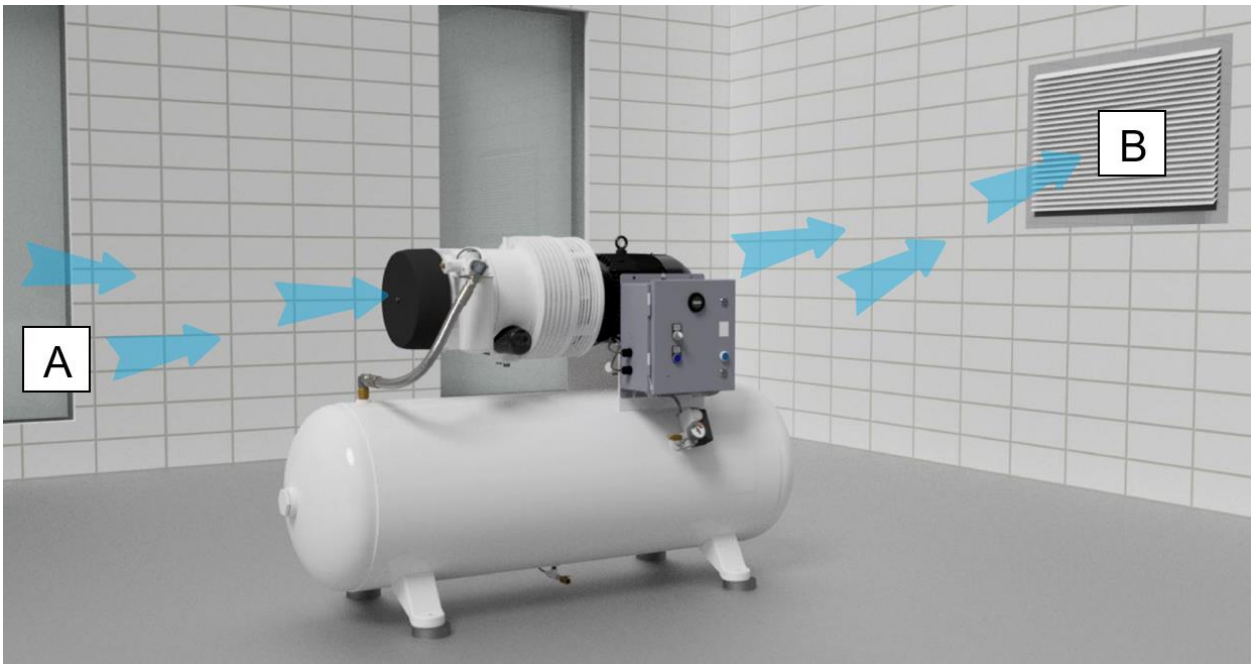


**FIGURE 2 - VENTILATION**

| |
|---|
| **DANGER** |
| **Do not install isolating valves between compressor outlet and air receiver. This will cause excessive pressure if valve is closed, and cause injury and equipment damage.** |

| |
|---|
| **WARNING** |
| **Always use an air pressure regulating device at the point of use. Failure to do so can result in injury or equipment damage.** |

## Electrical Connections

**WARNING**

**Connection to, or installation of, an electrical power supply must only be carried out by authorized and qualified electricians. They must fully understand and adopt correct and safe working practices. All aspects of the installation must meet the wiring regulations presently in place.**

It is essential that the power supply and the supply wiring are adequately sized and that the voltage correspond to the unit specifications.

**NOTICE**

**Upstream protection fusible disconnect or circuit breaker must be provided by installer.**

Before connecting to the main electrical supply ensure that the system can sustain the additional electrical load. To ensure reliable low resistance joints, make sure that your incoming supply cables are firmly secured to the starter terminals and that they are of the correct cross sectional area.

Refer to starter and circuit diagrams before starting work.

**TABLE GIVES RECOMMENDED WIRE SIZE BASED ON NEC CODE**

| WIRE SIZE (AWG) – 75°C COPPER – 40°C AMBIENT | | | | | | |
|---|---|---|---|---|---|---|
| MOTOR HP | 3 PHASE | | | 1 PHASE | | |
| | 200/208V | 230V | 460/575V | 115V | 208V | 230V |
| 5 | 12 | 12 | 14 | --- | 8 | 8 |
| 7.5 | 8 | 8 | 12 | --- | 8 | 8 |
| 10 | 8 | 8 | 12 | --- | --- | --- |

**Note:** Wire sizes specified are the minimum size to suit typical installation. If the compressor is located a long way away from the disconnect or the ambient temperature normally exceeds 40°C (104°F). Then wire size may need to be increased. Refer to National Electrical Code.

All models require a properly size magnetic start as specified in the National Electric Code (NEC).
See simplex wiring diagrams on following pages.

# WIRING DIAGRAM, SIMPLEX, 5 & 7.5 HP, MULTI-VOLT, 1 PHASE

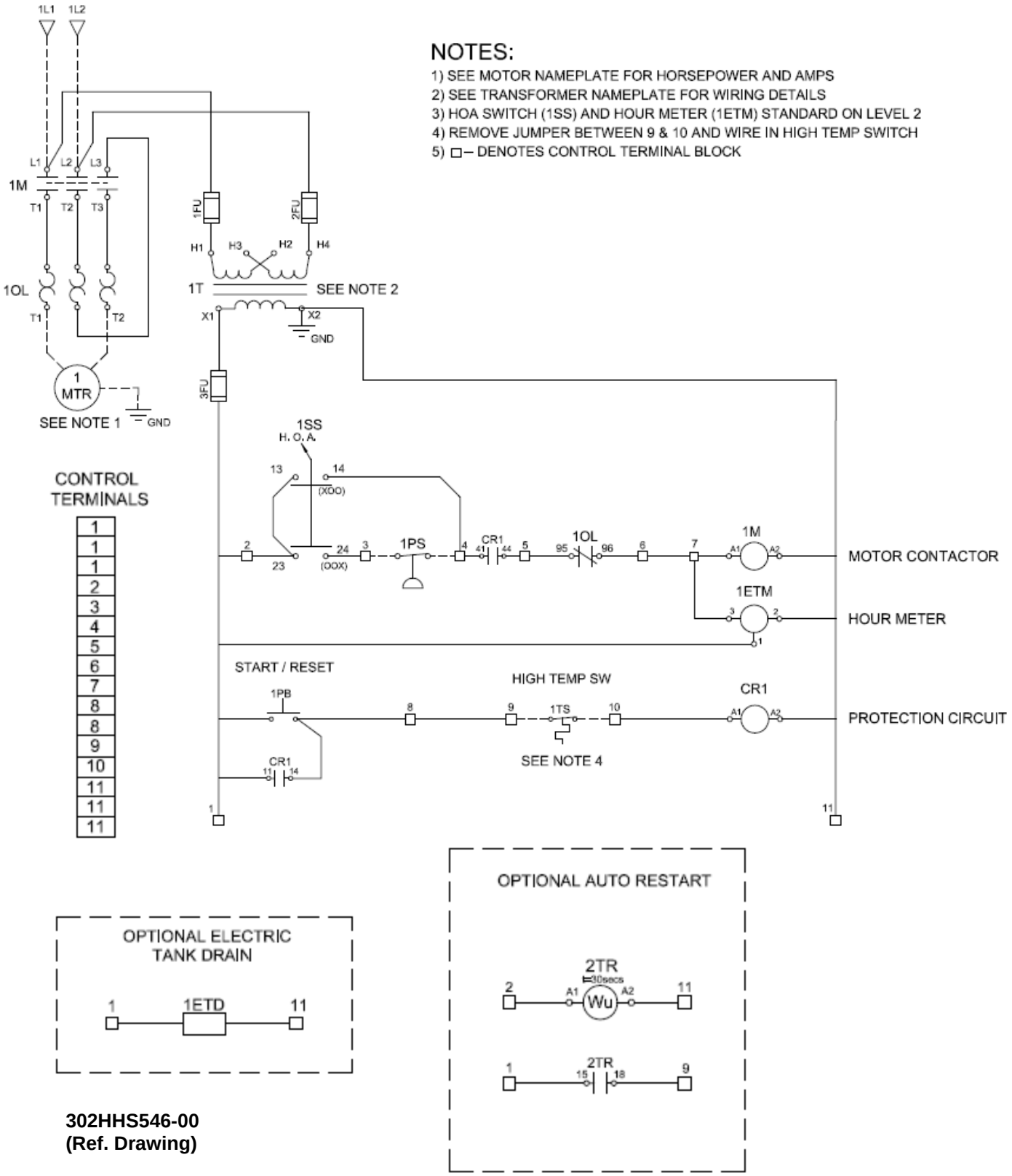


**302HHS546-00**
**(Ref. Drawing)**

## WIRING DIAGRAM, SIMPLEX, 5 – 10 HP, MULTI-VOLT, 3 PHASE

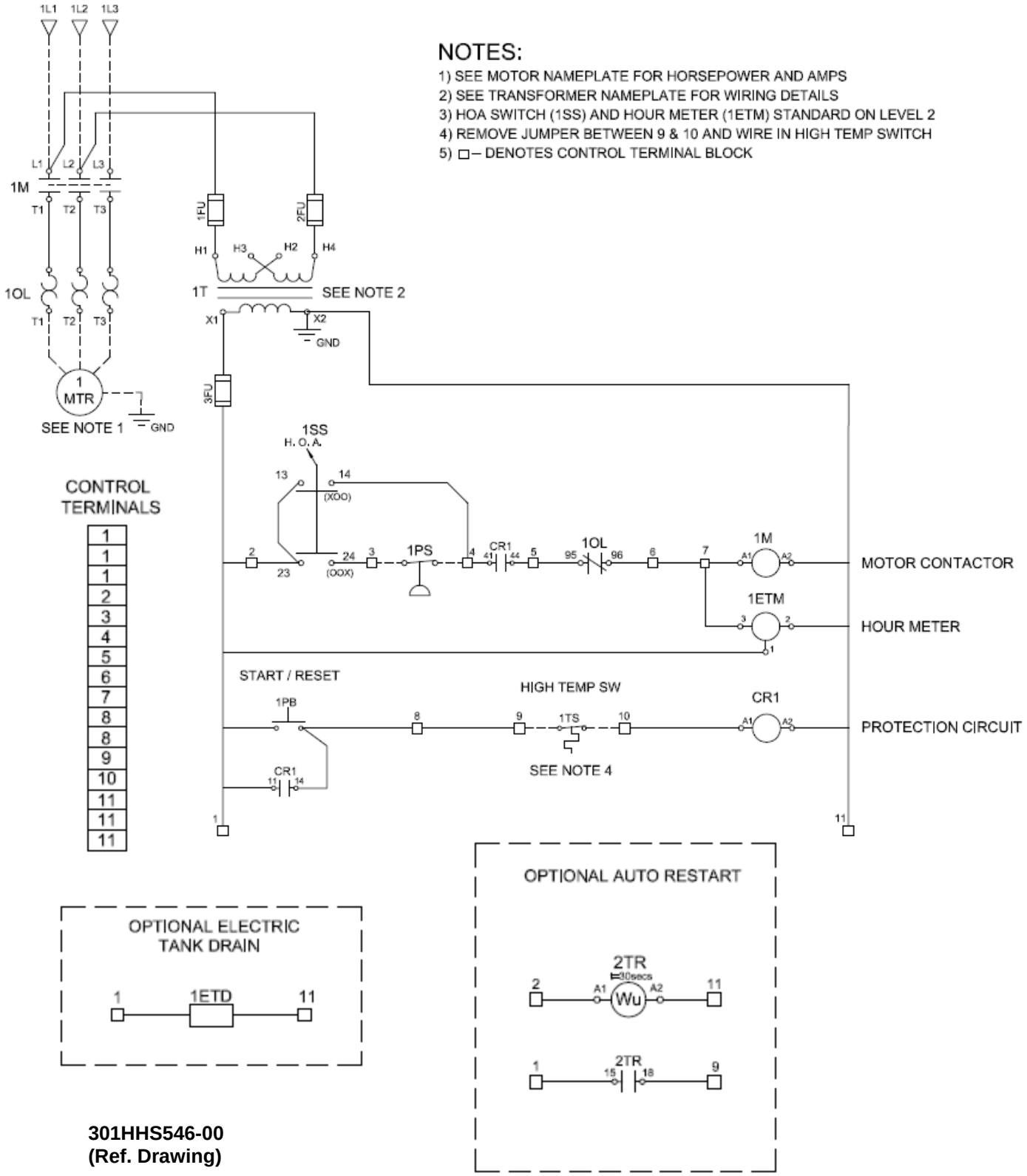


**301HHS546-00**
**(Ref. Drawing)**

## AIR LINE PIPING

Connection to air system should be of the same size, or larger, than discharge pipe out of unit. A union connection to the unit and water drop leg is recommended. Install a flexible connector between the discharge of the unit and the plant air piping. Plant air piping should be periodically inspected for leaks using a soap and water for detection on all pipe joints. Air leaks waste energy and are expensive.

## OPERATION

See Figure 3.

This compressor has been inspected, thoroughly tested and approved at the factory. For this unit to give long satisfactory service, it must be installed and operated properly.

The compressor assembly comprises an air-end (A), complete with oil cooler (B), driven by an electric motor (C). This assembly is mounted on a receiver (D).

The receiver is equipped with a pressure switch (E), pressure relief valve (F), pressure gauge (G), moisture drain (H), and service valve (K) The starter (L), includes hour meter (U), hand-off-auto selector switch (Q), and hi temp reset (R).

Air enters the compressor through the air filter cover (M). The air is compressed with the air end pressure displayed by pressure gauge (N). It is then discharged through discharge hose (P) and check valve (J) into the receiver.

Simplex units have a pressure switch that senses changes in receiver pressure and automatically starts and stops the compressor at preset pressure limits. If the receiver pressure falls below the cut-in pressure setting of the pressure switch the compressor will run until the cut-out pressure setting of the pressure switch has been reached.

Start/Stop Mode: Compressor will automatically start and stop in response to air receiver pressure. Control panel is furnished with Hand-Off-Auto selector switch for selecting continuous run (HAND) mode or the Start/Stop (AUTO) Mode.

Continuous Run Mode: Compressor will continue to operate regardless of receiver pressure, supplying air from zero to full flow.

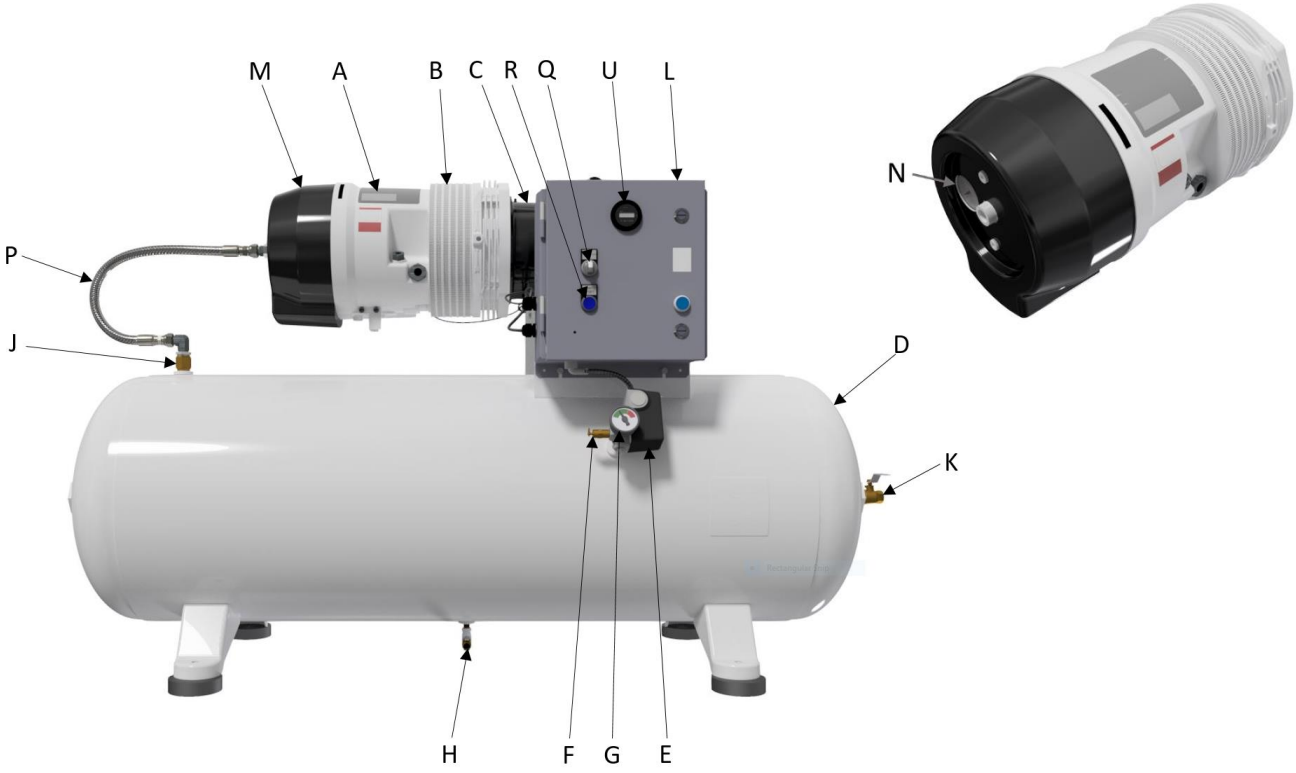


**Figure 3**

## INITIAL START UP

1. Inspect unit for any visible signs of damage that would have occurred in shipment or during installation.

2. Pull main disconnect switch to unit to assure that no power is coming into the unit. “Lock Out” or “Tag Out” switch. Connect power leads to start.

| |
|---|
| **WARNING** |
| **Do not attempt to operate compressor on voltage other than that specified on order on compressor motor.** |

3. Check compressor oil level. Add oil as required.
   **Note**: Do not mix oil type, weights or brands.

4. Activate main disconnect switch.

5. Select Automatic or Hand-Off-Auto Selector switch.

6. Push “Start/Stop” button on control panel.

7. Check for correct rotation. The correct direction of rotation is clockwise when viewed from the drive end (motor end). If rotation is wrong, reverse any two incoming power connections to the starter.

8. Close receiver outlet valve and start.

9. With receiver valve closed, let machine pump up to operating pressure. At this stage the automatic controls will take over. Check for proper cycling operation.

10. When the initial run period has shown no operating problems, shut unit down and recheck oil level.

11. Open receiver hand valve. The air compressor unit is now ready for use.

| |
|---|
| **WARNING** |
| **This unit can start automatically without warning.** |

## SERVICING

### Introduction

**WARNING**

**Servicing of the compressor must only be carried-out by authorized persons fully trained and competent in the maintenance of Gardner Denver compressors. They must fully understand and adopt correct and safe working practices.**

**WARNING**

**Before performing any maintenance function, switch main disconnect switch to "OFF" position to assure no power is entering unit. "Lock Out" or "Tag Out" all sources of power. Be sure all air pressure is relieved. Failure to do so may result in injury or equipment damage.**

If you are unable to carry-out the work safely in the required manner then your Gardner Denver distributor will be pleased to help.

Use genuine parts and approved Gardner Denver oil during routine servicing; the following service kits are available:

### Routine Service Schedule

The work listed below must be carried-out at the indicated running-hours which must be regarded as a maximum. In dusty, hot or humid conditions more frequent servicing may be necessary.

This section shows the minimum service requirements for your compressor. To ensure that the full compressor maintenance program is carried out, Gardner Denver recommends that your compressor is regularly serviced by an authorized Gardner Denver distributor.

### Checking Operation of the Compressor

Wait until air-end vent down cycle is complete.

Check that the air-end pressure gauge reads zero.

Assuming the compressor is serviced correctly the machine is capable of operating in ambient temperatures up to a maximum of 104°F (40°C). At this ambient the bulk oil temperature measured at the filler plug should be 158-194°F (70-90°C).

Check oil temperature. When the compressor is working the temperature should be:

| | |
|---|---|
| Initial start-up and warm-up period | <158°F (70°C) |
| Optimum working temperature | 167-185°F (75-85°C) |
| High temperature | 194-212°F (90-100°C) |
| Stop! See fault finding section | >212°F (100°C) |

### Check Air Line Pressure

Check the air-line system pressure by using the receiver mounted pressure gauge.

### Check Air-End Pressure

To check the air-end pressure, use the pressure gauge located in the air-end.

### Check Oil Level

Check that the air-end pressure gauge reads zero.

Remove filler plug and check inside oil chamber.

Oil should be filled to overflow, if not top up (See Figure 5).

### Drain Air Receiver (FIGURE 4)

Wait for air-end vent down cycle to finish.

Position suitable container beneath condensate drain valve (B).

| |
|---|
| **WARNING** |
| **The air receiver is pressurized; take great care when carrying out the next operation.** |

Carefully open drain valve and allow pressure to fall slowly to zero.
Collect all condensate drained from receiver.

Note: Condensate may contain traces of oil and must be disposed of in an approved manner.

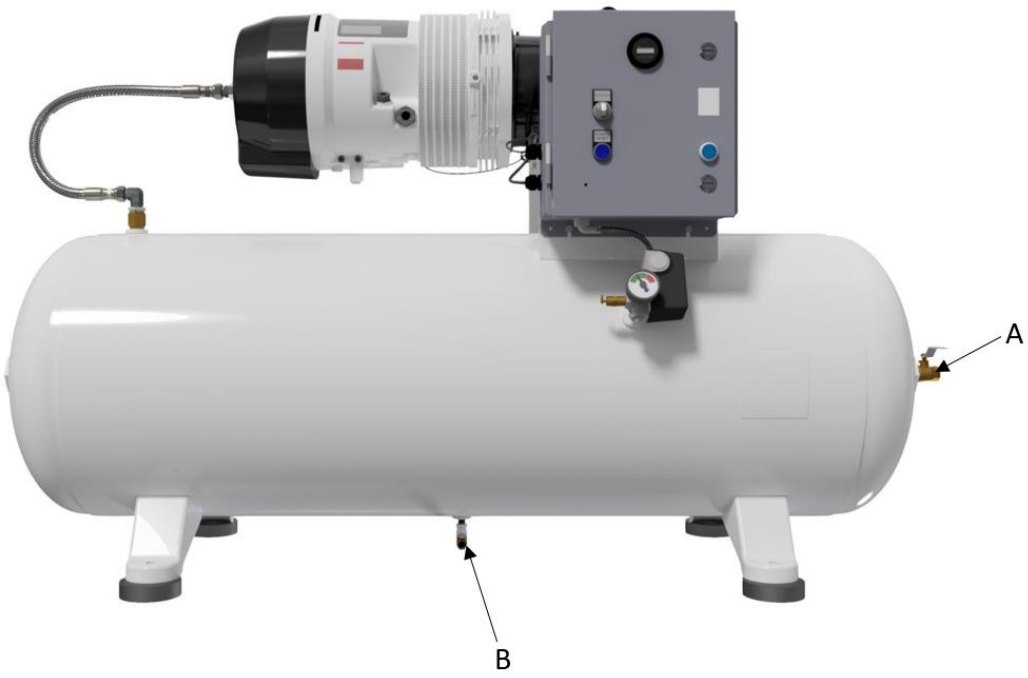


**FIGURE 4 – OUTLET DRAIN VALVE LOCATION**

Close drain valve (B) and open air outlet valve (A).

**WARNING**

**Before performing any maintenance function, switch main disconnect switch to "OFF" position to assure no power is entering unit. "Lock Out" or "Tag-Out" all sources of power. Be sure all air pressure in the unit is relieved. Failure to do this may result in injury or equipment damage.**

**CLOSE THE AIR OUTLET VALVE TO ISOLATE THE COMPRESSOR FROM THE AIR-LINE SYSTEM. FIT A SAFETY NOTICE TO THE VALVE ADVISING THAT IT IS NOT TO BE OPENED.**

**DO NOT PROCEED UNTIL GAUGE READS ZERO!**

## Oil Top-Up Procedure (FIGURE 5)

Wait until the air-end vent down cycle is complete, check that the air-end pressure gauge reads zero.

**Note:** If pressure gauge does not fall to zero, then non-return valve (D) may be faulty.

Drain air receiver following procedure above. Do not re-open air-outlet valve (A).

Carefully unscrew and remove oil filler plug (B), and retain bonded seal (C).

Fill compressor to overflow with approved Gardner Denver oil, do not overfill.

**Note:** Do not mix oil type, weights or brands.

Examine bonded seal, if not damaged refit to filler plug.

Refit seal and filler plug, tighten to 18 ft.-lbs.

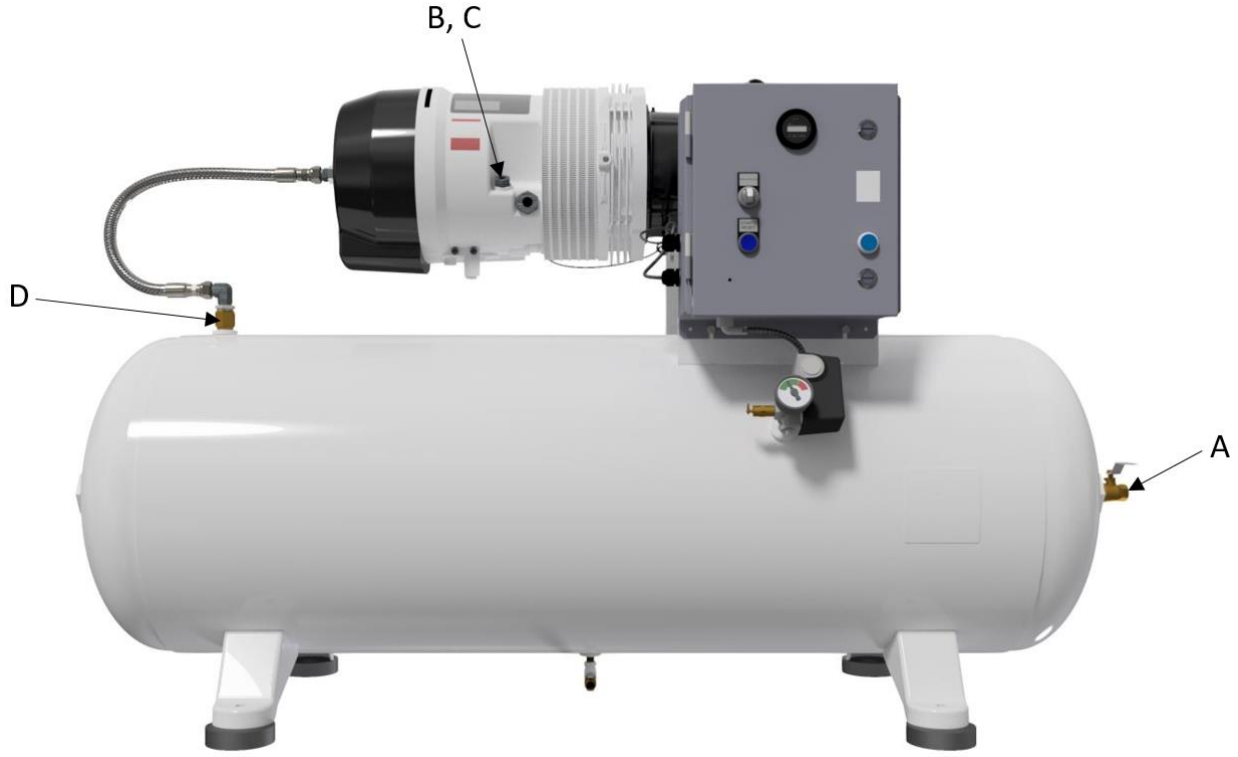


**FIGURE 5 – OUTLET AND FILLER PLUG LOCATION**

## Check Air Intake Filter (FIGURE 6)

**⚠WARNING**

The air filter is located beneath the filter cover (A).

Wait until air-end vent down cycle is complete.

Open test valve to vent pressure from the receiver and associated pipework.

Check that air-end pressure gauge reads zero.

Disconnect hose (B).

Firmly pull filter cover (A) to remove from separator casing.

Remove air filter.

Clean separator casing and inside of filter cover.

Vacuum clean or blow dust out of filter using low pressure, clean dry air. Replace the filter if it cannot be cleaned satisfactorily.

Install air filter, install filter cover (A), reconnect hose (B).

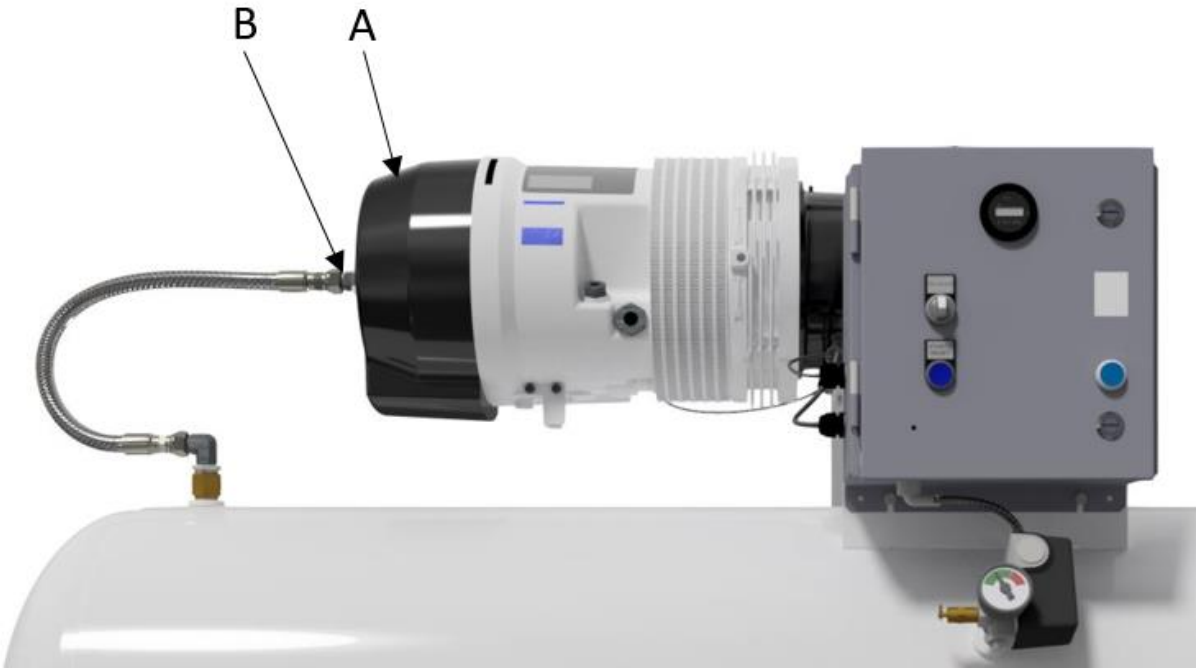


**FIGURE 6 – AIR INTAKE FILTER**

## Clean cooler and motor (FIGURE 7)

**⚠WARNING**

Carefully vacuum clean the oil cooler matrix (A), aftercooler if fitted and guard rings (B).

Vacuum clean and blow dust from motor (C) and motor grill, using low pressure, clean dry air.

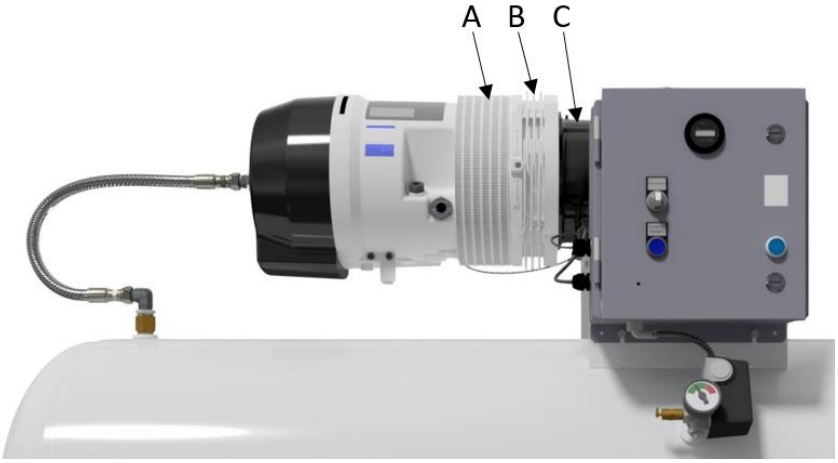


**FIGURE 7 – COOLER AND MOTOR LOCATION**

## Replace Oil Separator Element (FIGURE 8)

Remove screws (A); gently tap the end cover (B) until it is clear of the separator casing.

Unscrew the oil separator element (C) and discard.

**Note:** Oil separator element contains oil and must be disposed of in an approved manner.

Install a new separator element. Ensure that the O-Ring (E) is in place. Tighten by hand only.

Install end cover (B). Ensure cover is positioned correctly and bolt holes are in line. Be careful not to damage O-Ring (D) when installing.

Install screws (A). Tighten to 8 ft.-lbs.

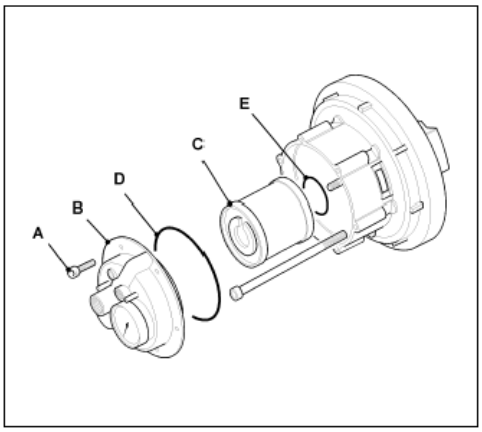


**FIGURE 8 – SEPARATOR ELEMENT LOCATION**

## Oil Change Procedure (FIGURE 9)

Remove filler plug (A), discard bonded seal (B), place container, at least 1.0 Liter capacity, beneath oil drain plug (C) or (D).

Carefully remove drain plug (C) or (D) and discard bonded seal (E). Collect all the oil that drains from the compressor. **Note:** Any waste oil collected must be disposed of in an approved manner.

Refit drain plug (C) or (D) using a new bonded seal (E). Tighten to 27 ft.-lbs.
Refit filler plug (A) using a new bonded seal (B).

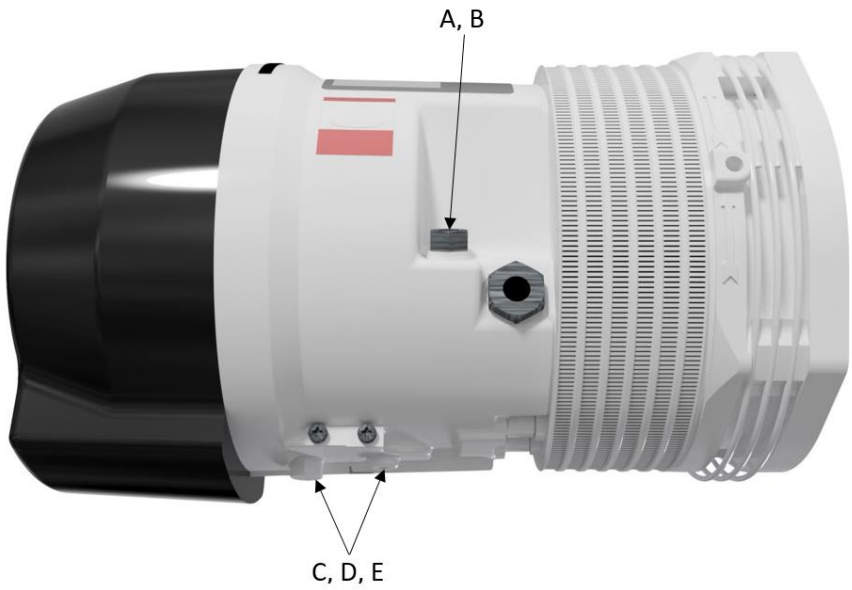


**FIGURE 9 – OIL CHANGE PROCEDURE**

## Electrical Checks

**WARNING**

Remove the starter panel and pressure switch covers.

Check for any signs of overheating and ensure that all electrical connections are tightened to correct torque settings.

**Note:** Pay special attention to power connections and cables connected to contactors and incoming terminals.

## Check electric motors

**WARNING**

Remove any dust or dirt from motor bodies and motor air intake grills.

Lubricate motor bearings as per manufacturer's instructions.

Install all covers, remove safety notices, turn electrical supply on and open air-outlet valve. Test run compressor, check pressure and inspect for oil leaks.

## Servicing Requirements

The following preventive maintenance charts cover all Gardner Denver compressors using Gardner Denver oil.

The work to be carried out must be done on or before the hours shown for this action, or every 12 months, whichever occurs first.

Table 9.1 for 4000 hour oil change are shown in entirety, shaded items are Gardner Denver distributor maintenance tasks only.

**NOTE:** Certain items may not be applicable to all units.

## READ HEALTH AND SAFETY PRECAUTIONS BEFORE STARTING ANY WORK.

## Service Schedule: Gardner Denver Oil

For normal ambient conditions, the oil temperature should not exceed 90°C (194°F)

If the oil is working above this temperature, the oil life will be significantly reduced.

The service life of the air filter is indication only. Actual life durability will depend on the operating conditions.

## GENERAL MAINTENANCE NOTES

**PRESSURE RELIEF VALVE:** The pressure relief valve is an automatic pop valve. Each valve is properly adjusted for the maximum pressure of the unit on which it is installed. If it should pop, it will be necessary to drain all the air out of the tank in order to reseat properly, or drop pressure in line. Do not readjust.

**TANK DRAIN VALVE:** Drain valve is located at bottom of tank. Open drain valve daily to drain condensation. Do not open drain valve if tank pressure exceeds 25 PSIG. The automatic tank drain equipped compressor requires draining manually once a week.

**PRESSURE SWITCH:** The pressure switch is automatic and will start compressor at the low pressure and stop when the maximum pressure is reached. It is adjusted to start and stop compressor at the proper pressure for the unit on which it is installed. Do not readjust.

**CHECK VALVE:** The check valve closes when the compressor stops operating, preventing air from flowing out of the tank through the pressure release. After the compressor stops operating, if air continues to escape through the release valve, it is an indication that the check valve is leaking. This can be corrected by removing check valve and cleaning disc and seat. If check valve is worn badly, replace same.

| ⚠ WARNING |
| --- |
| **Before removing check valve be sure all air is drained out of tank and power is disconnected. Failure to do so may result in injury or equipment damage.** |

**MOTOR LUBRICATION:** Long time satisfactory operation of an electric motor depends in large measure on proper lubrication of the bearings. Bearing grease will lose its lubricating ability overtime, not suddenly. Refer to the motor manufacturer's instructions for the type of grease and lubrication intervals.

| Table 9.1 Service Schedule | | | | | |
|---|---|---|---|---|---|
| Maintenance Actions | Install | Every Day | Every Week | Every 4,000 Hours | Every 20,000 Hours |
| Site-sufficient access for service | X | | | | |
| Site-protected from weather | X | | | | |
| Site-adequate ventilation | X | X | X | X | X |
| Site-ambient temperature within limit | X | X | X | X | X |
| Site-dust free ambient | X | X | X | X | X |
| Check/torque electrical connection | X | | | X | X |
| Check oil level at filter plug/sight glass | X | X | X | X | X |
| Check correct drive rotation | X | | | | X |
| Check for air leaks | X | | X | X | X |
| Check for oil leaks | X | | X | X | X |
| Check air intake filter (clean if necessary) | X | | X | | |
| Check power on-load | X | | | X | X |
| Check power off-load | X | | | X | X |
| Check oil temperature | X | | X | X | X |
| Check RSU temperature | X | | X | X | X |
| Check servo pressure off-load | X | | | X | X |
| Check motor gland/cables secure | X | | | X | X |
| Check motor for damage | X | | | X | X |
| Check motor/starter for loose connections | X | | | X | X |
| Check motor cables and earth | X | | | X | X |
| Check motor for vibration | X | | | X | X |
| Check flexible oil pipes | | | | X | |
| Check oil seal for leakage | | | | X | |
| Check drive media/key | | | | X | |
| Check starter contactors | | | | X | |
| Check motor insulation resistance | | | | | X |
| Check combi cooler matrix | | | X | X | X |
| Clean any external dirt from compressor | X | | X | X | X |
| Clean any external dirt from motor | X | | X | X | X |
| Clean solenoids | | | | | |
| Change separator element | | | | X | X |
| Change 4,000 hour oil | | | | X | X |
| Change oil filter (if applicable) | | | | X | X |
| Change air intake filter | | | | X | X |
| Change unloader valve seals | | | | X | X |
| Change MPV seals | | | | X | X |
| Change vacuum valve seals | | | | X | X |
| Change flexible pipes | | | | X | X |
| Change thermal motor | | | | X | X |
| Grease motor bearings (if applicable) | | | | X | |
| Full air end inspection (internal) | | | | | X |
| Clean servo filter | | | | | X |
| Change drive media/key | | | | | X |
| Change oil seal | | | | | X |
| Change pressure gauge | | | | | X |
| Change motor bearings | | | | | X |
| Full operational test/check | X | | | X | X |

## TROUBLE SHOOTING

| | |
|---|---|
| ⚠WARNING | **Always disconnect unit from power supply and relieve all pressure from air tank before performing any maintenance. Failure to do so may result in equipment damage or injury. Always "Lock Out" or "Tag Out" all power sources.**<br>**Never operate unit without belt guard in place.**<br>**Never use gasoline or flammable solvent on or around compressor unit. Explosion may result.** |

**Servicing of the compressor must only be carried-out by authorized persons fully trained and competent in the maintenance of Gardner Denver compressors. They must fully understand and adopt correct and safe working practices.**

| Symptom | Possible Cause(s) | Corrective Action |
|---|---|---|
| **High Pressure**<br>Air-end pressure gauge reads high<br>Air receiver pressure gauge reads high.<br>Air-end pressure relief valve blowing.<br>High temperature, high power, low air output. | Safety valve setting too high.<br>Pressure control valve stuck.<br>MPV not operating correctly.<br>Blocked pressure control valve or filter.<br>Pressure switch faulty. | Check that air-end pressure gauge returns to ZERO when compressor is switched off, if not renew.<br>Replace pressure-control valve.<br>Check that air-receiver pressure gauge returns to ZERO when receiver is fully de-pressurized, if not replace.<br>Check pressure switch is set correctly. |
| **High Temperature**<br>Very hot to touch.<br>High power, low air-output, high oil discharge.<br>Compressor cuts-out.<br>Oil life reduction.<br>Compressor seizes. | Incorrect oil level.<br>Unapproved oil, incorrect grade of oil being used.<br>Dirty or blocked cooler.<br>Re-circulation of hot air or lack of ventilation.<br>Thermostatic valve stuck in closed position.<br>Incorrect stator/rotor end clearance.<br>Oil relief valves leaking.<br>Internal oil passage blocked.<br>Oil return plug blocked.<br>Internal high pressure to low pressure leak. | Check temperature in thermometer pocket. If>95°C then:<br>a) Compressor location, check:<br>Ambient temperature too high (>40°C)<br>Air-intake temperature too high.<br>Air-intake located near heat source.<br>Excessively dusty conditions.<br>b). Air-end, check:<br>Oil level too low.<br>Wrong type or grade of oil.<br>Oil cooler blocked.<br>Prolonged running off-load. |
| **Low Air Output**<br>Malfunction of air-tools/equipment.<br>Pressure gauges reading low.<br>Rapid pressure loss from air-end on stopping.<br>Rapid pressure loss from air-line when compressor switch off. | Restriction in airline, valve closed.<br>Minimum pressure valve stuck closed.<br>Air intake filter blocked.<br>Pressure control valve stuck in open position.<br>Separator element blocked. | Carry-out air delivery test.<br>If less than specification, check air-end for:<br>Blocked air-intake filter.<br>Blocked separator element.<br>M.P.V. stuck closed.<br>Air leaks from air-end. |
| **Compressor Stops**<br>Compressor stops unexpectedly. | Pressure switch set low.<br>Over-temperature fault.<br>Motor overload tripped.<br>Supply voltage low.<br>Compressor seizing. | Re-adjust pressure switch.<br>Rectify over temperature fault.<br>Re-set motor overload.<br>Check supply voltage status.<br>Check compressor functionality. |
| **Excessive Oil Consumption**<br>Oil visible in tools and equipment.<br>Excessive oil usage.<br>Possible high oil temperature.<br>Possible high power absorption. | Wrong type or grade of oil.<br>Compressor over filled or not sited level.<br>Excessive air demand.<br>Separator element fractured and/or O-ring damaged.<br>Blocked oil return filters.<br>Excessive condensate in oil chamber. | Quantify oil discharge rate. If >5ppm, check for:<br>Wrong type or grade of oil.<br>Ambient temperature>40°C.<br>Air-intake temperature high.<br>Compressor not positioned on a level site.<br>Blocked oil-return plug.<br>Faulty separator element.<br>If within specification, check for:<br>Excessive air demand.<br>Air leaks in air-line system.<br>Too many stop/start cycles per hour |
| **Low Operating Temperature**<br>High oil discharge, but oil level does not fall.<br>High power, Low air-output. | Wrong/poor location for compressor.<br>Low duty cycle, insufficient demand.<br>Compressor operating temperature too low. | Remove oil drain plug, if water drains out before oil you have a problem.<br>Time the duty cycle, if compressor switches off within 15 minutes and is not called upon to restart within 2 hours, then duty cycle is too short.<br>If duty cycle is too short then either:<br>a) Run compressor fully on-load for at least one hour every week. |

# Standard Warranty

## Gardner Denver V Series Rotary Vane Compressors

### STANDARD WARRANTY

Gardner Denver (the "Company") warrants to each original retail purchaser ("Purchaser") of its new products from the Company or its authorized distributor that such products are, at the time of delivery to the Purchaser, free of defects in material and workmanship.

### STANDARD WARRANTY PERIOD

The Company's obligation under this warranty is limited to repairing or, at its option, replacing, during normal business hours at an authorized service facility of the Company, any part which in its judgment proved not to be as warranted within the applicable warranty period as follows. **Regular maintenance in accordance with the service manual is required. Use of genuine Gardner Denver OEM parts and lubricants are highly recommended. If a component failure is deemed a result of using non-genuine Gardner Denver parts and lubricants, warranty will not be allowed.**

| COMPONENT | STANDARD WARRANTY COVERAGE | DETAILS |
|---|---|---|
| **Package** | **12 months** from startup or **15 months** from date of shipment to first purchaser, whichever occurs first | All components within the package, excluding normal wear items |
| **Airend** | **24 months** from startup or **27 months** from date of shipment to first purchaser, whichever occurs first | Normal wearing items, such as shaft seals and inlet valve components, along with the servicing of these items is not covered under the warranty unless deemed as material or workmanship defects. Any disassembly or partial disassembly of the airend, or failure to return the "unopened" airend per Company instructions, will be cause for denial of warranty |
| **Electric Motors** | **12 months** from startup or **15 months** from date of shipment to first purchaser, whichever occurs first | Includes both drive motor and cooling fan motor. For nonstandard motors, the original manufacturer's warranty will take precedence. |
| **Major Package Components** | **24 months** from startup or **27 months** from date of shipment to first purchaser, whichever occurs first | Includes package controller, variable frequency drive if applicable, air/oil reservoir, air/oil cooler, and precision mixing valve (VS Series) |
| **Labor** | **Package / Electric Motors: 12 months** from startup or **15 months** from date of shipment to first purchaser, whichever occurs first<br><br>**Airend / Major Package Components: 24 months** from startup or **27 months** from date of shipment to first purchaser, whichever occurs first | Service will be provided by Company representative or authorized service personnel, for repair or replacement of any product or part which in the Company's sole judgment is proved not to be as warranted. Labor shall be limited to the amount specified in the Company's labor rate schedule. All costs of transportation of product, parts, and repaired or replacement parts claimed not to be as warranted to and from such service facilities shall be borne by the Purchaser. The Company may require the return of any part claimed not to be as warranted to one of its facilities as designated by Company, transportation prepaid by Purchaser, to establish a claim under this warranty. Replacement parts provided under the terms of the warranty are warranted for the remainder of the Warranty Period. |

**NO WARRANTY IS MADE WITH RESPECT TO:**

1. **ANY PRODUCT WHICH HAS BEEN REPAIRED OR ALTERED IN SUCH A WAY, IN THE COMPANY'S SOLE JUDGEMENT, AS TO AFFECT THE PRODUCT ADVERSELY**
2. **ANY PRODUCT WHICH HAS, IN THE COMPANY'S SOLE JUDGMENT BEEN SUBJECT TO NEGLIGENCE, ACCIDENT, IMPROPER STORAGE, OR IMPROPER INSTALLATION OR APPLICATION**
3. **ANY PRODUCT WHICH HAS NOT BEEN OPERATED OR MAINTAINED IN ACCORDANCE WITH THE RECOMMENDATIONS OF THE COMPANY**
4. **ANY RECONDITIONED OR PRIOR OWNED PRODUCT**

**STANDARD WARRANTY DISCLAIMER**

THE FOREGOING WARRANTY IS EXCLUSIVE AND IT IS EXPRESSLY AGREED THAT, EXCEPT AS TO TITLE, THE COMPANY MAKES NO OTHER WARRANTIES AND HEREBY EXPRESSLY DISCLAIMS ALL OTHER WARRANTIES, INCLUDING WITHOUT LIMITATION, EXPRESSED, IMPLIED OR STATUTORY WARRANTIES, INCLUDING ANY IMPLIED WARRANTY OF MERCHANTABILITY OR FITNESS FOR A PARTICULAR USE. THE REMEDY PROVIDED UNDER THIS WARRANTY SHALL BE THE SOLE, EXCLUSIVE AND ONLY REMEDY AVAILABLE TO PURCHASER AND IN NO CASE SHALL THE COMPANY BE SUBJECT TO ANY OTHER OBLIGATIONS OR LIABILITIES. UNDER NO CIRCUMSTANCES SHALL THE COMPANY BE LIABLE FOR SPECIAL, INDIRECT, INCIDENTAL OR CONSEQUENTIAL DAMAGES, EXPENSES, LOSSES OR DELAYS HOWSOEVER CAUSED. NO STATEMENT, REPRESENTATION, AGREEMENT, OR UNDERSTANDING, ORAL OR WRITTEN, MADE BY ANY AGENT, DISTRIBUTOR, REPRESENTATIVE, OR EMPLOYEE OF THE COMPANY WHICH IS NOT CONTAINED IN THIS WARRANTY WILL BE BINDING UPON THE COMPANY UNLESS MADE IN WRITING AND EXECUTED BY AN OFFICER OF THE COMPANY. THIS WARRANTY SHALL NOT BE EFFECTIVE AS TO ANY CLAIM WHICH IS NOT PRESENTED WITHIN 30 DAYS AFTER THE DATE UPON WHICH THE PRODUCT IS CLAIMED NOT TO HAVE BEEN AS WARRANTED. ANY ACTION FOR BREACH OF THIS WARRANTY MUST BE COMMENCED WITHIN ONE YEAR AFTER THE DATE UPON WHICH THE CAUSE OF ACTION OCCURRED. ANY ADJUSTMENT MADE PURSUANT TO THIS WARRANTY SHALL NOT BE CONSTRUED AS AN ADMISSION BY THE COMPANY THAT ANY PRODUCT WAS NOT AS WARRANTED. WARRANTY IS NOT TRANSFERRABLE.

NOTES:

NOTES:

*13-26-604VER00*

For additional information, contact your local representative or visit:
www.contactgd.com/compressors

©2019 Gardner Denver, Inc. Printed in U.S.A.

Please recycle after use.

Gardner Denver

NON-CYCLING REFRIGERATED AIR DRYERS

# GSRN Series

# Why Dry Compressed Air?

Compressed air has long been described as the fourth utility after electricity, natural gas and water. It is often the perfect energy resource for many industrial, commercial and instrument applications. During the act of compressing air, moisture naturally forms. Removing this moisture is vital to avoid costly equipment failure, product contamination and distribution system breakdown.

- Keep lubricants from being washed away from downstream components extending product life.
- Reduce product contamination in applications such as mixing, conveying, cooling and product blow down.
- Reduce compressed air system corrosion which would increase pressure drop and operational costs.

## What Compressed Air Quality Do I Need?

Answering the "Do I need a dryer?" question is typically easy. Pretty much every compressed air system needs a dryer. The question of "Which dryer do I need?" is more complex. The answer starts by knowing the ISO air quality classes and where in the spectrum your needs fall. The below chart lays out the acceptable contamination levels at the different classes. Your needs will be determined by your equipment and processes that utilize compressed air.

### STANDARDS PER ISO 8573.1

| QUALITY CLASSES | SOLID CONTAMINANTS (MAXIMUM PARTICLE SIZE IN MICRONS) | MAXIMUM PRESSURE DEW POINTS | | MAXIMUM OIL CONTENT (DROPLETS, AEROSOLS, & VAPOR PPM) | |
|---|---|---|---|---|---|
| | | ° F | ° C | W/W | MG/M³ |
| 0 | as specified | as specified | | as specified | |
| 1 | 0.1 | -94 | -70 | 0.008 | 0,01 |
| 2 | 1 | -40 | -40 | 0.08 | 0,1 |
| 3 | 5 | -4 | -20 | 0.8 | 1 |
| 4 | 15 | 38 | 3 | 4 | 5 |
| 5 | 40 | 45 | 7 | 21 | 25 |
| 6 | – | 50 | 10 | – | – |

# Superior Reliability & Total Energy Efficiency

## Why Design Simplicity?

Mark Twain once said "I didn't have time to write a short letter, so I wrote a long one instead." That same line of thought also rings true when it comes to refrigerated air dryers. It's easy to source a bunch of low-quality components and place them somewhere inside a box and call it a dryer. It takes time, effort and an attention to detail to make a simplified refrigerated dryer.

Time, effort and attention to detail is exactly what went into the design of the Gardner Denver GSRN. The GSRN design has its components laid out in a way that minimizes the footprint of the dryer as well as the interconnecting tubing inside the dryer. When implemented into your compressed air system, the benefits of a simplified design are increased reliability and better efficiency.

Simple to Make Complex.
Complex to Make Simple.

## Every Component in a GSRN Dryer is Carefully Selected

## Why the Best Componentry?

Quality dryers start with quality components. Through years of research and experience, Gardner Denver knows what it takes to build the best dryers on the market. Every component of the GSRN dryer has been tested and proven to be worthy of being associated with the Gardner Denver name.

# Design Simplicity Means Total Performance

## Simple Reliability

The GSRN design has a long history of performing above and beyond expectations. If you put a GSRN unit into your compressed air system, you will experience the reliability that thousands of customers have experienced prior to you. It doesn't get any simpler than that.

## American Made

Every GSRN unit is American Made in southeast Michigan. In addition to guaranteeing a quality product, this location ensures a quick turnaround for any non-stocked dryer orders. The GSRN is also supported out of American locations. Therefore, wherever you are located in North America, you will have superior availability for maintenance and replacement items.

## 5-Year Warranty to Match the Reliability

We don't just say that the GSRN is a quality machine, we back up the claim with an industry-leading five year standard warranty. Unlike competitive warranties that only cover certain components or pro-rate the warranty coverage as the dryer ages, this bumper-to-bumper warranty covers the entire dryer for the entire five years. There is no registration process and no ongoing maintenance requirements to ensure warranty coverage.

See warranty statement for details.

# Simple
# Energy Efficiency

Simply put, the less money you spend operating your business, the better. The design and componentry used in the GSRN equates to less energy consumed by your dryer, which equates to a lower spend on electricity. The next two pages break down the quality components of the GSRN and how they help reduce energy consumption. Before we dive into the components, let's take a look at pressure drop.

## Low Pressure Drops

Pressure drop in a compressed air system can significantly increase the power consumption of the system and increase your operating costs. Every 2 PSI of realized pressure drop equates to a 1% increase in horsepower consumed. All GSRN refrigerated dryers are designed to have pressure drops ranging from 1.2 to 3.6 PSID. When compared to competitive units that experience pressure drops up to 6.5 PSID, it starts to become apparent that GSRN dryers can significantly reduce your utility bill.

## Savings Example

Let's walk through some examples. Let's assume your operation uses a 50 HP compressor, runs 8,000 hours per year and realizes an electricity cost of $0.08 per kW/hr. This chart shows the cost impact of a 4, 8 and 12 PSI pressure drop.

| PRESSURE DROP | INCREASED POWER CONSUMPTION | INCREASED ENERGY COSTS |
|---|---|---|
| 4 PSI | 2.0% | $477 |
| 8 PSI | 4.0% | $954 |
| 12 PSI | 6.0% | $1,432 |

# Quality Components
# Make the Difference

When it comes to building world-class equipment, quality components are a must. Before offering a five year standard warranty, every component of our GSRN has been tested and proven to be superior.

## Stainless Steel Thermostatic Expansion Valve

As opposed to a capillary tube system that will change refrigerant flow on ambient conditions with no regard to system load, our thermostatic expansion valves modulate refrigerant flow in fluctuating ambient temperatures and compressed air loads. Without perfect operating conditions, a capillary tube system can and will cause premature refrigeration compressor failure.

## Stainless Steel Heat Exchanger

The low pressure drop realized by GSRN dryers is due in large part to the stainless steel heat exchanger. In addition to low pressure drop, the large chevron pattern of the heat exchanger reduces the chance of fouling.

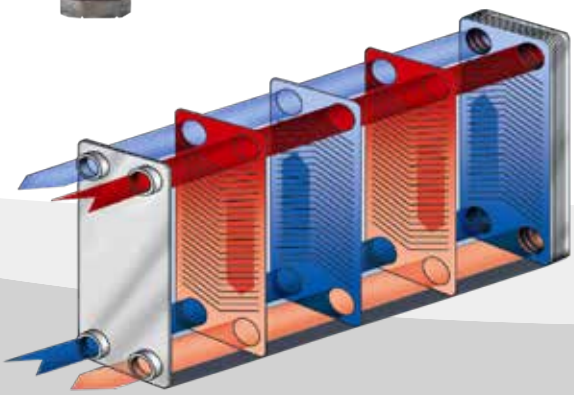

## Diaphragm Non-Fouling Solenoid Drain Valves

All timed condensate drains featured in the GSRN use diaphragm-type solenoid valves. Diaphragm valves keep the contaminant-laden condensate away from the internal moveable piston. If contaminant in the condensate stream fouls and restricts movement of the piston, the valve will fail.

## Full Suction & Discharge Service Ports

In order to make maintenance and field service as easy as possible, Gardner Denver equips each GSRN dryer with full suction and discharge refrigeration service valves.

## Stainless Steel Gauge with No-Leak Sweat Connection

Panel-mounted gauges are often a refrigerant leak point for dryers. With this in mind, the GSRN utilizes gauges with braised connections and coiled vibration eliminators.

# Quality Components Are a Must

# Plug-&-Play Simplicity—
# Unmatched Quality

## GSRN Non-Cycling Refrigerated Dryer

If your operation experiences steady compressed air demand, the tried and true design of the GSRN is where your dryer search should start. With decades of proven experience in the market, the GSRN design has proven to be a reliable workhorse in any industry.

- Flows from 10 to 2,250 CFM
- Delivers a 35–39° F pressure dew point
- Air-cooled and water-cooled packages
- Voltage options to match your needs
- Ambient condition, instrumentation, alarm, pressure and many more options available
- 5-year standard warranty

## GSRN Non-Cycling Refrigerated Air Dryer Operation

1. Warm saturated air from the air compressor flows in to the GSRN dryer where it is pre-cooled in the air-to-air heat exchanger by the dry outgoing air.
2. The air then passes through the air-refrigerant heat exchanger where it is further cooled to a specified dewpoint in which moisture condenses.
3. This condensed liquid is separated from the air stream by the separator and drained from the dryer by a diaphragm-type solenoid valve.
4. The cool, dry air is then reheated as it pre-cools the inlet air via the air-to-air heat exchanger which increases volume and prevents the compressed air piping from sweating.

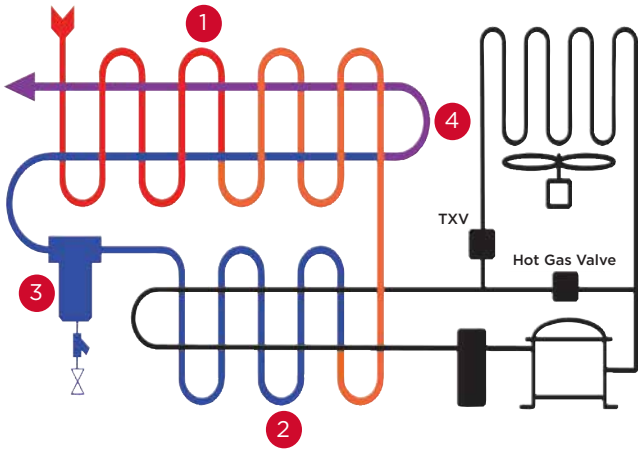

## GSRN SERIES SPECIFICATIONS

| MODEL | FLOWS SCFM @ 100 PSIG | FLOWS SCFM @ 120 PSIG | MAXIMUM PRESSURE PSIG | AVAILABLE VOLTAGES | IN/OUT CONNECTIONS NPT | DIMENSIONS INCHES HEIGHT | DIMENSIONS INCHES WIDTH | DIMENSIONS INCHES DEPTH | WEIGHT (LBS) |
|---|---|---|---|---|---|---|---|---|---|
| GSRN10 | 10 | 11 | 230 | 120/1/60 | ⅜″ Tbe | 10 | 15 | 13 | 59 |
| GSRN20 | 20 | 23 | | | ½″ | 20 | 13 | 17 | 103 |
| GSRN25 | 25 | 29 | | | ½″ | 20 | 13 | 17 | 114 |
| GSRN40 | 40 | 47 | | | ½″ | 20 | 13 | 17 | 114 |
| GSRN50 | 50 | 58 | | | ¾″ | 23 | 23 | 18 | 126 |
| GSRN75 | 75 | 88 | | 120/1/60 208-230/1/60 | ¾″ | 23 | 23 | 18 | 144 |
| GSRN100 | 100 | 115 | | | 1″ | 42 | 22 | 30 | 246 |
| GSRN125 | 125 | 145 | | | 1″ | 42 | 22 | 30 | 257 |
| GSRN150 | 150 | 175 | | | 1¼″ | 42 | 22 | 30 | 266 |
| GSRN200 | 200 | 235 | | 208-230/1/60 208-230/3/60 460/3/60 | 208-230/1/60 Volt is 1 ¼″ Others are 1 ½″ | 42 | 22 | 30 | 326 |
| GSRN250 | 250 | 295 | | 208-230/1/60 208-230/3/60 460/3/60 575/3/60 | 1½″ | 49 | 34 | 36 | 426 |
| GSRN300 | 300 | 350 | | | 2″ | 49 | 34 | 36 | 520 |
| GSRN400 | 400 | 470 | | 208-230/3/60 460/3/60 575/3/60 | 2″ | 49 | 34 | 36 | 570 |
| GSRN500 | 500 | 580 | | | 2″ | 49 | 34 | 46 | 647 |
| GSRN650 | 650 | 760 | | | 2″ | 49 | 34 | 46 | 657 |
| GSRN800 | 800 | 940 | 150 | | 3″ | 60 | 37 | 62 | 995 |
| GSRN1000 | 1000 | 1175 | | | 3″ | 60 | 37 | 62 | 1236 |
| GSRN1200 | 1200 | 1400 | | | 3″ | 60 | 37 | 62 | 1245 |
| GSRN1500 | 1500 | 1760 | | | 4″ Flange | 69 | 43 | 68 | 2400 |
| GSRN1750 | 1750 | 2055 | | | 4″ Flange | 69 | 43 | 68 | 2600 |
| GSRN2000 | 2000 | 2350 | | | 4″ Flange | 69 | 43 | 68 | 2800 |
| GSRN2250 | 2250 | 2650 | | | 4″ Flange | 69 | 43 | 68 | 3000 |

Capacity reflects a maximum 100° F inlet temperature and 100° F ambient. Dimensions and specifications are subject to change without notice.

## NON STANDARD CONDITION CAPACITY CORRECTION

| INLET TEMPERATURE °F | | 90 | | | 100 | | | 110 | | | 120 | | |
|---|---|---|---|---|---|---|---|---|---|---|---|---|---|
| AMBIENT TEMPERATURE °F | | 90 | 100 | 110 | 90 | 100 | 110 | 90 | 100 | 110 | 90 | 100 | 110 |
| INLET AIR PRESSURE | 70 psig | 1.00 | 0.92 | 0.84 | 0.8 | 0.73 | 0.67 | 0.66 | 0.6 | 0.55 | 0.5 | 0.45 | 0.41 |
| | 80 psig | 1.12 | 1.03 | 0.94 | 0.9 | 0.82 | 0.75 | 0.73 | 0.67 | 0.61 | 0.55 | 0.51 | 0.46 |
| | 90 psig | 1.24 | 1.14 | 1.04 | 0.99 | 0.91 | 0.83 | 0.81 | 0.75 | 0.68 | 0.61 | 0.56 | 0.51 |
| | 100 psig | 1.36 | 1.25 | 1.13 | 1.09 | 1.00 | 0.91 | 0.89 | 0.82 | 0.74 | 0.67 | 0.62 | 0.56 |
| | 110 psig | 1.48 | 1.36 | 1.23 | 1.18 | 1.08 | 0.99 | 0.97 | 0.89 | 0.81 | 0.73 | 0.67 | 0.61 |
| | 120 psig | 1.6 | 1.46 | 1.33 | 1.28 | 1.17 | 1.06 | 1.04 | 0.96 | 0.87 | 0.79 | 0.72 | 0.66 |
| | 130 psig | 1.72 | 1.57 | 1.43 | 1.37 | 1.26 | 1.14 | 1.12 | 1.03 | 0.94 | 0.85 | 0.78 | 0.71 |
| | 140 psig | 1.83 | 1.68 | 1.53 | 1.47 | 1.35 | 1.22 | 1.2 | 1.10 | 1.00 | 0.91 | 0.83 | 0.76 |
| | 150 psig | 1.95 | 1.79 | 1.63 | 1.56 | 1.43 | 1.3 | 1.28 | 1.17 | 1.07 | 0.97 | 0.89 | 0.81 |

To obtain flow capacities at conditions other that standard (SCFM @ 100 PSIG, 100° F Inlet & 100° F Ambient), locate the multiplier at the interception of actual operating conditions. Multiply the rated capacity of the selected dryer by the selected multiplier. The result is the corrected flow capacity of that dryer under corrected conditions.
Flow rates in excess of design due to capacity correction can result in increased pressure drop.

# The Options You Need

In addition to the main cooling, voltage and flow options, GSRN refrigerated dryers have a wide-range of available options. Below is a sampling of these options. If your operation demands an option that isn't included in this list, please contact your local Gardner Denver distributor. If you need it, we can supply it.

- NEMA 4 watertight electronics
- High pressure options up to 600 PSIG
- Stainless steel components
- Low ambient temperature packages
- Additional gauges, power switches and alarm options
- Many more. Just ask.

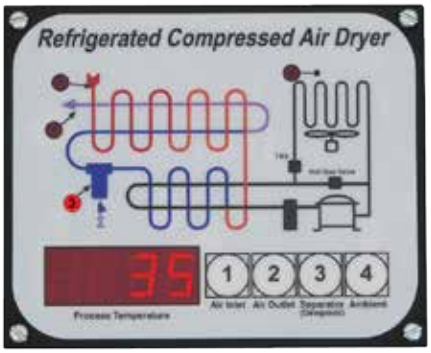


## Optional Refrigeration Digital System Monitor

In keeping with our goal of designing simple-to-use dryers, most GSRN units feature a gauge or set of gauges as a user interface. If the user wishes to receive additional feedback from their dryer, the GSRN models above 20 CFM have an optional digital system monitor available.

- Monitors air inlet temperature, air outlet temperature and separation (dewpoint) temperature
- 4–20 mA output for data-logging and/or remote system monitoring

This is a digital monitor only, not a controller. Whereas a controller is integrated into the system, and could cause a dryer shutdown due to electronic failure, this digital system monitor is simply monitoring the performance of the dryer.

# Sales & Service Distributors Across America

## An Extensive Network

By leveraging the extensive network of Gardner Denver factory-trained authorized local distributors, your sales, service and technical support needs can be handled quickly and easily.

To find a distributor visit:
gardnerdenverproducts.com

The leader in every market we serve

by continuously improving all business processes

with a focus on innovation and velocity

**Gardner Denver, Inc.**

1800 Gardner Expressway
Quincy, IL 62305
866-440-6241
www.gardnerdenver.com/gdproducts

©2018 Gardner Denver, Inc. Printed in U.S.A.
GA-G-GSRN 3rd Ed. 1/18

Please recycle after use.

Gardner Denver, Inc.
1800 Gardner Expressway
Quincy, IL 62305
PH: 800-682-9868
www.gardnerdenver.com

# *COMPRESSED AIR DRYER INSTRUCTION MANUAL*

# GSRN-SERIES

## REFRIGERATION TYPE
## NON CYCLING
## STANDARD

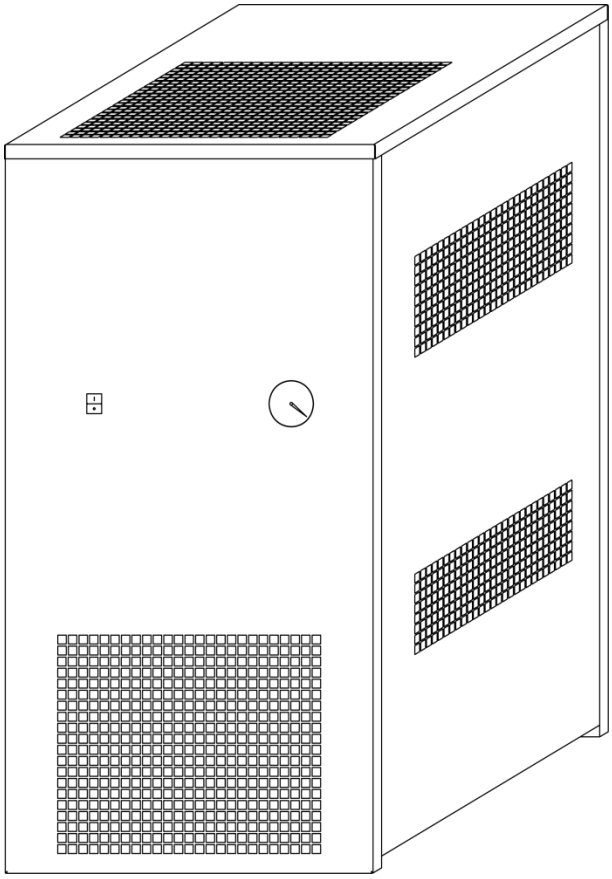

**Contents**


| | |
|---|---|
| Introduction | Page 2 |
| General Safety & Warnings | Page 2 |
| Proper Use of the Dryer | Page 3 |
| Receiving Equipment | Page 3 |
| Installation, Location and Piping | Page 3 |
| Recommended System Design | Page 4 |
| Electrical Connection | Page 4 |
| Condensate Drain | Page 5 |
| Start-up Procedure | Page 6 |
| Shut-down Procedure | Page 6 |
| Required Maintenance | Page 7 |
| Troubleshooting | Page 8 |
| Engineering Data | Page 9 |
| Warranty | Page 10 |


GSRN10-2250A-SM
060116

## INTRODUCTION

Before attempting any installation or maintenance on the dryer, please carefully read this entire manual.

Gardner Denver® Compressor and Dryer genuine parts, manufactured to design tolerances, are developed for optimum dependability – specifically for Gardner Denver compressor and dryer systems. Design and material innovations are the result of years of experience with hundreds of different compressor and dryer applications. Reliability in materials and quality assurance are incorporated in our genuine replacement parts.

Your authorized Gardner Denver Compressor and Dryer distributor offers all the backup and reassurance you'll need. Our network of authorized distributors provides the finest product support in the air compressor industry.

Your authorized distributor can support your Gardner Denver Dryer with these services:

1. Trained parts specialists to assist you in selecting the correct replacement parts.
2. Repair and maintenance kits designed with the necessary parts to simplify servicing your dryer.
3. Authorized distributor service technicians are factory trained and skilled in compressor and dryer maintenance and repair. They are ready to respond and assist you by providing fast, expert maintenance and repair services.

To Contact Gardner Denver or locate your local distributor:
Visit: www.contactgd.com/compressors or
Call: (800) 682-9868

Failure to install the compressed air dryer per this manual or any change to the dryer not previously authorized by the manufacture will void the warranty.

The information and specifications in this manual are in accordance with the information in effect at the time of printing. The manufacturer reserves the right to make changes without notice or incurring obligation.

## GENERAL SAFETY INFORMATION

**General Warning**
The associated text outlines conditions, which could indicate a hazardous situation that has some probability of death or severe injury.

**Electrical Hazard**
The associated text outlines conditions, which could indicate a hazardous situation that has some probability of death or severe injury.
Only qualified personnel can use and service electrically powered devices. Be sure that the voltage is disconnected before any work is performed.

**Personnel or Equipment Danger Hazard**
A compressed air dryer has two separate pressurized systems each with the potential to be pressurized independently. First is the sealed refrigeration system which should never be opened except by a licensed technician. Second is the actual compressed air circuit. Depressurize the compressed system prior to performing any work or maintenance on that system. Compressed air is a highly hazardous energy source. Never work on equipment with parts under pressure.

**Breathing Air**
Air treated by this equipment may not be suitable for breathing without further purification. Refer to applicable standards and specifications for the requirements of breathing quality air.

## PROPER USE OF DRYER

This dryer has been designed, manufactured and tested to separate humidity normally contained in compressed air **only**. Any other unauthorized use will be considered improper. The manufacturer will void the warranty and not be held responsible for any problem arising from improper use. The correct use requires adherence to installation conditions specified in this manual.

This dryer is supplied tested and fully assembled. The only operation left to the user is the connection to the plant in compliance with the instructions given in the following chapters.

## RECEIVING EQUIPMENT

Immediately upon receipt of equipment, remove all crating and packaging around equipment. Examine machinery for any damages either external or internal that may have occurred in transit.

If there is any physical damage or a refrigerant leak, **(suction/analyzer gauge reads zero)** please note all damages on bill of lading during delivery. If damage is detected after the equipment delivery; contact the local terminal to report all damages and file a claim immediately with the transportation company. The carrier is legally responsible for any damages, since the unit is shipped F.O.B.

## INSTALLATION LOCATION PIPING & CONNECTION

Particular care is required in selecting the installation site, as an unsuitable location could jeopardize the proper operation of the dryer. This unit is not suitable to be used in an explosive atmosphere, or where the risk of fire could be present.

The unit should be installed in an area that is clean and dry, allowing sufficient space on all sides for routine maintenance and service. It should be located on a level floor or shelf free from vibrations and sufficient to support the total weight of the machinery. Although the dryer package is a freestanding unit, it may be secured by bolting the base to the floor but is not required. **This standard dryer is designed for indoor installation**. Contact distributor if installing unit outdoors.

Installations at altitudes above 4000 feet (1219 meters) will experience a loss of capacity and may require field adjustments of pressure settings. The unit has been factory adjusted to operate up to 4000 feet (1219 meters), and if installation is above this altitude, contact your local distributor for correct refrigerant settings.

**Air-Cooled Units**

Allow (2') two feet, minimum clearance around the dryer for maintenance access and adequate free circulation of cooling air to the dryer. The ambient temperature around the dryer must not exceed 110°F (37.7°C) or be less than 40°F (10°C).

**Water-Cooled Unit & Y-Strainer Installation**

The fluid supply lines to the condenser should be sized to deliver the required flow of coolant. If the ambient temperature exceeds the supply fluid temperature by 10°F, insulate the inlet line to the condenser. Cooling fluid quality should be well maintained with proper water treatment and a low differential across the inlet filtration. If cooling supply lines are exposed to ambient that exceed the fluid temperature by 10°F the addition of insulation will help maintain the fluid cooling capacity.

| Condenser Cooling Water Supply Requirements | |
|---|---|
| Fluid Temperature | 60°F(15.6°C) to 90°F(32.2°C) |
| Filtration | 16-20 mesh strainer |
| pH | 6.6 to 7.2 |

Ambient temperatures below 40°F (10°C) require optional equipment specified below. Sufficient ventilation must be provided to maintain acceptable ambient for efficient operation. Consider heat rejection when locating dryer.

## RECOMMENDED SYSTEM DESIGN

A healthy, long-term, and trouble free compressed air supply design should be approached as a complete system, not individual components. The air compressor Intake location is vital to system health; it should supply clean fresh air that is free from possible contaminant (e.g. ammonia, chlorine or methane). Any contaminant entering the compressor intake will be concentrated by a factor of 8 due to the compression process in a typical compressed air system.

A properly sized and maintained compressed air aftercooler is vital to maintaining an acceptable system temperature range. GSRN Series refrigerated air dryers are designed to operate at rated flow with a maximum inlet temperature of 100°F (37.7°C). Units can be oversized to accommodate higher inlet temperatures up to 120°F (48.8°C). As dryer inlet temperatures rise above the design 100°F (37.7°C), the moisture holding capacity of the air rises dramatically. The following table represents the additional moisture load at elevated temperatures.

| Inlet Temperatures | 100°F (37.7°C) | 105°F (40.5°C) | 110°F (43.3°C) | 115°F (46.1°C) | 120°F (48.8°C) |
|---|---|---|---|---|---|
| Additional Load | 0% | **15%** | **32%** | **51%** | **75%** |

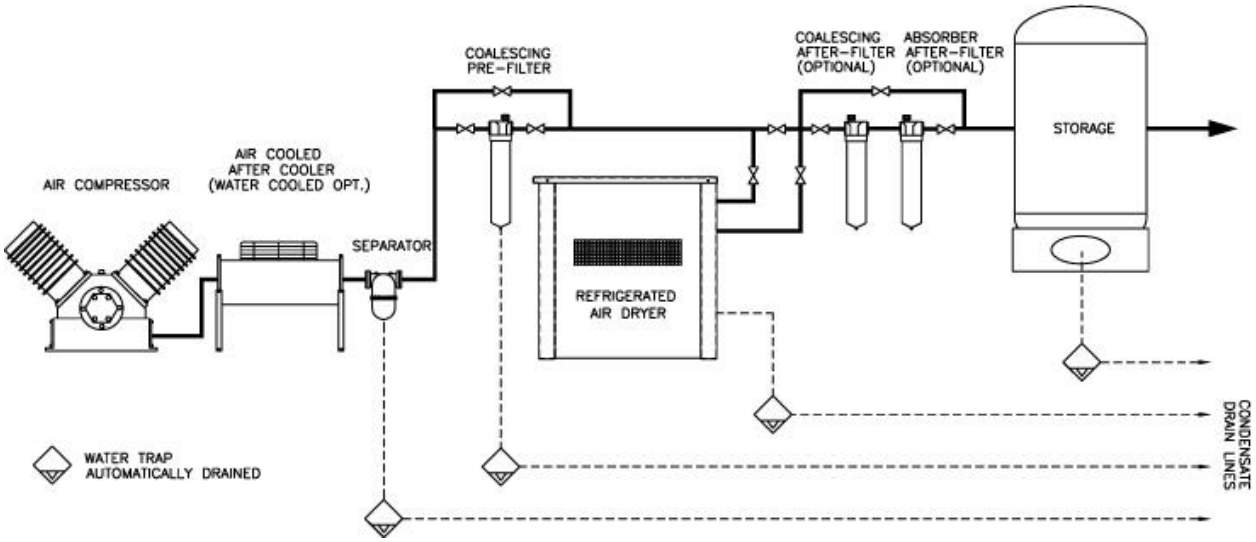


The pipe connection to the dryer should match the standard connection ports provided. The chart below is provided as a basic guide to size branch and header piping. It is recommended that shut-off valves with unions be installed at each port, with a valve bypass to permit isolation of the unit for servicing without interruption of plant air supply.

| Maximum Recommended Compressed Air Flow Schedule 40 pipe @ 95 to 115 PSIG | | | | | | | | | | |
|---|---|---|---|---|---|---|---|---|---|---|
| **Pipe Size** | ½" | ¾" | 1" | 1¼" | 1½" | 2" | 2½ | 3" | 4" | 6" |
| **Flow (SCFM)** | 40 | 100 | 150 | 200 | 350 | 650 | 900 | 1500 | 2500 | 5000 |

## ELECTRICAL CONNECTION

The Nameplate/Data plate located on each unit identifies the power supply requirements and maximum fuse specification. Units supplied with cord and plug requires the installation of a receptacle rated for 15 amps. Units supplied with electrical junctions, require a suitable fused disconnect in compliance with the National and Local Electrical Code requirements.

Three phase versions of the GSRN air dryer are NOT sensitive to phase alignment. Rotation of motors is universal

The wiring of all functional electrical components has been completed and tested at the factory in accordance with the electrical wiring schematic provided with this manual.

## CONDENSATE DRAINS

The condensate system is at line pressure and can cause personal injury or equipment damage when discharging. Securely anchor the drain pipes or tubes prior to dryer operation.
Prior to any maintenance isolate and depressurize condensate drain valves.

| Internal Float Drain<br>GSRN-10 through GSRN-40 | Electronic Drain Assembly<br>GSRN-50 through GSRN-2250 |
|---|---|
| 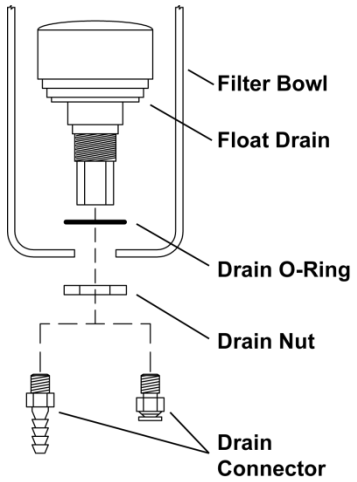 | |

When maintaining float drains depressurize the dryer & drain prior to work initiation.

Drain line and “Drain Connector” must be removed prior to bowl and float drain removal.

| Drain Timer Factory Preset | |
|---|---|
| 4 seconds | on time |
| 10 minutes | off time |

The factory setting is applicable for virtually all industrial applications. If adjustment is required contact your local distributor for alternate settings and procedures.

Condensate discharged from the dryer may contain oil/lubricants.
Verify and follow local regulations regarding disposal.

## STARTUP PROCEDURE

### GSRN-20A through GSRN-200A

Energize the refrigeration compressor by placing the “on/off” dryer switch with indicating light to the “on (I)” position. The refrigerant compressor and fan motor will begin to operate. The suction/analyzer gauge will fall to a range of 28-35 PSIG. If the suction/analyzer gauge is not in the specified range, contact your local distributor.

**GSRN-250-2250 or any 3-Phase powered unit**
**REQUIRE AN 8 HOUR CRANK CASE WARMUP PRIOR TO STARTUP**

To prevent equipment damage the unit must have primary power applied with the “on/off” switch in the “OFF (0)” position for no less than 8 hours. This energizes the crank case heater to allow any liquid refrigerant in the crankcase to be vaporized prior to startup. Energizing the dryer prior to crank case heating can “wash away” compressor lubricants and will cause premature compressor failure.

### GSRN-250A through GSRN-2250A

Energize the refrigeration compressor by placing the “on/off” dryer switch with indicating light to the “on (I)” position. The refrigerant compressor and fan motor will begin to operate. The suction/analyzer gauge will fall to an upper (RF) orange pie range of 73-82 PSIG and the discharge gauge will raise to a range of 190 to 382 PSIG. These units are equipped with condenser fan cycle controls and operate independent of the compressor. Each fan is controlled via a refrigeration discharge pressure switch (260-200 PSIG) for single fan units and (290-240 PSIG) for two fan units. If the suction/analyzer or discharge gauge is not in the specified range, contact your local distributor.

### GSRN-100W through GSRN-200W

The water-cooled series GSRN-100W through GSRN-200W utilizes a city or tower fluid supply. The unit is supplied with a water-regulating valve at the outlet of the refrigeration condenser. This valve modulates water flow to maintain a stable refrigerant discharge pressure of 125-145 PSIG. If the refrigeration discharge pressure maintains a pressure above or below this setting, adjustments will be required to the water-regulating valve. Contact your local distributor.

### GSRN-250W through GSRN-2250W

The water-cooled series GSRN-250W through GSRN-2250W utilizes a city or tower fluid supply. The unit is supplied with a water-regulating valve at the outlet of the refrigeration condenser. This valve modulates water flow to maintain a stable refrigerant discharge pressure of 250-275 PSIG. If the refrigeration discharge pressure maintains a pressure above or below this setting, adjustments will be required to the water-regulating valve. Contact your local distributor.

## SHUT DOWN PROCEDURE

When the dryer is to be shut down for service, maintenance, or other reasons switch the dryer off by placing the “on/off” dryer switch with indicating light to the “OFF (0)” position. If service or maintenance is required disconnect and lockout the main power supply, isolate and depressurize the internal compressed air pressure to atmosphere prior to commencement of any work.

**If the shutdown resulted in loss of main power interruption, repeat start up procedure so crank case heater has time to raise the crank case temperature.**

## REQUIRED MAINTENANCE

| INSPECTION | Frequency |
|---|---|
| Verify operation of the solenoid and auto float drain system. | Weekly or as required. |
| Verify refrigeration analyzer gauge is in the correct range. | |
| Verify operation of both cooling fans. | |

Disconnect and lockout dryer power as well as compressed air supply and depressurize prior to performing the following maintenance items.

| General Maintenance | Frequency |
|---|---|
| Clean refrigeration condenser coil by blowing dust and dirt from the inside of the cabinet out. (Opposite from normal fan air flow) Be sure to clean condenser fan motor to provide adequate cooling and fan blades to allow proper balance. | Monthly |
| Isolate the valve prior to the Solenoid drain system and remove and clean the strainer screen | Monthly |
| Replace filter element of inline filters. | 6 Months or High differential |

| Drain Service | Frequency |
|---|---|
| If the drain system is not discharging condensate and the strainer is clean, try cleaning debris from diaphragm, or replacing the solenoid or timer. | As Required |
| If the drain system is continually discharging condensate and air from the drain tube, try replacing the solenoid valve diaphragm, or the complete drain valve. | As Required |

**MODEL CAPACITY CORRECTION MULTIPLIER**

| | *Inlet Temp.* | *90°F* | | | *100°F* | | | *110°F* | | | *120°F* | | |
|---|---|---|---|---|---|---|---|---|---|---|---|---|---|
| | Ambient Temp. | 90 | 100 | 110 | 90 | 100 | 110 | 90 | 100 | 110 | 90 | 100 | 110 |
| Inlet Air Pressure | 70 | 1.10 | 1.01 | 0.86 | 0.81 | 0.74 | 0.63 | 0.60 | 0.55 | 0.47 | 0.45 | 0.42 | 0.35 |
| | 80 | 1.23 | 1.13 | 0.96 | 0.90 | 0.83 | 0.70 | 0.67 | 0.62 | 0.52 | 0.51 | 0.47 | 0.40 |
| | 90 | 1.35 | 1.24 | 1.06 | 1.00 | 0.91 | 0.78 | 0.74 | 0.68 | 0.58 | 0.56 | 0.51 | 0.44 |
| | 100 | 1.48 | 1.36 | 1.15 | 1.09 | 1.00 | 0.85 | 0.81 | 0.75 | 0.63 | 0.61 | 0.56 | 0.48 |
| | 110 | 1.61 | 1.47 | 1.25 | 1.18 | 1.09 | 0.92 | 0.88 | 0.81 | 0.69 | 0.66 | 0.61 | 0.52 |
| | 120 | 1.73 | 1.59 | 1.35 | 1.29 | 1.17 | 0.99 | 0.95 | 0.87 | 0.74 | 0.72 | 0.66 | 0.56 |
| | 130 | 1.86 | 1.70 | 1.45 | 1.37 | 1.26 | 1.07 | 1.02 | 0.94 | 0.80 | 0.77 | 0.71 | 0.60 |
| | 140 | 1.98 | 1.82 | 1.55 | 1.46 | 1.34 | 1.14 | 1.09 | 1.00 | 0.85 | 0.82 | 0.75 | 0.64 |
| | 150 | 2.11 | 1.93 | 1.64 | 1.55 | 1.42 | 1.21 | 1.16 | 1.06 | 0.90 | 0.87 | 0.80 | 0.68 |

To obtain flow capacities at conditions other that standard (SCFM @ 100 PSIG, 100°F Inlet & 100°F Ambient), locate the multiplier at the interception of actual operating conditions. Multiply the rated capacity of the selected dryer by the selected multiplier. The result is the corrected flow capacity. Flow rates in excess of specified due to capacity correction can result in increasing pressure drop.

## TROUBLESHOOTING

| Sec | Symptom | Possible Cause(s) | Corrective Action |
|---|---|---|---|
| **A** | Water downstream of dryer. | 1. Residual free moisture remaining in downstream piping | Drain low spots in system and purge with dry air |
| | | 2. Air By-pass system is open | Verify valve positions and correct valve positions |
| | | 3. Ambient temperature surrounding downstream piping is below the dryer's dewpoint. | Insulate and/or heat trace piping exposed to low ambient temperatures or dry air to a lower dewpoint. |
| | | 4. Free water (liquid) is entering the dryer | Dryers are designed to handle saturated air not condensed liquid. Install a separator and coalescing filter upstream of dryer. |
| | | 5. Condensate is not being drained | See section B |
| | | 6. Dryer is overloaded resulting in high dewpoint | See capacity charts to determine correct load |
| | | 7. Refrigeration system is not functioning. | See section E |
| | | 8. Suction pressure not in operating range | Contact your local distributor to perform adjustments. |
| **B** | Drain System Failure with no condensate discharge on test initiation. | 1. Drain strainer is clogged | Depressurize dryer and replace or clean drain strainer. |
| | | 2. Solenoid valve or electronic timer failure | Replace drain solenoid and or timer assembly |
| **C** | Drain System Failure with continuous condensate or air discharge. | 1. Solenoid valve diaphragm rupture or orifice path blocked open | Clean or replace internal diaphragm assembly. |
| **D** | High pressure drop across dryer | 1. Inlet flow exceeds maximum capacity | Check inlet flow vs. rated capacity |
| | | 2. Freezing of moisture in evaporator is restricting inlet air flow | If refrigerant suction pressure is out of standard operating range, contact your local distributor to perform adjustments. |
| **E** | | Refrigeration System Fault | |
| **E1** | Power on indicator does not illuminate | 1. Power failure, Line fuses blown, or disconnect open. | Have an electrician check electrical feed and connection integrity. |
| **E2** | Refrigeration compressor cycles on and off | 1. Ambient Conditions are above or below minimum or maximum ranges. | Verify range and rectify ambient conditions. |
| | | 2. Air-Cooled Units, Dirty condenser | Clean condenser as per required maintenance. |
| | | 3. Water-Cooled Units, High fluid temperature or low fluid flow. | Check fluid temperature, bring in range and check for free fluid flow through condenser. If problem persists contact your local distributor to perform adjustments. |

## ENGINEERING DATA

| Model GSRN | 10 | 20 | 25 | 40 | 50 | 75 | 100 | 125 | 150 | 200 | 250 | 300 |
|---|---|---|---|---|---|---|---|---|---|---|---|---|
| Capacity in SCFM @ 100 PSIG, 100°F Inlet & 100°F Ambient | 10 | 20 | 25 | 40 | 50 | 75 | 100 | 125 | 150 | 200 | 250 | 300 |
| Min. / Max. Inlet Pressure | 30 PSIG (2.1 kgf/cm²) / 220 PSIG (16.2 kgf/cm²) | | | | | | | | | | | |
| Max. Inlet Temperature | 120°F (48.8°C) | | | | | | | | | | | |
| Min. / Max. Ambient Temperature | 50°F (10°C) / 110°F (43.3°C) | | | | | | | | | | | |
| Inlet / Outlet Connections (NPT) | 3/8 OD | 1/2" | 1/2" | 1/2" | 3/4" | 3/4" | 1" | 1" | 1-1/4" | 1-1/4" | 1-1/2" | 2" |
| Delta Pressure / ΔP (PSID) @ Std. Rated Conditions | 2.0 | 1.5 | 1.7 | 1.7 | 1.9 | 2.7 | 3.0 | 3.5 | 2.4 | 3.4 | 3.4 | 3.9 |
| Product Weight | | 105 | 118 | 123 | 165 | 170 | 249 | 258 | 265 | 267 | 315 | 321 |
| Refrigeration Compressor Type | Non Cycling, Hermetic Type | | | | | | | | | | | |
| Refrigeration Compressor Horsepower | 1/7 | 1/7 | 1/5 | 1/4 | 1/3 | 1/2 | 5/8 | 3/4 | 3/4 | 1 | 1-1/2 | 1-1/2 |
| Ref. Compressor BTU/H @ 35°F Evaporator & 100°F Ambient | 969 | 969 | 1880 | 2250 | 2250 | 4142 | 5400 | 6120 | 6120 | 9550 | 12084 | 12084 |
| Watts @ 35°F Evap. & 100°F Amb. | 210 | 210 | 330 | 410 | 570 | 850 | 1080 | 1180 | 1180 | 1450 | 2270 | 2270 |
| Refrigerant Suction Pressure | 28-34 PSIG | | | | | | | | | | 69-81 PSIG | |
| Refrigerant Type | R134a | | | | | | | | | | R404A | |
| Refrigerant Charge | 4 oz. | 4 oz. | 8 oz. | 10 oz. | 13 oz. | 13 oz. | 3 Lbs. | 4 Lbs. | 4 Lbs. | 5 Lbs. | 7 Lbs. | 7 Lbs. |
| Nominal Voltage (Min-Max Range) | **115-1-60** (103-126) | | | | | | | | | | | |
| Min. Circuit Ampacity | | 2.8 | 5.0 | 6.6 | 7.7 | 12.4 | 15 | 17 | 17 | Not Available | | |
| Maximum Fuse Size (Amps) | | 15 | 15 | 15 | 15 | 15 | 20 | 20 | 20 | Not Available | | |
| RLA: Rated Load Amps | | 1.9 | 3.7 | 4.9 | 5.8 | 9.5 | 11.3 | 14.4 | 14.4 | Not Available | | |
| LRA: Locked Rotor Amps | | 14.4 | 29 | 27.5 | 32 | 48.0 | 58.8 | 69.0 | 69.0 | Not Available | | |
| Nominal Voltage (Min-Max Range) | **230/208-1-60** (187-253) | | | | | | | | | | | |
| Min. Circuit Ampacity | Not Available | | | | | 6.3 | 7.8 | 9 | 9 | 10.4 | 11.7 | 11.7 |
| Maximum Fuse Size (Amps) | Not Available | | | | | 15 | 15 | 15 | 15 | 20 | 20 | 20 |
| RLA: Rated Load Amps | Not Available | | | | | 4.8 | 5.9 | 7.7 | 7.7 | 8.1 | 9.5 | 9.5 |
| LRA: Locked Rotor Amps | Not Available | | | | | 23 | 27.4 | 41.8 | 41.8 | 41 | 51 | 51 |
| Overload | External "Klixon" Thermal and Current (Auto Reset) | | | | | | | | | | | |

| Model GSRN | 250 | 300 | 400 | 500 | 650 | 800 | 1000 | 1200 | 1500 | 1750 | 2000 | 2250 |
|---|---|---|---|---|---|---|---|---|---|---|---|---|
| Capacity in SCFM @ 100 PSIG, 100°F Inlet & 100°F Ambient | 250 | 300 | 400 | 500 | 650 | 800 | 1000 | 1200 | 1500 | 1750 | 2000 | 2250 |
| Min. / Max. Inlet Pressure | 30 PSIG (2.1 kgf/cm²) / 220 PSIG | | | | | 30 PSIG (2.1 kgf/cm²) / 150 PSIG (10.6 kgf/cm²) | | | | | | |
| Max. Inlet Temperature | 120°F (48.8°C) | | | | | | | | | | | |
| Min. / Max. Ambient Temperature | 50°F (10°C) / 110°F (43.3°C) | | | | | | | | | | | |
| Inlet / Outlet Connections (NPT) | 1-1/2" | 2" | 2" | 2" | 2" | 3" | 3" | 3" | 4" Flg | 4" Flg | 4" Flg | 4" Flg |
| Delta Pressure / ΔP (PSID) @ Std. Rated Conditions | 3.4 | 3.0 | 3.7 | 3.8 | 3.9 | 3.7 | 3.9 | 4.2 | 3.9 | 4.0 | 4.2 | 4.4 |
| Shipping Weight | 315 | 321 | 350 | 549 | 555 | 920 | 1009 | 1200 | 1600 | 1611 | 1980 | 2115 |
| Refrigeration Compressor Type | Non Cycling, Hermetic Type | | | | | | | | | | | |
| Refrigeration Compressor Horsepower | 1-1/2 | 1-1/2 | 2 | 3 | 3 | 4 | 5 | 7 | 9 | 9 | 10 | 10 |
| Ref. Compressor BTU/H @ 35°F Evaporator & 100°F Ambient | 12084 | 12084 | 14544 | 26832 | 26832 | 36624 | 47904 | 60540 | 74868 | 74868 | 87984 | 87984 |
| Watts @ 35°F Evap. & 100°F Amb. | 2270 | 2270 | 2743 | 5169 | 5169 | 5710 | 7544 | 10070 | 11760 | 11760 | 15210 | 15210 |
| Refrigerant Suction Pressure | 69-81 PSIG | | | | | | | | | | | |
| Refrigerant Type | R404a | | | | | | | | | | | |
| Refrigerant Charge | 7 Lbs. | 7 Lbs. | 7 Lbs. | 7 Lbs. | 7 Lbs. | 18 Lbs. | 22 Lbs. | 24 Lbs. | 40 Lbs. | 40 Lbs. | 40 Lbs. | 40 Lbs. |
| Condenser Fan Switch Pressure Settings | Primary = Cut In: 300 / Cut Out: 250 | | | | | Primary = Cut In: 265 / Cut Out: 215<br>Secondary = Cut In: 300 / Cut Out: 250 | | | | | | |
| Overload | Internal Thermal and Current (Auto Reset) | | | | | | | | | | | |
| Nominal Voltage (Min- Max Range) | **230/200-3-60** (180-253) | | | | | | | | | | | |
| Min. Circuit Ampacity | 9.2 | 9.2 | 10 | 19.4 | 19.4 | 19.6 | 26.6 | 35.4 | 38.2 | 38.2 | 47.1 | 47.1 |
| Maximum Fuse Size (Amps) | 15 | 15 | 20 | 30 | 30 | 35 | 45 | 70 | 70 | 70 | 90 | 90 |
| RLA: Rated Load Amps | 7.6 | 7.6 | 8.2 | 15.9 | 15.9 | 17.1 | 23.4 | 30.5 | 35.1 | 35.1 | 42.2 | 42.2 |
| LRA: Locked Rotor Amps | 38 | 38 | 38 | 98 | 98 | 117 | 128 | 155 | 157 | 157 | 210 | 210 |
| Nominal Voltage (Min- Max Range) | **460-3-60** (414-506) | | | | | | | | | | | |
| Min. Circuit Ampacity | 4.6 | 4.6 | 5.4 | 9.1 | 9.1 | 10.2 | 13.1 | 15.5 | 19.5 | 19.5 | 23.1 | 23.1 |
| Maximum Fuse Size (Amps) | 10 | 10 | 10 | 15 | 15 | 20 | 25 | 30 | 35 | 35 | 40 | 40 |
| RLA: Rated Load Amps | 3.8 | 3.8 | 4.4 | 7.5 | 7.5 | 8.9 | 11.8 | 13.7 | 17.9 | 17.9 | 21.1 | 21.1 |
| LRA: Locked Rotor Amps | 16 | 16 | 16 | 38 | 38 | 42 | 67 | 80 | 90 | 90 | 105 | 105 |
| Nominal Voltage (Min- Max Range) | **575-3-60** (546-603) | | | | | | | | | | | |
| Min. Circuit Ampacity | 4.1 | 4.1 | 4.8 | 9.1 | 9.1 | 9.5 | 11.66 | 13.8 | 17.37 | 17.37 | 20.9 | 20.9 |
| Maximum Fuse Size (Amps) | 15 | 15 | 15 | 15 | 15 | 20 | 30 | 30 | 50 | 50 | 50 | 50 |
| Total Amperage | 3.04 | 3.04 | 3.52 | 6 | 6 | 7.12 | 9.44 | 10.96 | 14.32 | 14.32 | 16.88 | 16.88 |
| LRA: Locked Rotor Amps | 16 | 16 | 16 | 38 | 38 | 42 | 67 | 80 | 90 | 90 | 105 | 105 |

## WARRANTY

Any standard **GSRN Series** Refrigerated Air Dryer manufactured by Gardner Denver is warranted free from defects in material and workmanship under normal use for a period of **5-Years.** The warranty applies to original purchaser effective at date of shipment from manufacturer's warehouse. Said warranty consists of 1-Year job site labor and 5-Years covering OEM replacement parts. The company's obligation under this warranty is limited to repairing or, at its sole option, replacing, during normal working hours at an authorized service facility of the company, any part which in its judgment proved to be not was warranted within the applicable warranty period.

This warranty covers the standard catalog GSRN series air dryers including options, ***excluding customer maintained components such as separator float assembly, drain solenoid, drain strainer screen, fan motor lubrication, condenser cleaning, and filter element replacement.***

This warranty applies to equipment installed, operated and maintained in accordance with the procedures and recommendations as outlined in the owner's manual.

Gardner Denver will not be responsible for the following items: Freon, insulation, torch charge, reclaiming charge, truck charges, freight damages, or any parts not original to the GSRN series dryer.

In all cases, seller must be given a reasonable opportunity to investigate and inspect any assumed defects. At seller's option, buyer must return any defective materials to seller's plant or authorized depot at buyer's expense. Freight charges for returned or replacement machines or parts are not the responsibility of Gardner Denver. Seller's liability whether on warranty contract or otherwise shall be limited to repair or replacement of material found within such period to be defective. In no event shall the seller be liable for consequential or special damages.

Gardner Denver shall not be responsible for any incidental or consequential damages or other costs resulting from the following; labor charges, delays, vandalism, negligence, fouling caused by foreign material, damage from adverse air conditions, chemicals, or any circumstances over which Gardner Denver has no control.

The liability of Gardner Denver for all loss or damage resulting from non-conforming goods or tender, including breach of any and all warranties, shall be limited to refund of the purchase price of the particular goods with respect to which the loss or damage occurred.

This warranty is in lieu of all other warranties oral or written, expressed or implied, including warranties of merchantability or fitness for a specific purpose are hereby excluded and disclaimed. **This warranty shall not apply to any equipment, which has been subjected to misuse, shipping damage, nonpayment, neglect or accident, nor shall it apply to any equipment that has been repaired or altered by persons not authorized for each incident with a Gardner Denver Authorization number.**

Gardner Denver, Inc.
1800 Gardner Expressway
Quincy, IL 62305
Ph: 800-682-9868
www.gardnerdenver.com/industrials

| GSRN-25A-116 Non-Cycling Refrigerant Air Dryer | | |
|---|---|---|
| Design Conditions | Flow Rate | 25 SCFM |
| | Pressure | 100 PSIG |
| | Inlet R.H. | 100% |
| | Outlet Pressure Dew Point | 35-39°F |
| | Temperature | 100°F inlet |
| | | 100°F Ambient |
| | Max. Pressure | 220 PSIG |
| | Delta Pressure | 4 PSID |
| Voltage | 115/1/60 | |
| Nameplate FLA | 4.11A | |
| Connections | Compressed Air Inlet / Outlet | 1/2” NPT |
| | Electrical | 115V Plug U.S. Standard |
| Heat Exchanger Materials | Refrigeration Condenser | Steel Fin, Copper Tube |
| | Compressed Air / Air | Stainless Steel Plate with Copper Brazing |
| | Compressed Air / Freon | |
| Component Info. | Moisture Separator | Integral to Heat Exchanger |
| | Condensate Drain | Zero Loss Displacement Drain |
| Refrigeration Components | Compressor | 1/5 HP Nominal |
| | | Hermetically Sealed |
| | Condenser | Air Cooled |
| | | Totally Enclosed Fan Motor |
| | Energy Usage | 330 watts @ 100% Capacity |
| | Capacity Control | Automatic Expansion Valve |
| | Freon | R134A |
| Weight & Dimensions | Shipping Weight | 118 Lbs. |
| | Dimensions | 20”H x 13”W x 17”D |

| GSRN Standard Features and Benefits |
|---|
| **5 Year parts Warranty / 1 Year labor** |
| Air-Cooled Refrigeration Condenser |
| Refrigeration analyzer gauge (Suction Pressure) |
| Compressor overload |
| Ozone friendly Refrigerant |
| Automatic expansion valve |
| Complete Cabinet enclosure |
| Zero Loss Displacement Drain |
| 9' Power Cord |
| Relay / Contactor |

| ITEM | QTY | DESCRIPTION |
|---|---|---|
| A | 1 | REFRIG. SUCTION PRESSURE GAUGE |
| | | |

NOTES:

1. ALL DIMENSIONS ARE IN INCHES.

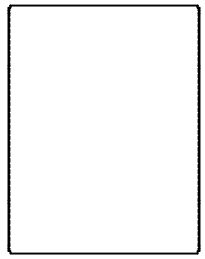

TOP VIEW

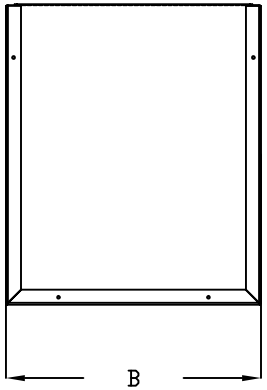


LEFT SIDE VIEW

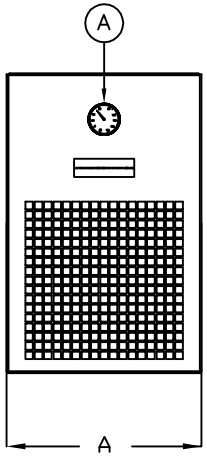


FRONT VIEW

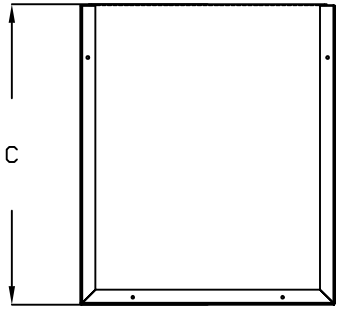


RIGHT SIDE VIEW

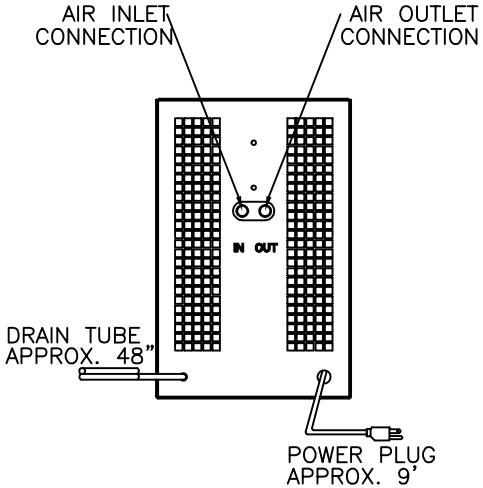


BACK VIEW

THIS DRAWING IS FOR REFERENCE ONLY.
IF YOU WANT AN EXACT DRAWING FOR PRODUCTION, CONTACT FACTORY AND REQUEST CERTIFIED PRINTS.

| MODEL GSRN | Capacity in SCFM @ | | REFRIG. COMP. H.P. | MAX WORKING PRESS. | WEIGHT (LBS.) | DIMENSIONS IN INCHES | | | |
|---|---|---|---|---|---|---|---|---|---|
| | 100PSIG | 120PSIG | | | | A | B | C | IN\OUT CONNECTION |
| 20A | 20 | 22 | 1/7 | 250PSIG | 105 | 13 | 17 | 20 | 1/2" NPT |
| 25A | 25 | 30 | 1/5 | 250PSIG | 118 | 13 | 17 | 20 | 1/2" NPT |
| 40A | 40 | 48 | 1/4 | 250PSIG | 123 | 13 | 17 | 20 | 1/2" NPT |

| REV. | DATE | DRN. | CHK'D |
|---|---|---|---|
| | | | |
| | | | |

Gardner Denver

TITLE
GSRN20–40A–116
REFRIGERATED
AIR DRYER

ORDER#

| | | | |
|---|---|---|---|
| DRN. | P. Bagley | CHK'D | K. Larson |
| DATE | 9/28/11 | DATE | 9/28/11 |
| SCALE | 1"=1" | TOL. | 1"= 1" |

CAD FILE NO.
Drawings/Refrig/GSRNMech/GSRN20–40A–116

DRAWING NO. 91685

PROJECT: Standard

# Dimensional Drawings
# gamma/ X, GMXa

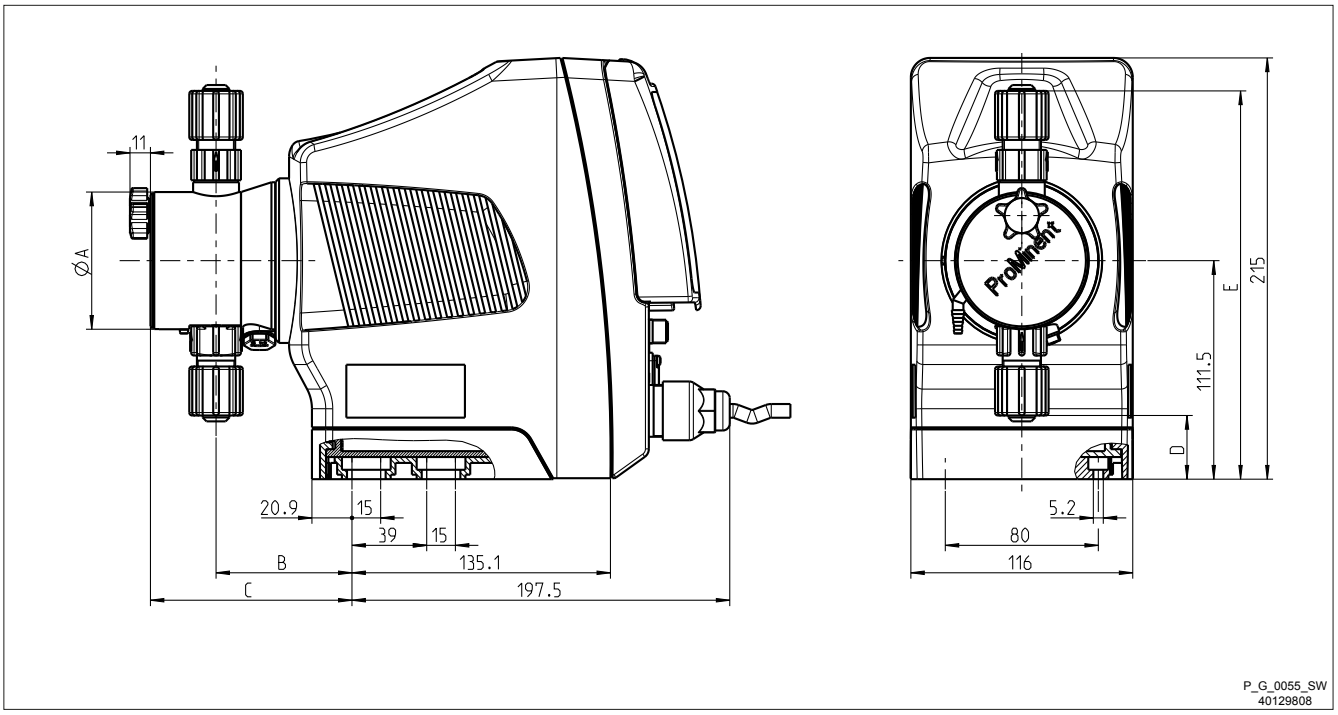

# 1 Dimensional Drawings

- *Compare the dimensions on the dimensional drawing with those of the pump and mounting foot.*
- *All dimensions are in mm.*

## Dimensional drawing of gamma/ X mounting foot

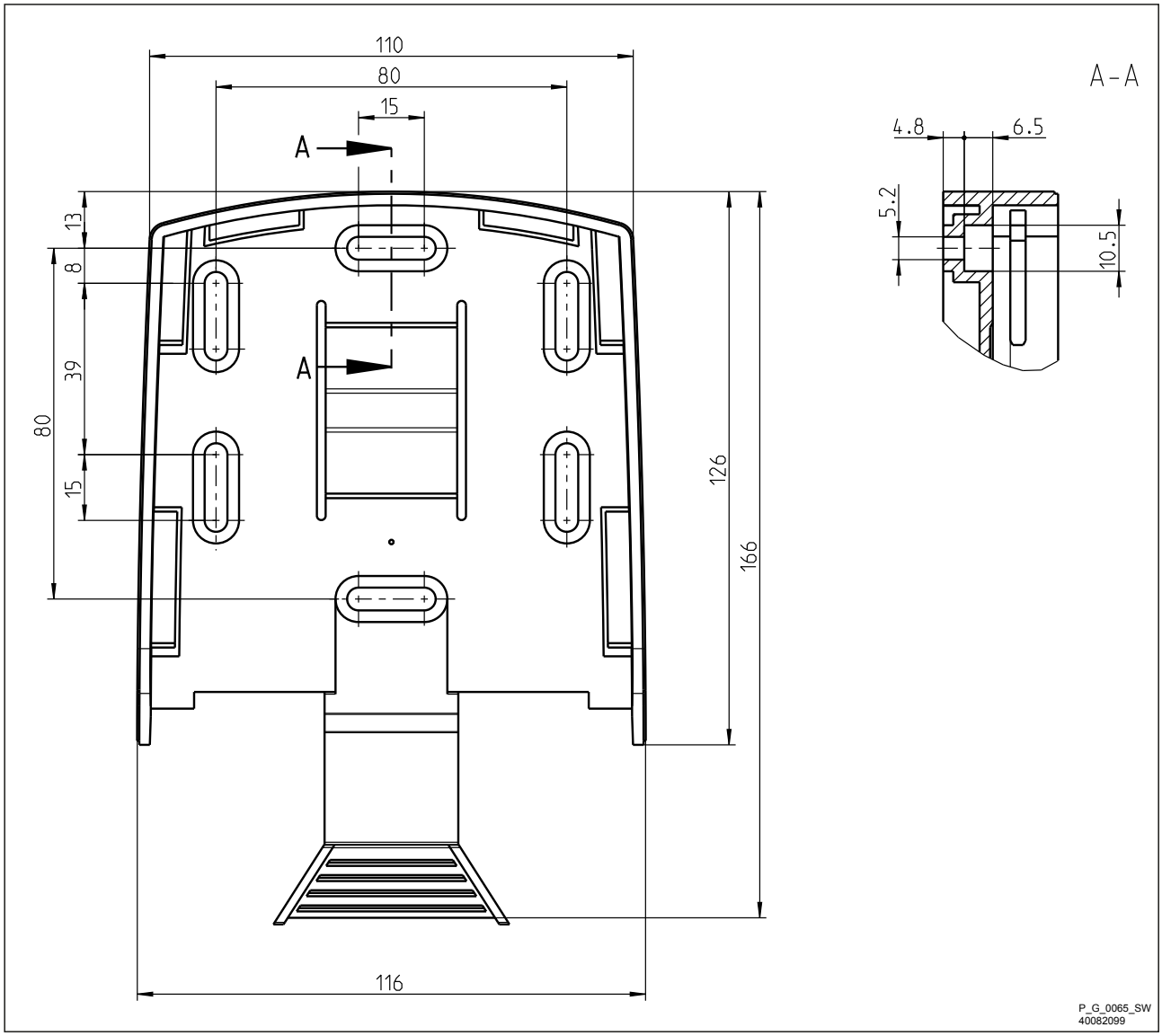


*Fig. 1*

## Dimensional drawing of gamma/ X, material versions PPE, PPB and PPT

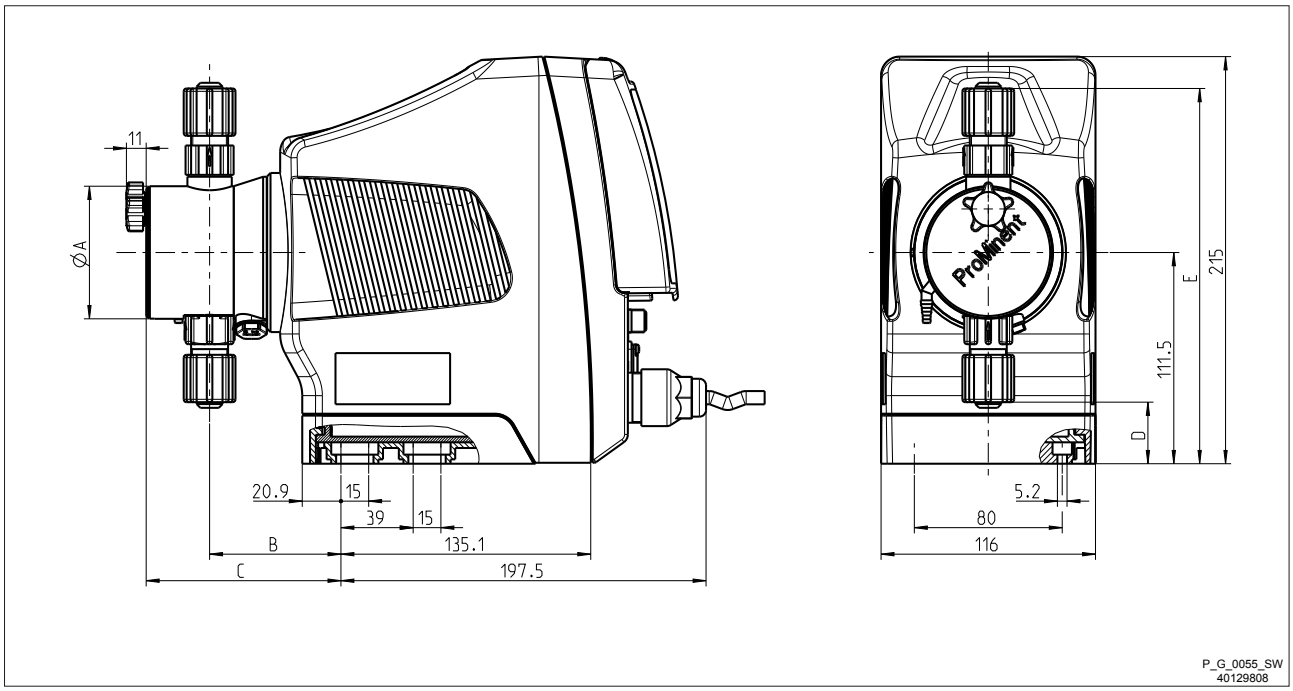


*Fig. 2*

| | gamma/ X M70 | | | gamma/ X M85 | | |
|---|---|---|---|---|---|---|
| | 1602 | 1009 - 0708 | 0424 - 220 | 1604 | 0715 - 0414 | 0245 |
| ØA | 70 | 90 | 90 | 70 | 90 | 110 |
| B | 71 | 74 | 76 | 71 | 74 | 76 |
| C (with bleed valve) | 106 | 108 | 110 | 106 | 107 | - |
| C (without bleed valve) | - | - | - | - | - | 93 |
| D | 32 | 24 | 24 | 32 | 24 | 14 |
| E | 23 | 13 | 15 | 13 | 15 | 5 |
| F | 198 | 202 | 202 | 198 | 202 | 209 |

## Dimensional drawing of gamma/ X, material versions NPE, NPB and NPT

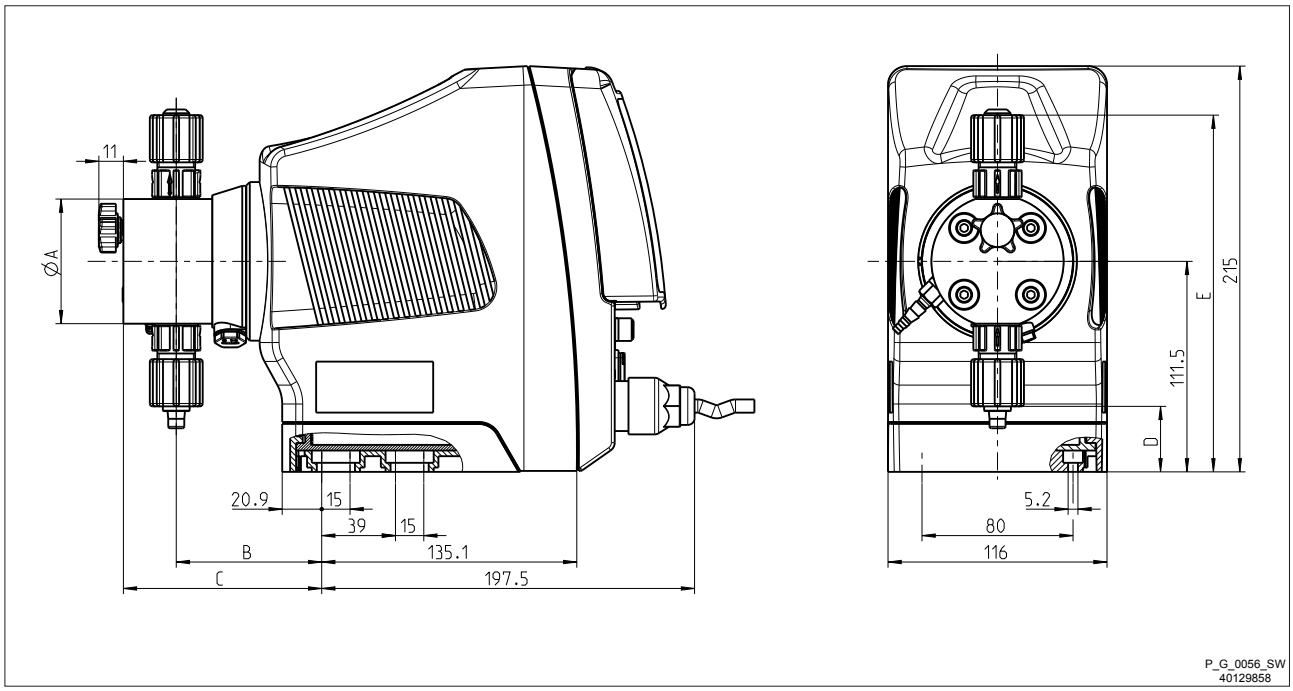


*Fig. 3*

| | gamma/ X M70 | | | gamma/ X M85 | | |
|---|---|---|---|---|---|---|
| | 1602 | 1009 - 0708 | 0424 - 220 | 1604 | 0715 - 0414 | 0245 |
| ØA | 70 | 90 | 90 | 70 | 90 | 110 |
| B | 77 | 74 | 76 | 77 | 76 | 76 |
| C (with bleed valve) | 105 | 102 | 104 | 105 | 104 | 105 |
| C (without bleed valve) | 92 | 91 | 91 | 92 | 91 | 91 |
| D | 33 | 23 | 23 | 33 | 23 | 14 |
| E | 191 | 200 | 200 | 191 | 200 | 210 |

## Dimensional drawing of gamma/ X, material version PVT

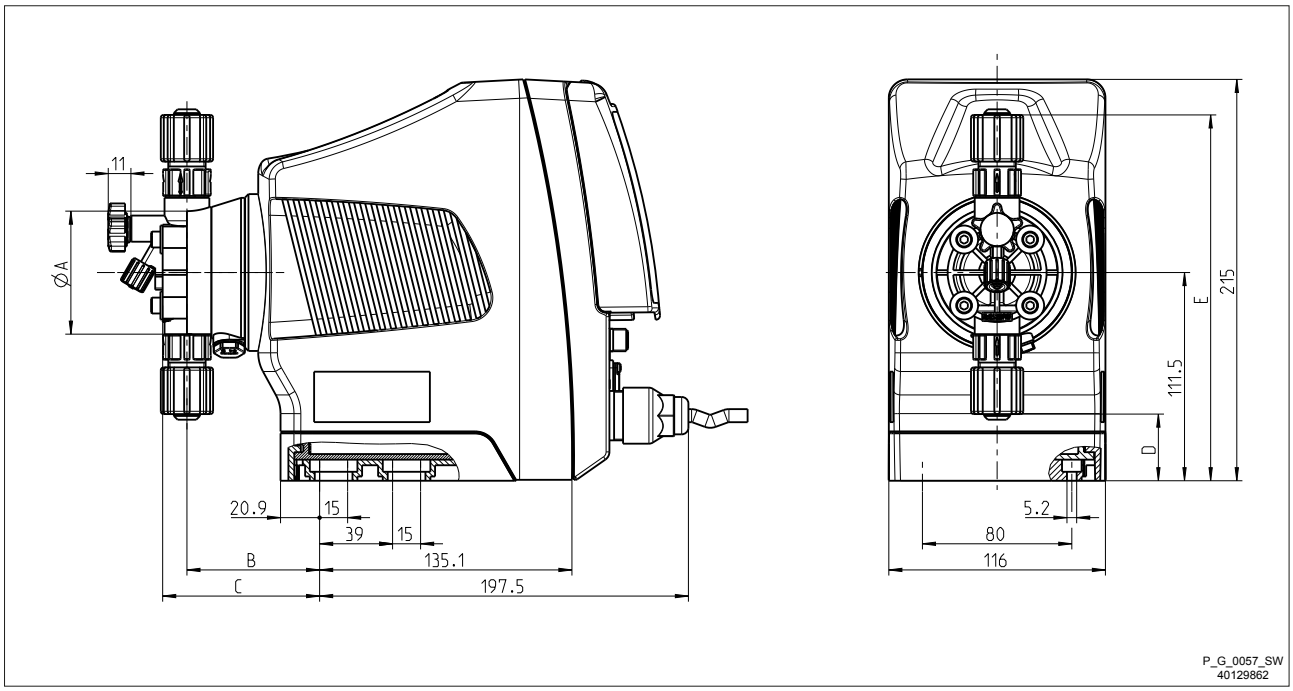


*Fig. 4*

| | gamma/ X M70 | | | gamma/ X M85 | | |
|---|---|---|---|---|---|---|
| | 1602 | 1009 - 0708 | 0424 - 220 | 1604 | 0715 - 0414 | 0245 |
| ØA | 70 | 90 | 90 | 70 | 90 | 110 |
| B | 71 | 75 | 79 | 71 | 73 | 76 |
| C (with bleed valve) | 84 | 92 | 90 | 84 | 90 | - |
| C (without bleed valve) | - | - | - | - | - | 93 |
| D | 36 | 25 | 25 | 36 | 25 | 14 |
| E | 196 | 203 | 203 | 196 | 203 | 209 |

## Dimensional drawing of gamma/ X, material version PVT HV

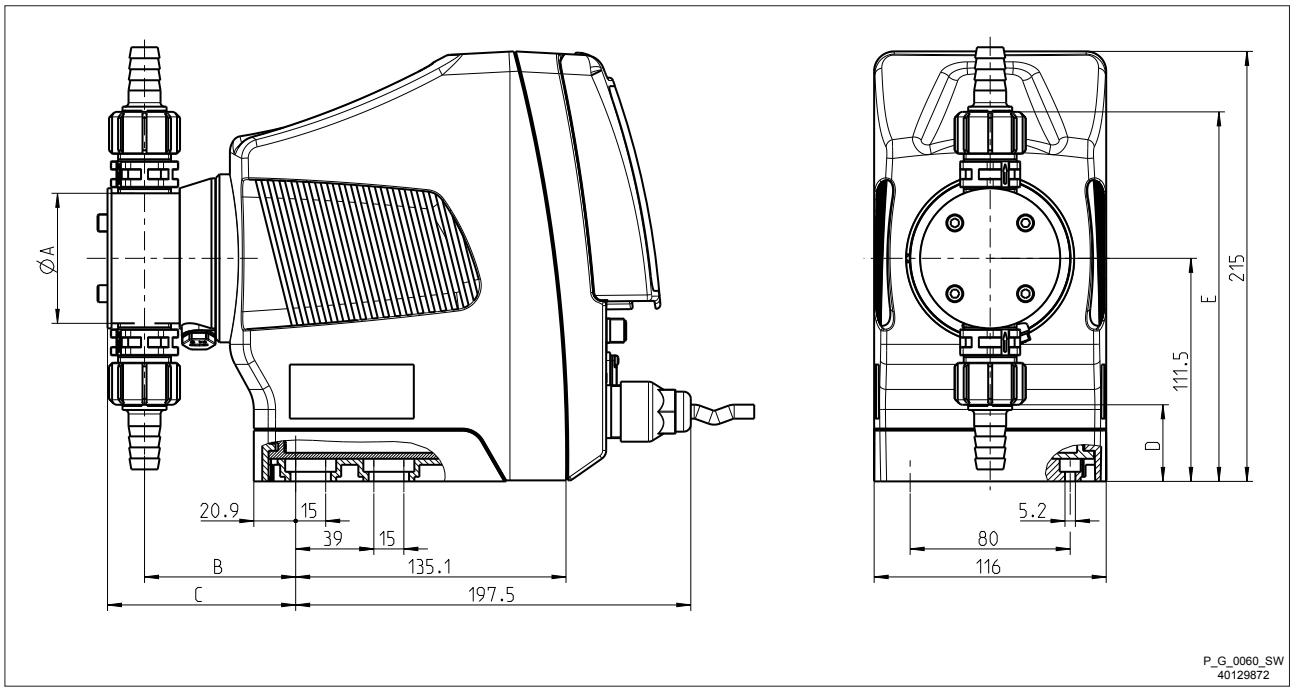


*Fig. 5*

| | gamma/ X M70 | | gamma/ X M85 | |
|---|---|---|---|---|
| | 1009 - 0708 | 0424 - 220 | 1604 | 0715 - 0414 |
| ØA | 80 | 85 | 70 | 80 |
| B | 78 | 79 | 76 | 78 |
| C | 96 | 97 | 94 | 96 |
| D | 33 | 30 | 38 | 33 |
| E | 190 | 193 | 185 | 190 |

## Dimensional drawing of gamma/ X, material version TTT

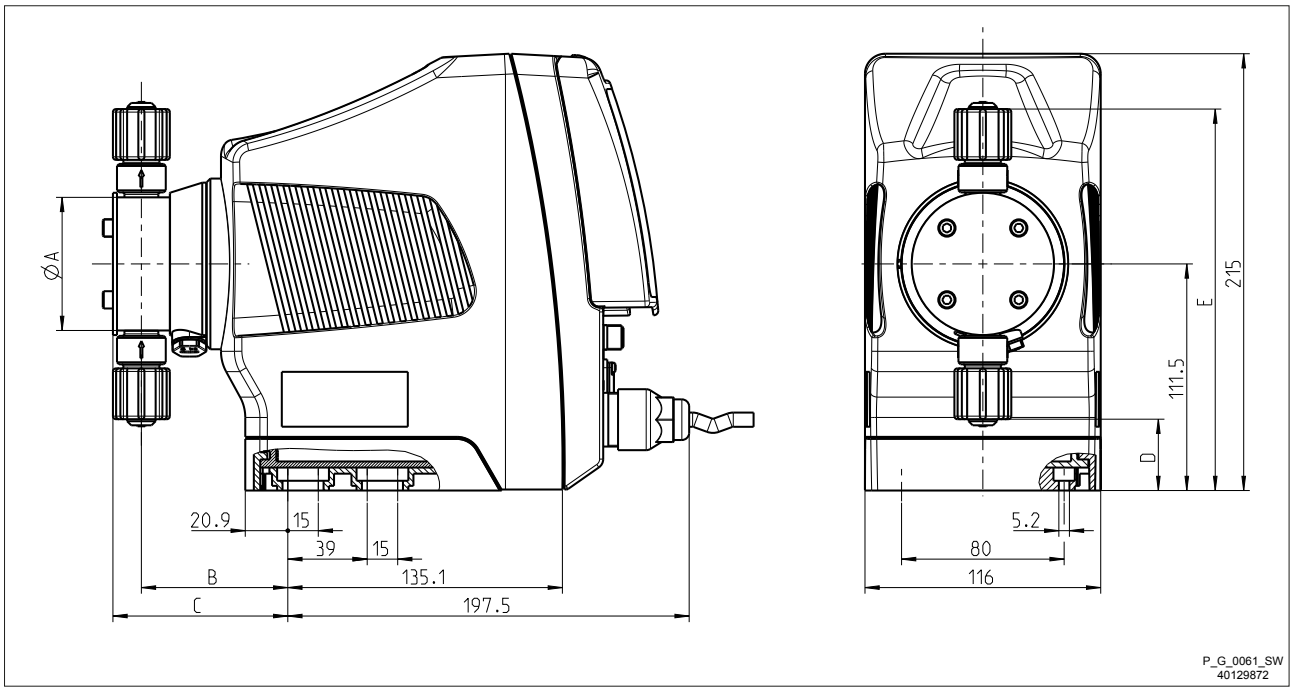


*Fig. 6*

| | gamma/ X M70 | | | gamma/ X M85 | | |
|---|---|---|---|---|---|---|
| | 1602 | 1009 - 0708 | 0424 - 220 | 1604 | 0715 - 0414 | 0245 |
| ØA | 70 | 85 | 85 | 70 | 85 | 100 |
| B | 72 | 79 | 77 | 72 | 77 | 78 |
| C | 86 | 96 | 96 | 86 | 96 | 97 |
| D | 35 | 3 | 3 | 35 | 3 | -5 |
| E | 188 | 220 | 202 | 188 | 220 | 227 |

## Dimensional drawing of gamma/ X, material version SST

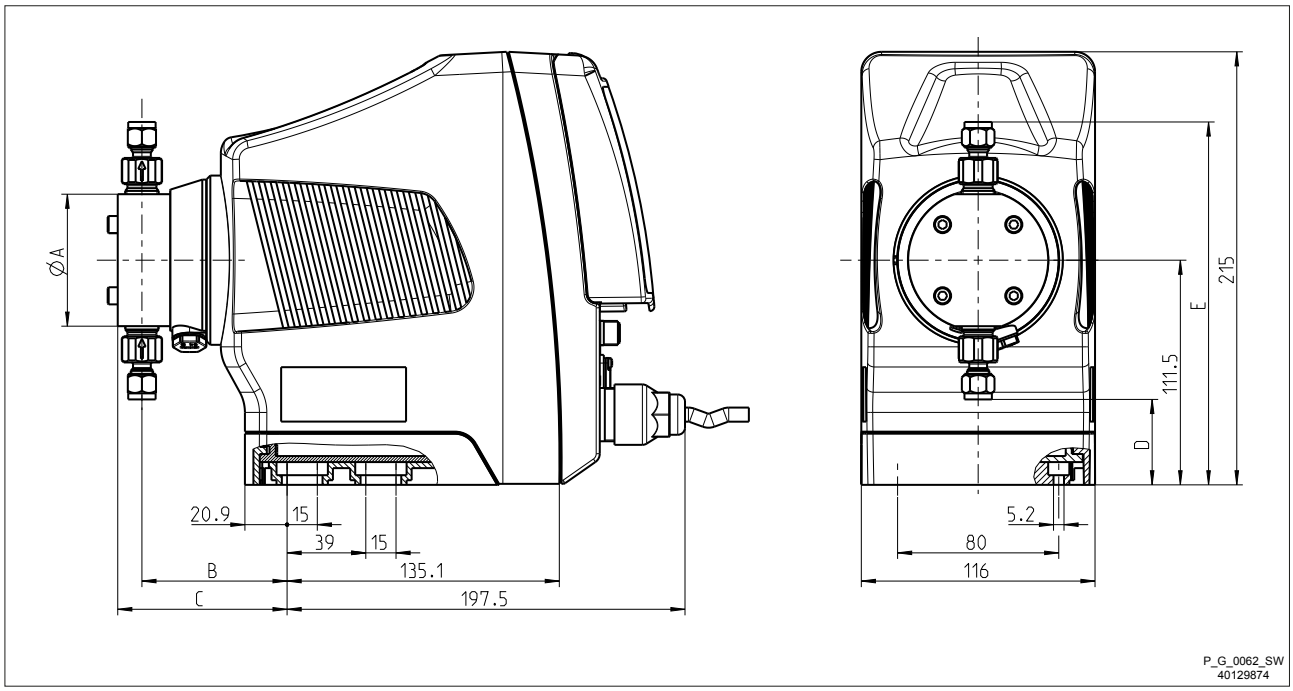


*Fig. 7*

| | gamma/ X M70 | | | gamma/ X M85 | | |
|---|---|---|---|---|---|---|
| | 1602 | 1009 - 0708 | 0424 - 220 | 1604 | 0715 - 0414 | 0245 |
| ØA | 70 | 85 | 85 | 70 | 85 | 100 |
| B | 72 | 79 | 77 | 72 | 77 | 78 |
| C | 84 | 94 | 94 | 84 | 94 | 95 |
| D | 42 | 11 | 11 | 42 | 11 | 4 |
| E | 180 | 211 | 211 | 180 | 211 | 219 |

## Dimensional drawing of gamma/ X, material version PPB SEK

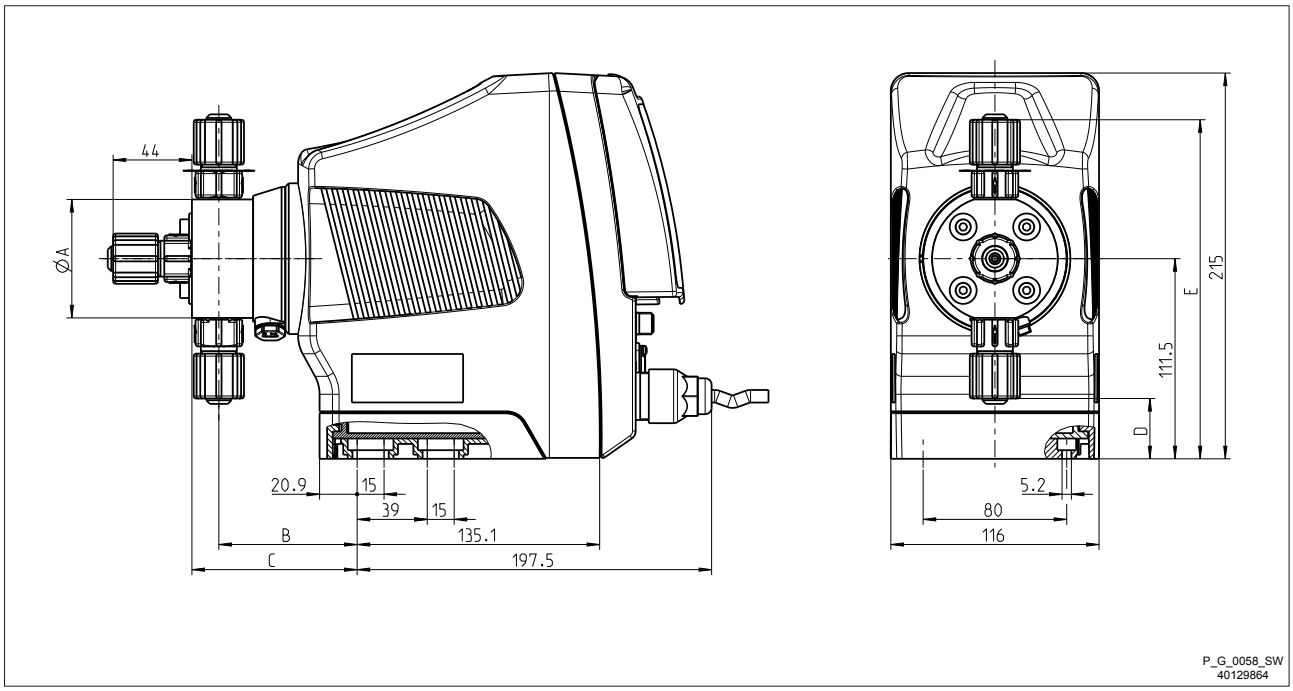


*Fig. 8*

| | gamma/ X M70 | | | gamma/ X M85 | |
|---|---|---|---|---|---|
| | 1602 | 1009 - 0708 | 0424 - 220 | 1604 | 0715 - 0414 |
| ØA | 70 | 90 | 90 | 70 | 90 |
| B | 77 | 74 | 76 | 77 | 76 |
| C | 92 | 89 | 91 | 92 | 91 |
| D | 33 | 24 | 24 | 33 | 24 |
| E | 189 | 199 | 199 | 189 | 199 |

## Dimensional drawing of gamma/ X, material version NPB SEK

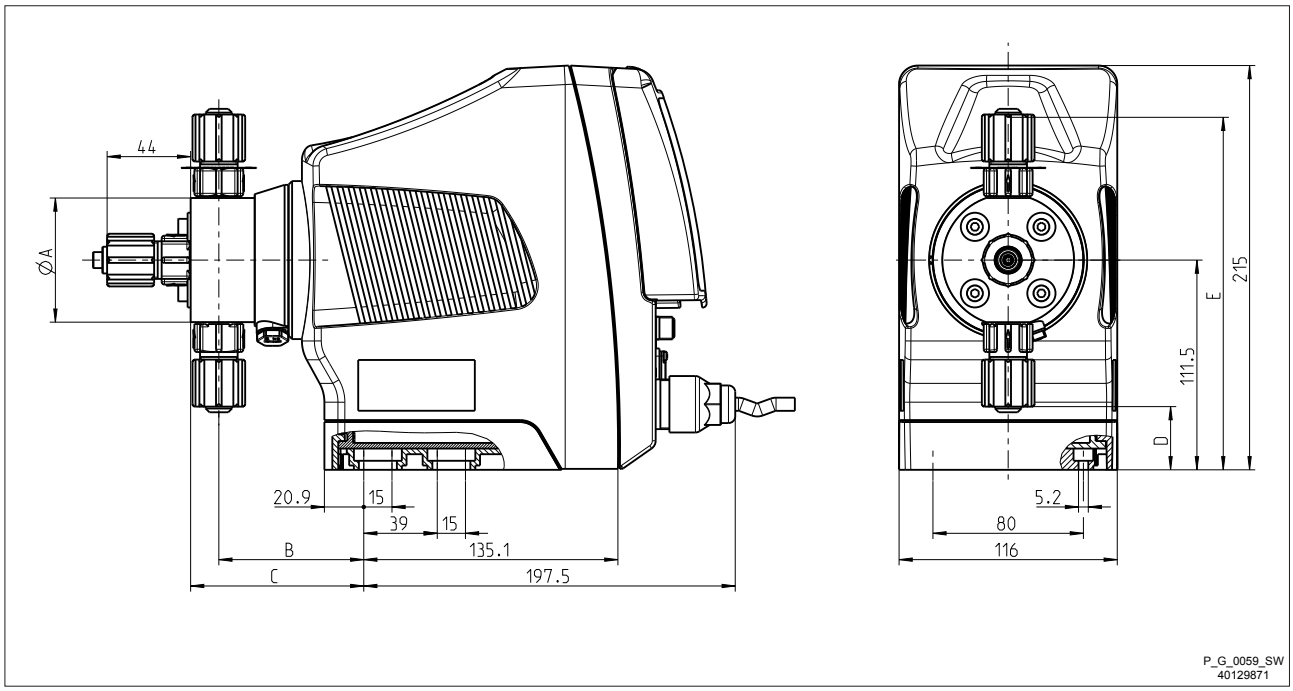


*Fig. 9*

| | gamma/ X M70 | | | gamma/ X M85 | |
|---|---|---|---|---|---|
| | 1602 | 1009 - 0708 | 0424 - 220 | 1604 | 0715 - 0414 |
| ØA | 70 | 90 | 90 | 70 | 90 |
| B | 77 | 76 | 76 | 77 | 76 |
| C | 92 | 91 | 91 | 92 | 91 |
| D | 33 | 24 | 24 | 33 | 24 |
| E | 189 | 199 | 199 | 189 | 199 |

# Solenoid-Driven Metering Pump gamma/ X

## gamma/ X – the proven best-seller intelligently extended

### Capacity range 2.3 – 45 l/h, 25 – 2 bar

The new solenoid-driven diaphragm metering pump gamma/ X is user-friendly and has an outstandingly long service life, just like its predecessor. An ingenious solenoid control measures the back pressure and protects the system from overload. This technology makes a pressure sensor superfluous, meaning that operating safety can be significantly increased: no additional parts come into contact with the feed chemical, there are no additional sealing surfaces and no electronic components come into contact with the feed chemical. Whether the metering volume fluctuates or hydraulic failures affect the metering process – the gamma/ X keeps everything at your fingertips.

It independently ensures a trouble-free metering process and should the pump ever need maintenance its service module draws attention to this.

## Your benefits

- Simple adjustment of the capacity directly in l/h
- Direct input of the required final concentration in concentration mode for volume-proportional metering tasks
- Integrated pressure measurement and display for greater safety during commissioning and in the process
- Capacity adjustment range 1:40,000
- Virtually wear-free solenoid drive, overload-proof and economical
- Suitable for continuous micro-metering from approx. 1 ml/h, thanks to the regulated solenoid drive

## Field of application

- Can be integrated into automated processes and used in all industries.
- The pump can work as a control unit with the timer, for example in cooling water treatment.

Printed in Germany, 1-4-2020.

# Solenoid-Driven Metering Pump gamma/ X

## gamma/ X – the proven best-seller intelligently extended

ProMinent®

## Technical Data

| Pump type | Delivery rate at max. back pressure | | | Stroke rate | Connection size o Ø x i Ø | Suction lift | Shipping weight | |
|---|---|---|---|---|---|---|---|---|
| | | | | | | | PP, NP, PV, TT | SS |
| | bar | l/h | ml/stroke | Strokes/min | mm | m WC | kg | kg |
| **gamma/ X** | | | | | | | | |
| GMXa 1602 | 16 | 2.3 | 0.19 | 200 | 6 x 4 | 6.0** | 3.6 | 4.1 |
| GMXa 1604 | 16 | 3.6 | 0.30 | 200 | 6 x 4 | 5.0** | 3.6 | 4.1 |
| GMXa 0708 | 7 | 7.6 | 0.63 | 200 | 8 x 5 | 4.0** | 3.7 | 5.0 |
| GMXa 0414 | 4 | 13.5 | 1.13 | 200 | 8 x 5**** | 3.0** | 3.7 | 5.0 |
| GMXa 0220 | 2 | 19.7 | 1.64 | 200 | 12 x 9 | 2.0** | 3.7 | 5.0 |
| GMXa 2504 | 25 | 3.8 | 0.32 | 200 | 8 x 4*** | 4.0** | 4.9 | 5.5 |
| GMXa 1009 | 10 | 9.0 | 0.75 | 200 | 8 x 5 | 3.0** | 5.1 | 6.5 |
| GMXa 0715 | 7 | 14.5 | 1.21 | 200 | 8 x 5**** | 3.0** | 5.1 | 6.5 |
| GMXa 0424 | 4 | 24.0 | 2.00 | 200 | 12 x 9 | 3.0** | 5.1 | 6.5 |
| GMXa 0245 | 2 | 45.0 | 3.70 | 200 | 12 x 9***** | 2.0** | 5.2 | 7.0 |
| **gamma/ X metering pumps with self-bleeding dosing head without bypass** | | | | | | | | |
| GMXa 1602 | 10 | 0.9 | 0.08 | 200 | 6 x 4 | 1.8** | 3.6 | – |
| GMXa 1604 | 10 | 1.6 | 0.13 | 200 | 6 x 4 | 1.8** | 3.6 | – |
| GMXa 0708 | 7 | 5.7 | 0.48 | 200 | 8 x 5 | 1.8** | 3.7 | – |
| GMXa 0414 | 4 | 12.0 | 1.00 | 200 | 8 x 5 | 1.8** | 3.7 | – |
| GMXa 0220 | 2 | 17.4 | 1.45 | 200 | 12 x 9 | 1.8** | 3.7 | – |
| GMXa 1009 | 10 | 6.0 | 0.50 | 200 | 8 x 5 | 1.8** | 5.1 | – |
| GMXa 0715 | 7 | 12.9 | 1.08 | 200 | 8 x 5 | 1.8** | 5.1 | – |
| GMXa 0424 | 4 | 19.2 | 1.60 | 200 | 12 x 9 | 1.8** | 5.1 | – |

gamma/ X metering pumps with dosing heads for high-viscosity media have a 10 – 20% lower capacity and are not self-priming.
G 3/4-DN 10 connector with d 16-DN 10 hose nozzle.

* The given performance data represents guaranteed minimum values, calculated using water as the medium at room temperature.

** Suction lift with a filled dosing head and filled suction line, with a self-bleeding dosing head with air in the suction line

*** with stainless steel design 6 mm connector width

**** with stainless steel design 12 mm connector width

***** with stainless steel design DN 10

All data refers to water at 20 °C.

Printed in Germany, 1-4-2020.

# Solenoid-Driven Metering Pump gamma/ X

## gamma/ X – the proven best-seller intelligently extended

### Materials in Contact With the Medium

| | Dosing head | Suction/pressure connector | Ball seat | Seals | Balls |
|---|---|---|---|---|---|
| PPT | Polypropylene | PVDF | PVDF | PTFE | Ceramic |
| NPT | Clear acrylic | PVDF | PVDF | PTFE | Ceramic |
| PVT | PVDF | PVDF | PVDF | PTFE | Ceramic |
| TTT | PTFE with carbon | PTFE with carbon | Ceramic | PTFE | Ceramic |
| SST | Stainless steel material no. 1.4404 | Stainless steel material no. 1.4404 | Ceramic | PTFE | Ceramic |

Metering reproducibility: ±2% when used according to the instructions in the operating instructions

Permissible ambient temperature: -10 °C to +45 °C

| | |
|---|---|
| Mean power consumption: | 25/30 W |
| Degree of protection: | IP 66, NEMA 4X, insulation class F |

**Scope of supply**
**Metering pump with mains cable, connector kit for hose/tube connector as per table.**

Printed in Germany, 1-4-2020.

ProMinent®

# Operating instructions

## Solenoid Metering Pump
## gamma/ X, GMXa

EN

Please carefully read these operating instructions before use. · Do not discard.
The operator shall be liable for any damage caused by installation or operating errors.
The latest version of the operating instructions are available on our homepage.

Part no. 984586 Original Operating Instructions (2006/42/EC) BA G 052 02/17 EN

## Supplementary information

*Fig. 1: Please read!*

Read the following supplementary information in its entirety! Should you already know this information, you will benefit more from referring to the operating instructions.

The following are highlighted separately in the document:

- Enumerated lists

→ Instructions

⇨ Outcome of the instructions

↳ *„State the identity code and serial number“ on page 2*: Links to points in this chapter

- refer to ... : References to points in this document or another document

*[Keys]*

*„Menu level 1 ➔ Menu level 2 ➔ Menu level ...“*: Menu paths

*„Software interface text“*

### Information

*This provides important information relating to the correct operation of the unit or is intended to make your work easier.*

### Safety Information

Safety information is identified by pictograms - see "Safety Chapter".

## State the identity code and serial number

Please state the identity code and serial number, which you can find on the nameplate or in the menu under *„Setting / Menu ➔ Information“* when you contact us or order spare parts. This enables the unit type and material versions to be clearly identified.

# Table of contents


1 Identity Code ... 6
2 About this pump ... 8
3 Safety Chapter ... 9
4 Storage, Transport and Unpacking ... 14
5 Overview of Equipment and Control Elements ... 15
5.1 Overview of equipment ... 15
5.2 Control elements ... 16
5.2.1 Control elements ... 16
5.2.2 Key functions ... 20
6 Functional Description ... 21
6.1 Liquid End ... 21
6.2 Drive unit ... 21
6.3 Capacity ... 23
6.4 Self-Bleeding ... 23
6.5 Operating modes ... 23
6.6 Functions ... 24
6.7 Relay (Options) ... 24
6.8 LED Displays ... 25
6.9 Hierarchy of Operating Modes, Functions and Fault Statuses ... 25
7 Assembly ... 27
8 Installation, hydraulic ... 29
8.1 Installing hose lines ... 30
8.1.1 Installation of Metering Pumps Without Bleed Valve ... 30
8.1.2 Installation of Metering Pumps With Bleed Valve ... 33
8.1.3 Installation of Metering Pumps With Self-bleeding (SEK Type) ... 33
8.2 Basic installation notes ... 35
9 Installation, electrical ... 36
9.1 Supply voltage connector - mains voltage ... 37
9.2 Description of the Terminals ... 38
9.2.1 "External control" terminal ... 38
9.2.2 "Level switch" terminal ... 39
9.2.3 "Dosing monitor" terminal ... 39
9.2.4 "Diaphragm rupture indicator" terminal ... 40
9.2.5 Relay ... 40
10 Basic Set-up Principles ... 44
10.1 Basic Principles for Setting up the Control ... 44
10.2 Checking adjustable variables ... 46
10.3 Changing to set up mode ... 46
11 Set Up / *„Menu“* ... 47
11.1 *„Information“* ... 47
11.2 *„settings“* ... 47
11.2.1 *„Operating Mode“* ... 47
11.2.2 *„Automatic“* ... 52
11.2.3 *„Stroke length“* ... 52
11.2.4 Metering ... 53
11.2.5 Concentration ... 57
11.2.6 Calibration ... 63
11.2.7 System ... 64
11.2.8 Inputs/outputs ... 65
11.2.9 Bleed valve ... 69

11.2.10 *„Priming time“* ... 70
11.2.11 *„Set time“* ... 70
11.2.12 *„Date“* ... 70
11.3 Timer ... 70
11.3.1 Timer Activation ... 71
11.3.2 Setting the Timer ... 71
11.3.3 Clear All ... 73
11.3.4 Example ... 73
11.4 *„Service“* ... 73
11.4.1 *„Access protect.“* ... 73
11.4.2 *„Password “* ... 74
11.4.3 *„Clear counter“* ... 74
11.4.4 *„Log book“* ... 75
11.4.5 *„Replace diaphragm“* ... 75
11.4.6 *„Display“* ... 75
11.4.7 *„Factory settings“* ... 75
11.4.8 Diaphragm part number: XXXXXXX ... 76
11.4.9 Spare parts kit part number: XXXXXXX ... 76
11.5 *„Language“* ... 76

**12 Operation ... 77**
12.1 Manual operation ... 77

**13 Maintenance ... 79**

**14 Repairs ... 81**
14.1 Cleaning Valves ... 82
14.2 Replacing the Diaphragm ... 83
14.3 Cleaning the Diaphragm Rupture Indicator ... 85

**15 Troubleshooting ... 86**
15.1 Faults without a fault message ... 86
15.2 Faults with error message ... 87
15.2.1 Fault messages on the LCD screen ... 87
15.2.2 Warning messages on the LCD screen ... 88
15.2.3 All Other Faults ... 89
15.3 Log book ... 89
15.3.1 Fault messages in the log book ... 89
15.3.2 Warning messages in the log book ... 90
15.3.3 Event messages in the log book ... 90
15.3.4 Log book entry - Detailed view ... 91

**16 Decommissioning ... 92**

**17 Technical data ... 94**
17.1 Performance data ... 94
17.2 Accuracy ... 95
17.2.1 Standard Liquid End ... 95
17.2.2 Self-Bleeding Liquid End ... 95
17.3 Viscosity ... 95
17.4 Material specifications ... 96
17.5 Electrical data ... 96
17.6 Temperatures ... 96
17.7 Climate ... 97
17.8 Degree of Protection and Safety Requirements ... 97
17.9 Compatibility ... 97
17.10 Shipping weight ... 98
17.11 Sound pressure level ... 98

**18 Exploded Drawings and Ordering Information ... 99**
18.1 Exploded drawings ... 99

18.2 Ordering information ..... 139
19 Dimensional Drawings..... 140
20 Diagrams for Setting the Capacity..... 149
21 Declaration of Conformity for Machinery..... 152
22 Approvals..... 153
23 Operating/Set-up Overview of the gamma/ X..... 154
24 Operating Menu of gamma/ X, Entire Unit..... 156
25 Continuous Displays and Secondary Displays..... 161
26 Installation instructions: Retrofitting Relays ..... 163
27 Index..... 165

# 1 Identity Code

| Product range gamma/ X | | | | | | | | | | | |
|---|---|---|---|---|---|---|---|---|---|---|---|
| GMXa | Type | | | | | | | | | | |
| | - - - - | Performance data and type - see nameplate | | | | | | | | | |
| | | Dosing head material | | | | | | | | | |
| | | PP | Polypropylene | | | | | | | | |
| | | NP | Clear acrylic | | | | | | | | |
| | | PV | PVDF | | | | | | | | |
| | | TT | PTFE + carbon | | | | | | | | |
| | | SS | Stainless steel | | | | | | | | |
| | | | Seal material | | | | | | | | |
| | | | B | FPM | | | | | | | |
| | | | E | EPDM | | | | | | | |
| | | | T | PTFE | | | | | | | |
| | | | F | PTFE, FDA-compliant | | | | | | | |
| | | | | Dosing head design | | | | | | | |
| | | | | 0 | Without bleed valve, without valve spring | | | | | | |
| | | | | 1 | Without bleed valve, with valve spring | | | | | | |
| | | | | 2 | With bleed valve, without valve spring | | | | | | |
| | | | | 3 | With bleed valve, with valve spring | | | | | | |
| | | | | 4 | Without bleed valve, with valve spring for more high-viscosity media | | | | | | |
| | | | | 7 | Self-bleeding with groove (SEK) | | | | | | |
| | | | | 9 | Self-bleeding with bypass (SEK) | | | | | | |
| | | | | | Hydraulic connector | | | | | | |
| | | | | | 0 | Standard connection in line with technical data | | | | | |
| | | | | | 5 | Connector for 12/6 hose, suction side standard | | | | | |
| | | | | | 9 | Connector for 10/4 hose, discharge side only, suction side standard | | | | | |
| | | | | | | Diaphragm rupture indicator | | | | | |
| | | | | | | 0 | Without diaphragm rupture indicator | | | | |
| | | | | | | 1 | With diaphragm rupture indicator, optical sensor, electrical signal | | | | |
| | | | | | | | Design | | | | |
| | | | | | | | 0 | Hous. RAL5003 / Hood RAL2003 | | | |
| | | | | | | | M | modified | | | |
| | | | | | | | | Logo | | | |
| | | | | | | | | 0 | with ProMinent logo | | |
| | | | | | | | | | Electrical connection | | |
| | | | | | | | | | U | 100-230 V ± 10%, 50/60 Hz | |
| | | | | | | | | | | Cable and plug | |
| | | | | | | | | | | A | 2 m European |
| | | | | | | | | | | B | 2 m Swiss |
| | | | | | | | | | | C | 2 m Australian |

| Product range gamma/ X | | | |
|---|---|---|---|
| D | 2 m USA / 115 V | | |
| E | 2 m Great Britain | | |
| 1 | 2 m open end | | |
| .. | ... | | |
| | **Relay, pre-set to ...** | | |
| 0 | No relay | - | |
| 1 | 1 x changeover contact 230 V – 8 A | Fault indicating relay (N/C) | |
| 4 | 2 x N/O 24 V – 100 mA | as 1 + pacing relay | |
| C | 1 x N/O 24 V – 100 mA, and 1 x 4-20 mA output | As 1 + 4-20 mA output | |
| F | With automatic bleed valve | 230 V | |
| G | with automatic bleed valve and relay output | 24 VDC | |
| .. | ... | | |
| | **Accessories** | | |
| 0 | without accessories | | |
| 1 | With foot and injection valve, 2 m suction line, 5 m metering line | | |
| 4 | Multifunctional valve and accessories | | |
| | **Control version** | | |
| 0 | Manual + external contact with pulse control | | |
| 3 | Manual + external contact with pulse control + analogue 0/4-20mA | | |
| 4 | As 0 + 4-week process timer | | |
| 5 | As 3 + 4-week process timer | | |
| C | As 3 + CANopen | | |
| R | As 3 + PROFIBUS® interface, M12 | | |
| | **Dosing monitor** | | |
| 0 | Dynamic dosing monitor | | |
| | **Remote stop / Remote control** | | |
| 0 | without Bluetooth | | |
| B | with Bluetooth | | |
| | **Language** | | |
| EN | German | | |
| EN | English | | |
| ES | Spanish | | |
| FR | French | | |
| ... | ... | | |

# 2 About this pump

## About this pump

Pumps in the gamma/ X product range are microprocessor-controlled solenoid metering pumps with the following characteristics:

- Simple adjustment of the capacity directly in l/h
- Available material combinations: PP, PVDF, clear acrylic, PTFE and stainless steel
- Special dosing head designs for gaseous and high-viscosity media
- Illuminated LC display and 3-LED display for operating, warning and error messages, visible from all sides
- Factor with external contact control 99:1 ... 1:99
- Batch operation with max. 99,999 strokes/start pulse
- Input of concentration for simple adjustment with volume-proportional metering tasks
- Stroke rate adjustment in 1 stroke/hour increments from 0 ... 12,000 strokes/h
- Electronic stroke length adjustment, continuous from 0 ... 100% (recommended 30 ... 100%)
- Connector for 2-stage level switch
- External control via 0/4-20 mA standard signal with adjustable assignment of signal value to stroke rate
- Optional 4-20 mA output for remote transmission of stroke length and stroke rate
- Universal power supply unit 100 V - 230 V, 50/60 Hz
- Optional 230 V relay module, can also be retrofitted easily and securely
- Optional 24 V combined relay, can also be retrofitted easily and securely

The hydraulic parts of the gamma/ X are identical to those of the Beta® (not with types 0220, 0424 and 0245).

# 3 Safety Chapter

**Identification of safety notes**

The following signal words are used in these operating instructions to denote different severities of danger:

| Signal word | Meaning |
|---|---|
| WARNING | Denotes a possibly dangerous situation. If this is disregarded, you are in a life-threatening situation and this can result in serious injuries. |
| CAUTION | Denotes a possibly dangerous situation. If this is disregarded, it could result in slight or minor injuries or material damage. |

**Warning signs denoting different types of danger**

The following warning signs are used in these operating instructions to denote different types of danger:

| Warning signs | Type of danger |
|---|---|
| | Warning – automatic start-up. |
| | Warning – high-voltage. |
| | Warning – danger zone. |

**Intended Use**

- Only use the pump to meter liquid feed chemicals.
- Only use the pump after it has been correctly installed and started up in accordance with the technical data and specifications contained in the operating instructions.
- Observe the general limitations with regard to viscosity limits, chemical resistance and density - see also ProMinent resistance list in the Product Catalogue or at www.prominent.com!
- All other uses or modifications are prohibited.
- The pump is not intended for the metering of gaseous media and solids.
- The pump is not intended for the metering of flammable media without implementing suitable protective measures.
- The pump is not intended for the metering of explosive media.
- The pump is not intended for operation in areas at risk from explosion.
- The pump is not intended for exterior applications without the implementation of suitable protective measures.
- The pump should only be operated by trained and authorised personnel, see the following "Qualifications" table.
- You are obliged to observe the information contained in the operating instructions at the different phases of the unit's service life.

## Safety information

WARNING!

**Warning about personal and material damage**

The pump can start to pump, as soon as it is connected to the mains voltage.

– Install an emergency cut-off switch in the pump power supply line or integrate the pump in the emergency cut-off management of the system.

WARNING!

**Warning of personal injury and material damage**

The pump can start pumping as soon as it has cooled down after the error *„temperature“*.

– Take this into account with the pump and your installation.

WARNING!

**Danger of electric shock**

A mains voltage may exist inside the pump housing.

– If the pump housing has been damaged, you must disconnect it from the mains immediately. It may only be returned to service after an authorised repair.

WARNING!

**Warning of hazardous feed chemical**

Should a dangerous feed chemical be used: it may escape from the hydraulic components when working on the pump, material failure or incorrect handling of the pump.

– Take appropriate protective measures before working on the pump (e.g. safety glasses, safety gloves, ...). Adhere to the material safety data sheet for the feed chemical.
– Drain and flush the liquid end before working on the pump.

WARNING!

**Fire danger**

When pumping inflammable media the operator must take suitable safety precautions.

WARNING!

**Danger from hazardous substances!**

Possible consequence: Fatal or very serious injuries.

Please ensure when handling hazardous substances that you have read the latest safety data sheets provided by the manufacture of the hazardous substance. The actions required are described in the safety data sheet. Check the safety data sheet regularly and replace, if necessary, as the hazard potential of a substance can be re-evaluated at any time based on new findings.

The system operator is responsible for ensuring that these safety data sheets are available and that they are kept up to date, as well as for producing an associated hazard assessment for the workstations affected.

CAUTION!

**Warning of feed chemical spraying around**

Feed chemical can spray out of the hydraulic components if they are manipulated or opened due to pressure in the liquid end and adjacent parts of the system.

- Disconnect the pump from the mains power supply and ensure that it cannot be switched on again by unauthorised persons.
- Depressurise the system before commencing any work on hydraulic parts.

CAUTION!

**Warning of feed chemical spraying around**

The metering pump can generate a multiple of its rated pressure. Hydraulic parts can rupture if a discharge line is blocked.

- Correctly install a relief valve in the discharge line downstream of the metering pump.

CAUTION!

**Warning of feed chemical spraying around**

An unsuitable feed chemical can damage the parts of the pump that come into contact with the chemical.

- Take into account the resistance of the wetted materials and the ProMinent Resistance List when selecting the feed chemical - see the ProMinent Product Catalogue or visit ProMinent.

CAUTION!

**Danger of injury to personnel and material damage**

The use of untested third party components can result in injury to personnel and material damage.

- Only fit parts to metering pumps that have been tested and recommended by ProMinent.

**CAUTION!**

**Danger from incorrectly operated or inadequately maintained pumps**

Danger can arise from a poorly accessible pump due to incorrect operation and poor maintenance.

– Ensure that the pump is accessible at all times.
– Adhere to the maintenance intervals.

**CAUTION!**

**Danger from incorrect dosing**

The metering behaviour of the pump changes if a different liquid end size is fitted.

– Reprogram the pump in the *„Menu / Information ➔ Settings ➔ System ➔ Change head type“* menu.

**CAUTION!**

**Warning against illegal operation**

Observe the regulations that apply where the device is installed.

## Isolating protective equipment

- Covers for the slots for relays and optional modules - see the chapter entitled "Overview of Equipment and Control Elements"

Customers should only remove the cover for the slots for relays and optional modules and/or a relay or optional module in line with the supplementary instructions for the relays and optional modules.

Customer should only remove the dosing head in accordance with the "Repair" chapter.

Only the ProMinent Service department is authorised to open the housing and the hood (housing the control elements).

## Information in the event of an emergency

In an emergency, either disconnect the mains plug, press *[Start/Stop]* or press the Emergency Stop switch installed on the customer's side or disconnect the pump from the mains/power supply in line with the Emergency Stop management guidelines for your system.

If feed chemical escapes, also ensure that the pump's hydraulic environment is at atmospheric pressure. Adhere to the material safety data sheet for the feed chemical.

## Qualification of personnel

| Task | Qualification |
|---|---|
| Storage, transport, unpacking | Instructed person |
| Assembly | Technical personnel, service |
| Planning the hydraulic installation | Qualified personnel who have a thorough knowledge of metering pumps |
| Hydraulic installation | Technical personnel, service |
| Installation, electrical | Electrical technician |
| Operation | Instructed person |
| Maintenance, repair | Technical personnel, service |

| Task | Qualification |
|---|---|
| Decommissioning, disposal | Technical personnel, service |
| Troubleshooting | Technical personnel, electrical technician, instructed person, service |

Explanation of the table:

Qualified personnel

A qualified employee is deemed to be a person who is able to assess the tasks assigned to him and recognise possible dangers based on his/her technical training, knowledge and experience, as well as knowledge of pertinent regulations.

Note:

A qualification of equal validity to a technical qualification can also be gained by several years of employment in the relevant field of work.

Electrical technician

An electrical technician is able to complete work on electrical systems and recognise and avoid possible dangers independently based on his/her technical training and experience, as well as knowledge of pertinent standards and regulations.

The electrical technician should be specifically trained for the working environment in which he is employed and know the relevant standards and regulations.

An electrical technician must comply with the provisions of the applicable statutory directives on accident prevention.

Instructed person

An instructed person is deemed to be a person who has been instructed and, if required, trained in the tasks assigned to him/her and possible dangers that could result from improper behaviour, as well as having been instructed in the required protective equipment and protective measures.

Service

The Service department refers to service technicians, who have received proven training and have been authorised by ProMinent to work on the system.

Sound pressure level

Sound pressure level LpA < 70 dB according to EN ISO 20361

at maximum stroke length, maximum stroke rate, maximum back pressure (water)

# 4 Storage, Transport and Unpacking

## Safety Information

**WARNING!**

Only return metering pumps for repair in a cleaned state and with a flushed liquid end - refer to "Decommissioning!

Only return metering pumps with a completed Decontamination Declaration form. The Decontamination Declaration constitutes an integral part of an inspection / repair order. A unit can only be inspected or repaired when a Declaration of Decontamination Form is submitted that has been completed correctly and in full by an authorised and qualified person on behalf of the pump operator.

The "Decontamination Declaration Form" can be found on our homepage.

**CAUTION!**

**Danger of material damage**

The device can be damaged by incorrect or improper storage or transportation!

- The unit should only be stored or transported in a well packaged state - preferably in its original packaging.
- The packaged unit should also only be stored or transported in accordance with the stipulated storage conditions.
- The packaged unit should be protected from moisture and the ingress of chemicals.

## Ambient conditions

Ambient conditions - refer to "Technical Data" chapter.

## Scope of delivery

Compare the delivery note with the scope of delivery:

- Metering pump with mains cable
- Connector kit for hose/pipe connection (optional)
- Product-specific operating instructions with EC Declaration of Conformity
- Optional accessories

# 5 Overview of Equipment and Control Elements

## 5.1 Overview of equipment

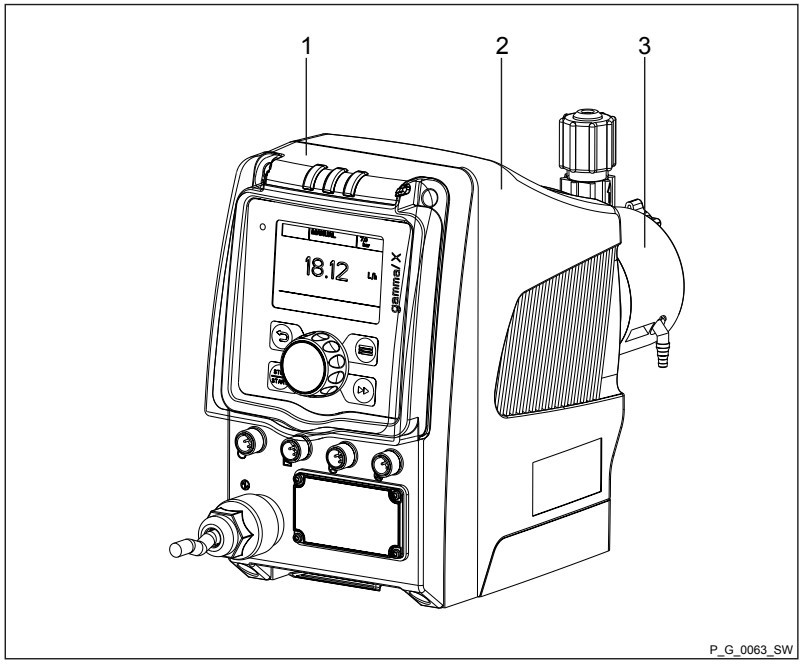


*Fig. 2: Overview of equipment, complete*

1 Control unit
2 Drive unit
3 Liquid end

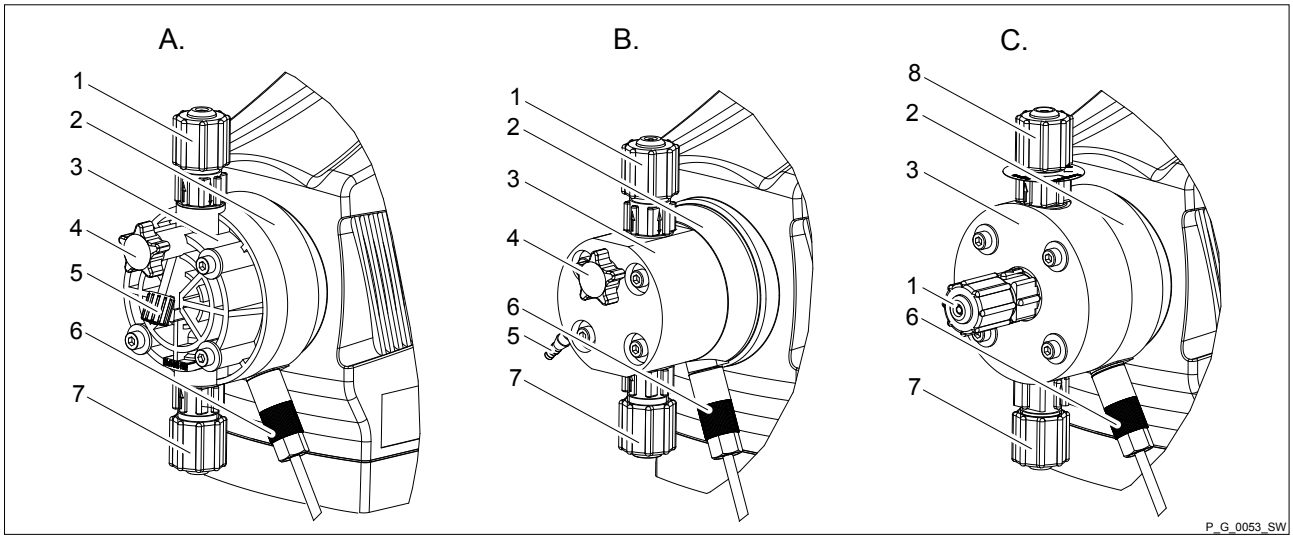


*Fig. 3: A. Liquid end with PV bleed valve; B. Liquid end with NP bleed valve; C. Self-bleeding liquid end (SEK)*

1 Discharge valve
2 Backplate
3 Dosing head
4 Bleed valve
5 Bypass hose sleeve
6 Diaphragm rupture indicator (optional)
7 Suction valve
8 Bleed valve, self-bleeding

***Self-bleeding liquid ends (SER)***

*Externally self-bleeding liquid ends with groove (SER) look identical to liquid ends with bleed valve.*

## 5.2 Control elements

Control elements, overview

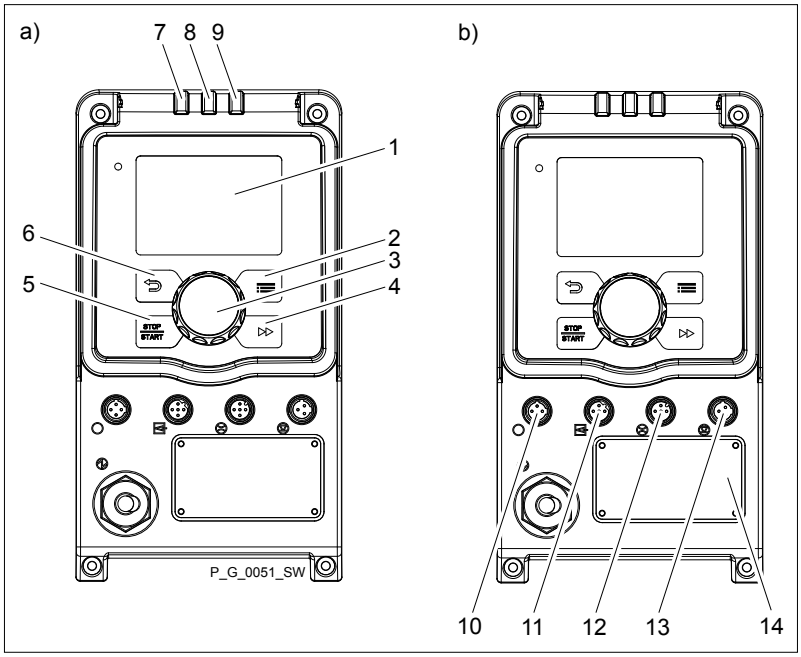


*Fig. 4*

1 LCD screen
2 *[Menu]* key
3 Clickwheel
4 *[Priming]* key
5 *[STOP/START]* key
6 *[Back]* key
7 Fault indicator (red)
8 Warning indicator (yellow)
9 Operating indicator (green)
10 "Diaphragm rupture indicator" terminal
11 "External control" terminal
12 "Dosing monitor" terminal
13 "Level switch" terminal
14 Slot for relays and optional modules

### 5.2.1 Control elements

*Use this overview to familiarise yourself with the keys and the other control elements on the pump!*

**Pressure display, identifier and fault displays on the LCD screen**

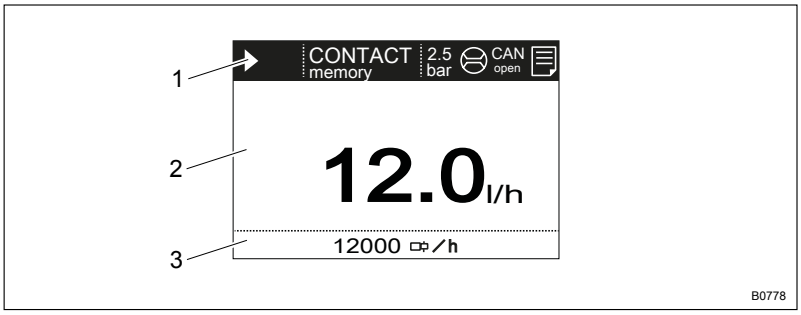


*Fig. 5: Construction of continuous display*

1 Status bar
2 Continuous display, central area
3 Secondary display

Refer to the chapter entitled "Main Displays and Secondary Displays" in the Appendix for the different main displays and secondary displays.

The LCD screen supports the operation and adjustment of the pump by providing different information and identifiers:

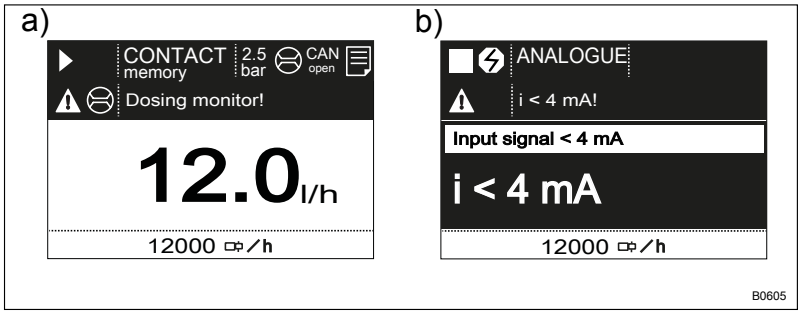


*Fig. 6: a) Continuous display with warning message; b) Continuous display with fault message. Explanation of the symbols in the following tables.*

The above Figure, Part a) shows that:

- The pump is in operation
- Is in *„Contact“* operating mode with "memory" stroke memory.
- The average system pressure is 2.5 bar
- A dosing monitor is connected
- A CAN module is being used
- A log entry has been made
- A warning message for the *„dosing monitor“* is pending
- The capacity of 12.0 l/h has been set
- The stroke rate is 12,000 strokes / h

### Pressure display

| Display | Meaning |
|---|---|
| 2.5 bar | Displays the average system pressure |

### Identifier and error displays:

| Identifier | Meaning |
|---|---|
| ▶ | The pump is working or waiting for a starting signal. |
| ■ ✋ | The pump was manually stopped using the [STOP/START] key. |
| ■ ‖ | The pump was remotely stopped (Pause) - via the "External" terminal. |
| ■ ϟ | The pump was stopped by an error. |

| Identifier | Meaning |
|---|---|
| | Only with cyclical batch metering: the pump waits for the next cycle. |
| | Only with *„Access. protect“*: the pump software is locked. |
| *„AUX“* | The pump is currently pumping at auxiliary capacity and/or auxiliary frequency. |
| *„memory“* | Only in *„CONTACT“* and *„BATCH“* operating modes:<br>The auxiliary function "Stroke memory" has been set. |
| | The pump is in *„ANALOGUE“* operating mode.<br>The *„Curve* ➔ *linear“* type of processing is set. |
| | The pump is in *„ANALOGUE“* operating mode.<br>The *„Curve* ➔ *Upper side band“* type of processing is set. |
| | *„Metering* ➔ *Discharge stroke* ➔ *optimum“* metering profile has been set. |
| | *„Metering* ➔ *Discharge stroke* ➔ *fast“* metering profile has been set. |
| | *„Metering* ➔ *Discharge stroke* ➔ *sine mode“* metering profile has been set. |
| | *„Metering* ➔ *Discharge stroke* ➔ *continuous“* metering profile has been set. |
| | *„Metering* ➔ *Discharge stroke* ➔ *DFMa“* metering profile has been set. |
| | *„Metering* ➔ *Discharge stroke* ➔ *normal“* metering profile has been set. |
| | *„Metering* ➔ *Discharge stroke* ➔ *HV1“* metering profile has been set. |
| | *„Metering* ➔ *Discharge stroke* ➔ *HV2“* metering profile has been set. |
| | *„Metering* ➔ *Discharge stroke* ➔ *HV3“* metering profile has been set. |
| | A dosing monitor "Flow Control" is connected. |
| | A diaphragm rupture indicator is connected. |

| Identifier | Meaning |
|---|---|
| | The pump has created a log about the operation. |
| | The pump is in the *„Menu“* (Set up). |

*Further explanations can be found in the "Trouble-shooting" chapter.*

*The pump only shows the metering volume and the capacity in the calibrated state in l or l/h or in gal or gal/h.*

## 5.2.2 Key functions

| Key | Application | In the continuous displays | In the menu |
|---|---|---|---|
| *[Back]* | press | - | Move back to the previous menu point (or a continuous display) - without saving |
| *[STOP/ START]* | press | Stop pump, | Stop pump, |
| | | Start pump | Start pump |
| *[Menu key]* | press | Move to the menu | Move back to a continuous display |
| *[Priming key]* | press | Priming * | Priming * |
| *[Clickwheel]* | press | Start batch (only in *„Batch“* operating mode)<br>Acknowledge errors | Move to next menu option (or a continuous display)<br>Confirm entry and save |
| *[Clickwheel]* | turn | Switch between the continuous displays | Change figure or change selection |

** When priming the pump does not run at maximum stroke rate.*

*If [Priming] is pressed in „Stop“ state, then [Priming] has top priority as long as the button is pressed.*

*Refer to the "Set-up Basics" chapter to adjust figures*

# 6 Functional Description

## 6.1 Liquid End

The dosing process is performed as follows: The diaphragm is pressed into the dosing head; the pressure in the dosing head closes the suction valve and the feed chemical flows through the discharge valve out of the dosing head. The diaphragm is now drawn out of the dosing head; the discharge valve closes due to the negative pressure in the dosing head and fresh feed chemical flows through the suction valve into the dosing head. One cycle is completed.

## 6.2 Drive unit

The diaphragm is driven by an electromagnet, controlled by an electronic control.

**Drive technology**

The drive technology on the gamma/ X enables the timed progress of the flow to be precisely matched to the requirements of the particular application.

This ensures that the user can set the optimum **discharge stroke** for his application, as required:

| Pos.* | Discharge stroke | Application |
|---|---|---|
| A. | *„optimum“* | For maximum accuracy when metering and the very best results with internal pressure measurement and special functions. |
| B. | *„fast“* | For as fast a discharge stroke as possible - the duration of the discharge stroke is dependent on the stroke rate. |
| C. | *„Sine mode“* | For a long, sine-shaped discharge stroke - the duration of the discharge stroke is dependent on the stroke rate. |
| D. | *„continuous“* | For a continuous discharge stroke e.g. for bottling processes. The duration of the discharge stroke is dependent on the stroke rate. |
| E. | *„DFMa“* | For optimum operation with a flow meter DulcoFlow® DFMa. |

* see following drawing.

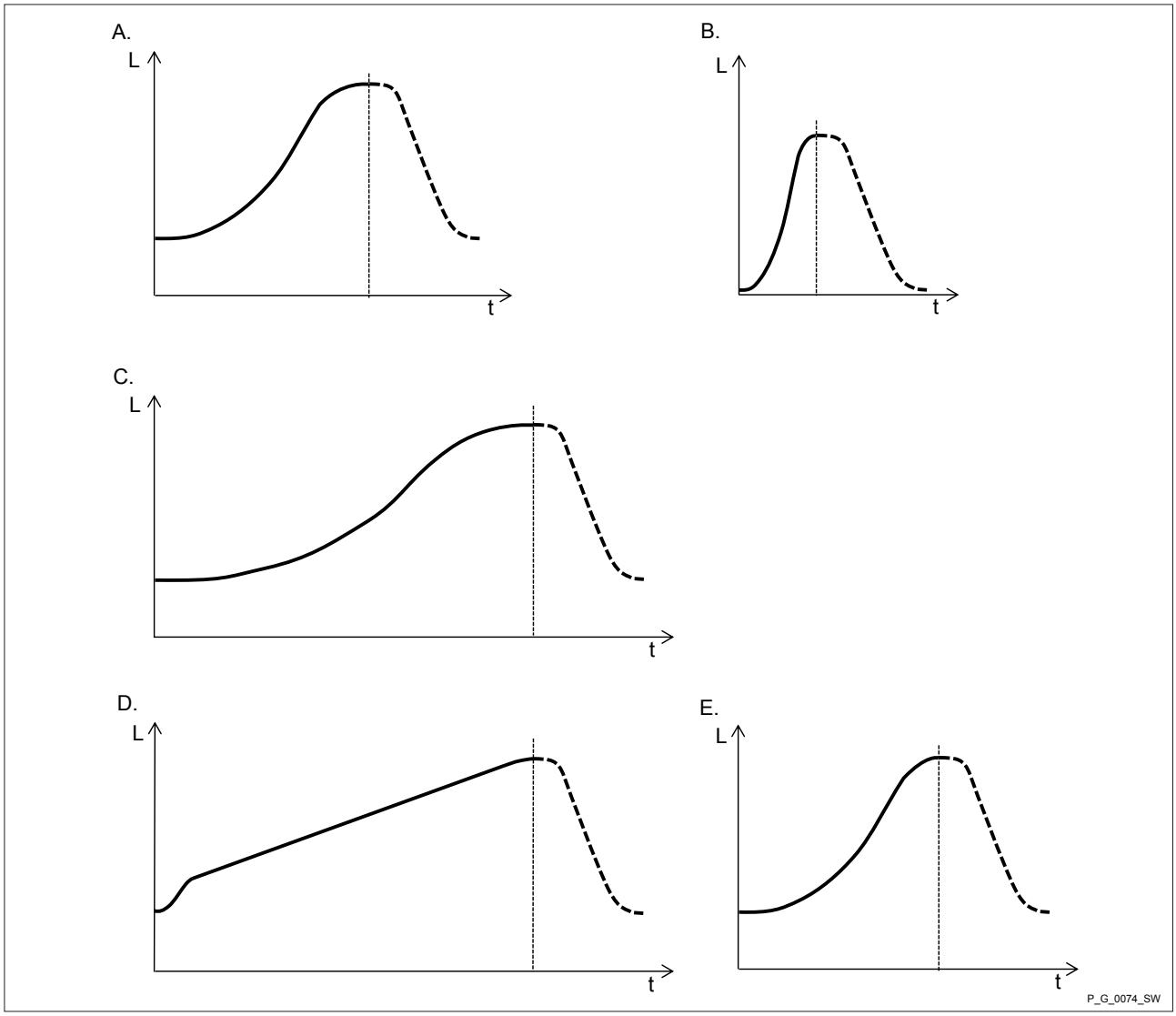


*Fig. 7: Discharge stroke metering profiles with stroke L and time t (suction stroke shown as a dotted line)*

It is possible to selectively also slow the **suction stroke** with all these metering profiles for the discharge stroke - see . In this way, it is possible to prevent the main cause of inaccurate metering with high viscosity feed chemicals, namely the incomplete filling of the liquid end. With gaseous feed chemicals, the slow suction stroke prevents cavitation and consequently increases dosing precision.

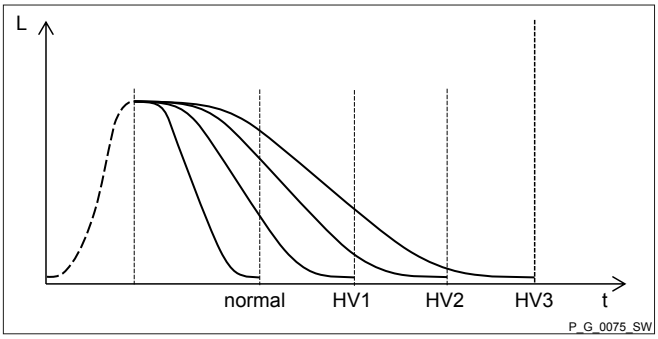


*Fig. 8: Suction stroke metering profiles with stroke L and time t*

| | |
|---|---|
| Normal | Normal suction stroke |
| HV1 | Suction stroke for viscous feed chemical |
| HV2 | Suction stroke for average viscosity feed chemical |
| HV3 | Suction stroke for high-viscosity feed chemical |

Oscillations in the back pressure in the metering line, which could lead to undesirable variations in the metering volume, are automatically compensated for by the power end/drive. This results in **dosing precision**, which otherwise could only be achieved with complex control circuits.

## 6.3 Capacity

The capacity set regulates the pump even in *„Automatic“* mode (not with SEK dosing heads).

By contrast, in conventional mode, the stroke length and stroke rate determine the capacity. The stroke length can be adjusted between 0 and 100% via the continuous display or the menu. A metering volume of between 30 to 100% is reproduced as being technically sensible (SEK type: 50 - 100%)! The stroke rate can be set via the menu (not in "Analogue" operating mode) within a range of 0 - 12,000 strokes/h.

## 6.4 Self-Bleeding

**SER types**

Self-bleeding liquid ends without bypass are capable of independent priming when a discharge line is connected and diverting any air pockets present into the discharge line. During operation they are also capable of conveying away gases which are produced, independently of the operating pressure in the system.

**SEK types**

Self-bleeding liquid ends with ball are capable of independent priming when a discharge line is connected and diverting any air pockets present via a bypass. During operation they are also capable of conveying away gases which are produced, independently of the operating pressure in the system. It is also possible to meter precisely under atmospheric pressure due to the integral back pressure valve.

## 6.5 Operating modes

Operating modes are selected via the "Operating modes" menu.

Refer to the "Hierarchy of Operating Modes, Functions and Fault Statuses" for the order of the various operating modes, functions and fault statuses.

**"Manual" operating mode**

*„Manual“* operating mode permits you to operate the pump manually.

**"Contact" operating mode**

This operating mode provides the option of controlling the pump externally by means of potential-free contacts (e.g. by means of a contact water meter). The "Pulse Control" option enables you to preselect the number of strokes (a scaling or transfer factor of 0.01 to 99.99) in the *„Settings“* menu.

**"Batch" operating mode**

This operating mode provides the option of working with large transfer factors (up to 99,999). Metering can be triggered either by pressing the *[Clickwheel]* or by a pulse received via the "External control" terminal or through a contact or a semiconductor switching element. It is possible to pre-select a metering volume (batch) or a number of strokes using the *[Clickwheel]* in the *„Settings“* menu.

**"Analogue" operating mode**

The capacity and/or stroke rate is controlled via an analogue current signal via the "External control" socket. The processing of the current signal can be preselected via the control unit.

## 6.6 Functions

Refer to the "Hierarchy of Operating Modes, Functions and Fault Statuses" for the order of the various operating modes, functions and fault statuses.

The following functions can be selected using the *„Settings“* menu:

**"Calibrate" function**

The pump can also be operated in a calibrated state in all operating modes if it is to meter extremely precisely. This can be useful with very viscous feed chemicals but less so with feed chemicals with a similar consistency to water. Calibration is retained over the entire stroke rate range and over a stroke length range from 0 - 100%.

**"Auxiliary capacity" / "Auxiliary frequency" function**

This facilitates the switch-over to a fixed adjustable capacity / stroke rate in the *„menu“* via the "External control" terminal.

**"Bleed " function**

This permits simple bleeding - without the need for an additional bleed valve. The pump works at maximum stroke rate based on the selected signal in order to transport gas bubbles out of the liquid end.

**"Timer" function**

This permits a simple timer program to be set up without the need for an additional timer module.

The following functions are available as standard:

**"Flow" function**

It monitors the flow after every single stroke, if a dosing monitor is connected and if *„Fast“* is set under *„Settings* ➔ *Metering* ➔ *Discharge stroke“* or *„DFMa“* (for the DulcoFlow®). The number of defective strokes, after which the pump is switched off, can be set in the *„Settings“* menu.

**"Level switch" function**

Information about the liquid level in the dosing tank is reported to the pump. A two-stage level switch has to be fitted for this purpose, which is connected to the "Level switch" terminal.

**"Pause" function**

The pump can be remotely stopped via the "External Control" terminal.

**"Stop" function**

The pump can be stopped without disconnecting it from the mains/power supply by pressing the **)** *[STOP/START]* key.

**"Priming" function**

Priming can be triggered by pressing **)** *[Priming]*.

## 6.7 Relay (Options)

The pump has several connecting options available:

**"Fault indicating relay" option**

The relay can close a connected power circuit (e.g. for an alarm horn) in the event of warnings or fault messages (e.g. *„Warning level“*).

The relay can be retrofitted through the slot in the front of the pump - refer to the installation instructions for "Retrofitting relays".

**"Fault indicating and pacing relay" option**

This combined relay can generate a contact with each stroke via its pacing relay in addition to functioning as a fault indicating relay.

The relay can be retrofitted through the slot in the front of the pump.

**"Automatic bleed" option**

The "Automatic bleed" option is used for controlled bleeding of the liquid end, if the pump has the "Automatic bleed" option. This option can be retrofitted through the slot in the front of the pump and conversion of the dosing head.

There are two versions:

- Version with only 1 relay – to control the electric bleed valve in the dosing head.
- Version with only 2 relays – one relay to control the electric bleed valve in the dosing head and one relay free for other uses.

**"mA output" option**

The current output I signal indicates the pump's actual calculated metering volume. The relay can be retrofitted through the slot in the front of the pump.

The option also always includes a fault indicating relay or a pacing relay.

## 6.8 LED Displays

**Fault indicator (red)**

| LED display | Colour | lit | briefly goes out | flashes |
|---|---|---|---|---|
| Fault indicator | red | A fault message is pending | - | undefined operating status |
| Warning indicator | yellow | A warning message is pending | - | - |
| Operating indicator | green | The pump is ready for operation | At each stroke | Stroke rate below 30 strokes / min |

## 6.9 Hierarchy of Operating Modes, Functions and Fault Statuses

The different operating modes, functions and fault statuses have a different effect on whether and how the pump reacts.

The following list shows the order:

1. - Stop
2. - Priming key
3. - Error, Pause, Level
4. - Auxiliary capacity / Auxiliary frequency
5. - Field bus
6. - Manual, Analogue, Contact, Batch

Comments:

re 1 - "Stop" stops everything.

re 2 - "Priming" can take place in any mode of the pump (providing it is functioning).

re 3 - "Error", "Pause" and "Level" stop everything apart from "Priming".

re 4 - The commands from a field bus always have priority over "Auxiliary capacity" and/or "Auxiliary frequency" and the capacity / stroke rate specified by an operating mode listed under 6.

re 5 - The "Auxiliary capacity" and/or "Auxiliary frequency" always has priority over the capacity / stroke rate specified by an operating mode listed under 5.

# 7 Assembly

*Please refer to the online version of the operating instructions on our website for the right dimensional drawings for the pump and mounting plate.*

*Compare the dimensions on the dimensional drawing with those of the pump and/or mounting plate.*

CAUTION!

**Danger from incorrectly operated or inadequately maintained pumps**

Danger can arise from a poorly accessible pump due to incorrect operation and poor maintenance.

– Ensure that the pump is accessible at all times.
– Adhere to the maintenance intervals.

***Capacity too low***

*The liquid end valves can be disturbed by vibrations.*

– *Secure the metering pump so that no vibrations can occur.*

***Capacity too low***

*If the valves of the liquid end are not vertical, they cannot close correctly.*

– *Ensure that the suction and discharge valves are upright (with self-bleeding liquid ends: the bleed valve).*

*Several metering pumps can be arranged closely together as required.*

1. To remove the mounting plate, press down the black flap below the front of the pump a little and press the mounting plate backwards.
2. Assemble the mounting plate on a **level** and load-bearing base surface (with a minimum of 2 bolts and 2 washers!).

   You can also assemble the mounting plate on a **vertical**, level and load-bearing base surface (using 3 bolts and 3 washers!). You then need to rotate the liquid end (vertical valve position!)

   You can also assemble the mounting plate on a **wall bracket** (accessories). 3 alignments are possible.
3. Lock the foot of the metering pump into the mounting plate – see Fig. 9.

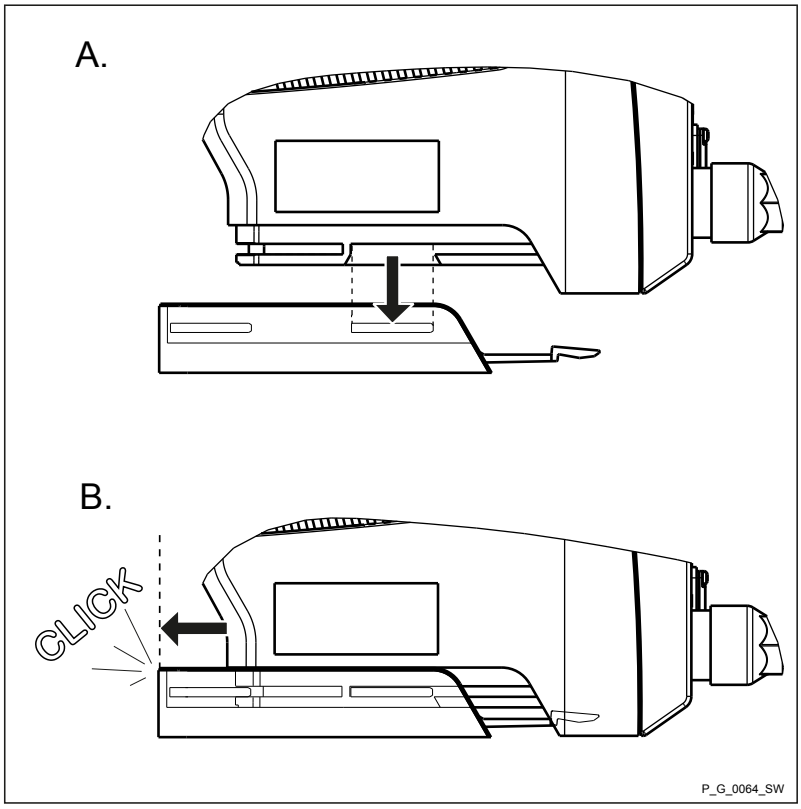


*Fig. 9*

Suggested bolts and washers for fixing the assembly foot

| Bolt | Type | Size | Washer |
|---|---|---|---|
| | DELTA-PT bolt | 50 (WN5412/5452) | A5.3 (DIN 125) |
| | PT bolt | 50 (WN1441/1411 KA/B) | - |
| | Flat-head bolt | M5 (DIN EN ISO 7045) | A5.3 (DIN 125) |
| | Allen bolt/ | M5 (DIN EN ISO 4762) | A5.3 (DIN 125) |

# 8 Installation, hydraulic

Safety information

CAUTION!

**Warning of feed chemical spraying around**

An unsuitable feed chemical can damage the parts of the pump that come into contact with the chemical.

– Take into account the resistance of the wetted materials and the ProMinent Resistance List when selecting the feed chemical - see the ProMinent Product Catalogue or visit ProMinent.

CAUTION!

**Warning of feed chemical spraying around**

Pumps which are not fully installed hydraulically can eject feed chemicals from the outlet openings of the discharge valves as soon as they are connected to the mains.

– The pump must first be hydraulically installed and then electrically.
– In the event that you have failed to do so, press the *[STOP/START]* button or press the emergency-stop switch.

CAUTION!

**Warning of feed chemical spraying around**

Feed chemical can spray out of the hydraulic components if they are manipulated or opened due to pressure in the liquid end and adjacent parts of the system.

– Disconnect the pump from the mains power supply and ensure that it cannot be switched on again by unauthorised persons.
– Depressurise the system before commencing any work on hydraulic parts.

CAUTION!

**Danger from rupturing hydraulic components**

Peak loads during the dosing stroke can cause the maximum permissible operating pressure of the system and pump to be exceeded.

– The discharge lines are to be properly designed.

CAUTION!

**Danger of injury to personnel and material damage**

The use of untested third party components can result in injury to personnel and material damage.

– Only fit parts to metering pumps that have been tested and recommended by ProMinent.

## 8.1 Installing hose lines

### 8.1.1 Installation of Metering Pumps Without Bleed Valve

Safety information

CAUTION!

Warning of feed chemical spraying around

The pipes can loosen or rupture if they are not installed correctly.

- Route all hose lines so they are free from mechanical stresses and kinks.
- Only use original hoses with the specified hose dimensions and wall thicknesses.
- Only use clamp rings and hose nozzles that are intended for the hose diameter in question to ensure the long service life of the connections.

CAUTION!

Danger from rupturing hydraulic components

Hydraulic components can rupture if the maximum permissible operating pressure is exceeded.

- Always adhere to the maximum permissible operating pressure of all hydraulic components - please refer to the product-specific operating instructions and system documentation.
- Never allow the metering pump to run against a closed shut-off device.
- Install a relief valve.

CAUTION!

Hazardous feed chemicals can escape

Hazardous or extremely aggressive feed chemicals can leak out when using conventional bleeding procedures with metering pumps.

- Install a bleed line with return line into the storage tank.

CAUTION!

Hazardous feed chemicals can escape

Hazardous or extremely aggressive feed chemicals can leak out in the event that the metering pump is removed from the installation.

- Install a shut-off valve on the metering pump's pressure and discharge sides.

CAUTION!

Uncontrolled flow of feed chemical

Feed chemical can press through a stopped metering pump if there is back pressure.

- Use an injection valve or a vacuum breaker.

CAUTION!

Uncontrolled flow of feed chemical

Feed chemicals can leak through the metering pump in an uncontrolled manner in the event of excessive priming pressure.

– Do not exceed the maximum permissible priming pressure for the metering pump.

*Align the pipes so that the metering pump and the liquid end can simply be removed from the side if necessary.*

### Installing hose lines - PP, NP, PV, TT designs

1. Cut off the ends of the hoses at right angles.
2. Pull the union nut (2) and clamp ring (3) over the hose (1) - see figure Fig. 10.
3. Push the hose end (1) up to the stop over the nozzle (4) and widen, if necessary.

*Ensure that the O-ring and flat seal (5) is properly fitted to the valve (6).*

*Never re-use used PTFE seals.*

*An installation sealed in this way is not watertight. This type of seal is permanently distorted when subjected to pressure.*

*In order to enable it to be distinguished from the EPDM flat seal, the FPM flat seal PV design has a dot.*

4. Place the hose (1) with the nozzle (4) onto the valve (6).
5. Clamp the hose connector: Tighten the union nut (2) while simultaneously pressing on the hose (1).
6. Re-tighten the hose connector: Pull on the hose line (1) briefly, which is fastened to the dosing head and then re-tighten the union nut (2).

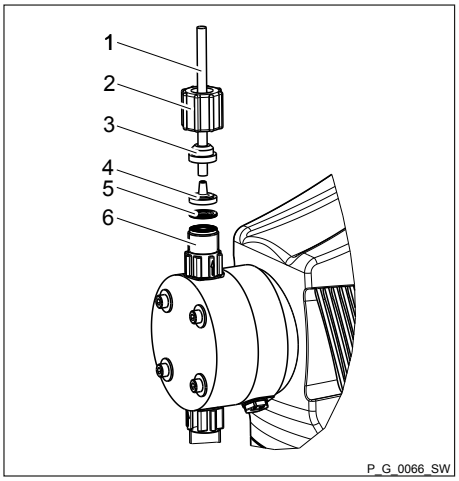


*Fig. 10: PP, NP, PV and TT designs*

1 Hose
2 Union nut
3 Clamp ring
4 Nozzle
5 O-ring or flat seal
6 Valve

### Installing stainless steel pipe - SS design

1. Pull the union nut (2) and clamp rings (3, 4) over the pipe (1) with approx. 10 mm overhang - see Fig. 11.
2. Insert the pipe (1) up to the stop in the valve (5) and then withdraw 1...2 mm.
3. Tighten the union nut (2).

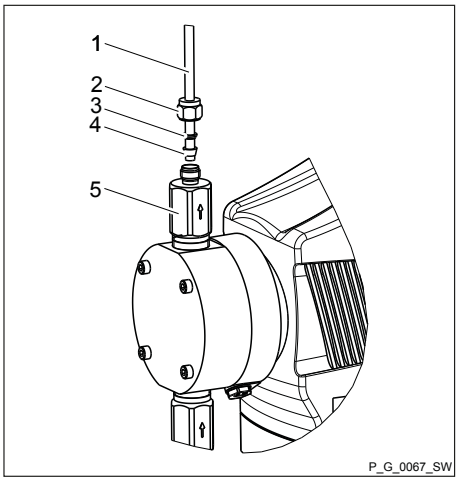


*Fig. 11: SS design with pipe*

1 pipe
2 Union nut
3 Rear clamp ring
4 Front clamp ring
5 Valve

Installing hose lines - SS design

CAUTION!

Warning of feed chemical spraying around

Connections can come loose in the event that hose lines are installed incorrectly on stainless steel valves.

– Only use PE or PTFE hose lines.
– In addition, insert a stainless steel support insert into the hose line.

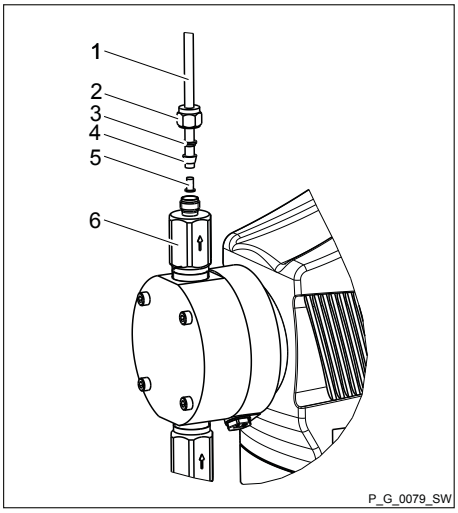


1 Hose
2 Union nut
3 Rear clamp ring
4 Front clamp ring
5 Support insert
6 Valve

*Fig. 12: SS design with hose*

## 8.1.2 Installation of Metering Pumps With Bleed Valve

Safety information

CAUTION!

– All the installation and safety notes for metering pumps without bleed valves also apply.

Installation of the return line

A return line is also connected in addition to the suction and discharge line.

1. Attach the hose line to the return hose nozzle or to the liquid end bleed valve. PVC hose, soft, 6x4 mm is recommended.
2. Feed the free end of the return line back to the storage tank.
3. Shorten the return line so that it is not immersed in the feed chemical in the storage tank.

## 8.1.3 Installation of Metering Pumps With Self-bleeding (SEK Type)

Safety information

CAUTION!

– All of the installation and safety notes for metering pumps without self-bleeding also apply.
– Do not exceed the maximum values for priming lift, priming pressure and viscosity of the feed chemical.
– Do not allow the suction side line cross-section to exceed the line cross-section on the suction valve.

*Information about priming pressure*

- *Make sure that the priming pressure on the suction end is at least equal to the return line pressure.*
- *Back pressure in the return line restricts the bleeding function.*
- *In contrast, it is possible to operate the pump with back pressure in the return line and atmospheric pressure on the suction side.*

## Installation of the return line

A return line is also connected in addition to the suction and discharge line.

- *The return line is connected to the vertical valve on the upper side of the liquid end. It is factory-labelled with a red sleeve - see Fig. 10.*
- *The discharge line is connected to the horizontal valve.*

1. Attach the hose line to the return hose nozzle or to the liquid end bleed valve. PVC hose, soft, 6x4 mm is recommended.
2. Feed the free end of the return line back to the storage tank.
3. SEK only: Insert the return line into the anti-kink device on the bleed valve and screw it in place until the anti-kink device engages.

   *The anti-kink device prevents the return line from kinking, avoiding the risk of self-bleeding failure.*

4. Shorten the return line so that it is not immersed in the feed chemical in the storage tank.

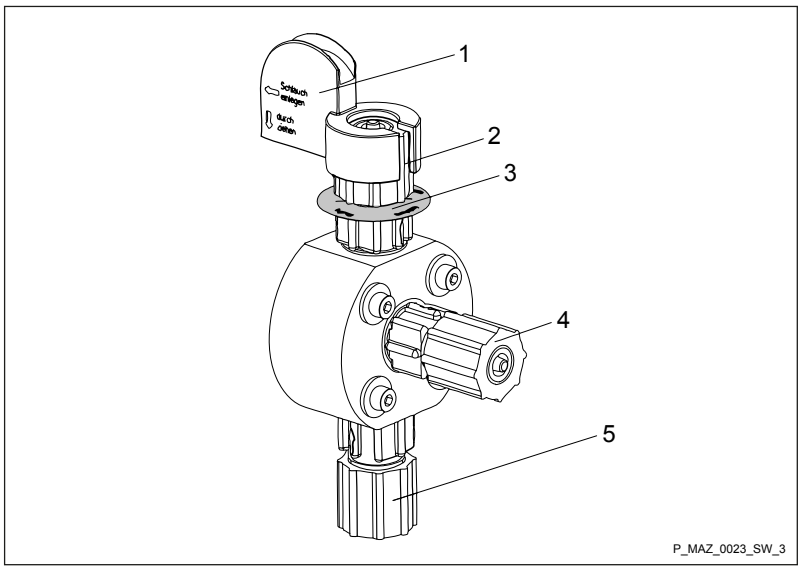


*Fig. 13: SEK liquid end*

1 Anti-kink device
2 Bleed valve for the return line into the storage tank, 6/4 mm
3 Red sleeve
4 Discharge valve for discharge line to the injection point, 6/4 - 12/9 mm
5 Suction valve for suction line in the storage tank, 6/4 - 12/9 mm

## 8.2 Basic installation notes

Safety notes

**CAUTION!**

**Danger resulting from rupturing hydraulic components**

Hydraulic components can rupture if the maximum permissible operating pressure is exceeded.

- Never allow the metering pump to run against a closed shut-off device.
- With metering pumps without integral relief valve: Install a relief valve in the discharge line.

**CAUTION!**

**Hazardous feed chemicals can escape**

With hazardous feed chemicals: Hazardous feed chemical can leak out when using conventional bleeding procedures with metering pumps.

- Install a bleed line with a return into the storage tank.

→ Shorten the return line so that it does not dip into the feed chemical in the storage tank.

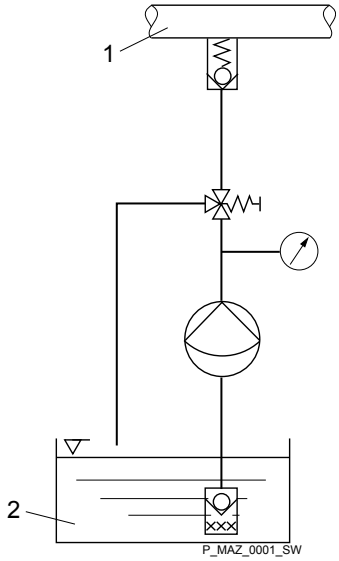


*Fig. 14: Standard installation*

1 Main line
2 Storage tank

Legend for hydraulic diagram

| Symbol | Explanation | Symbol | Explanation |
|---|---|---|---|
| | Metering pump | | Foot valve with filter meshes |
| | Injection valve | | Level switch |
| | Multifunctional valve | | Manometer |

# 9 Installation, electrical

WARNING!

Danger of electric shock

A mains voltage may exist inside the device.

– Before any work, disconnect the device's mains cable from the mains.

WARNING!

Risk of electric shock

This pump is supplied with a grounding conductor and a grounding-type attachment plug.

– To reduce the risk of electric shock, ensure that it is connected only to a proper grounding-type receptacle.

WARNING!

Risk of electric shock

In the event of an electrical accident, the pump must be quickly disconnected from the mains.

– Install an emergency cut-off switch in the pump power supply line or
– Integrate the pump in the emergency cut-off management of the system and inform personnel of the isolating option.

WARNING!

Danger of electric shock

Incompletely installed electrical options can allow moisture into the inside of the housing.

– Fit appropriate modules into the slot on the front of the pump or use the original blank cover to seal it in a leak-tight manner.

WARNING!

Danger of electric shock

A mains voltage may exist inside the pump housing.

– If the pump housing has been damaged, you must disconnect it from the mains immediately. It may only be returned to service after an authorised repair.

CAUTION!

Risk of short circuiting caused by moist pins

No moisture must reach the pins of the PROFIBUS® jack.

– A suitable PROFIBUS® plug or protective cap must be screwed onto the PROFIBUS® jack.

CAUTION!

**Material damage possible due to power surges**

Should the pump be connected to the mains power supply in parallel to inductive consumers (such as solenoid valves, motors), inductive power surges can damage the control when it is switched off.

- Provide the pump with its own contacts (Phase) and supply with voltage via a contactor relay or relay.
- Should this not be possible, then switch a varistor (part no. 710912) or an RC gate (0.22 µF/220 Ω, part no. 710802) in parallel.

CAUTION!

**Bonding of the contacts of your switching relay**

The high starting current can cause the contacts of the on-site switching relay to bond together if the mains voltage switches a solenoid metering pump on and off in a process.

- Use the switching options offered by the external socket to control the pump (functions: Pause, Auxiliary frequency or Operating modes: Contact, Batch, Analogue).
- Use a starting current limiter if it is impossible to avoid switching the pump on and off via a relay.

→ Install the pump in line with best working practice and in accordance with the operating instructions and applicable regulations.

## 9.1 Supply voltage connector - mains voltage

WARNING!

**Unexpected startup is possible**

As soon as the pump is connected to the mains, the pump may start pumping and consequently feed chemical may escape.

- Prevent dangerous feed chemicals from escaping.
- If you have not successfully prevented this, immediately press the *[STOP/START]* key or disconnect the pump from mains, e.g. via an emergency cu-off switch.

CAUTION!

If the pump is integrated into a system: Design the system so that potential hazardous situations are avoided by pumps starting up automatically subsequent to unintended power interruptions.

Connect the pump to the mains voltage using the mains cable.

## 9.2 Description of the Terminals

### 9.2.1 "External control" terminal

The "external control" terminal is a 5-pole panel terminal. It is compatible with 2- and 4-pole cables.

Only use a 5-pole cable with the "Auxiliary capacity" / "Auxiliary frequency" and "mA-input" functions.

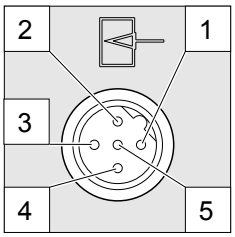


P_BE_0014_SW

*Fig. 15: Pump assignment*

Electrical interface for pin 1 "Pause" - pin 2 "External contact" - pin 5 "Auxiliary capacity / Auxiliary frequency"

| Data | Value | Unit |
|---|---|---|
| Voltage with open contacts | 5 | V |
| Input resistance | 10 | kΩ |
| Max. pulse frequency | 25 | pulse/s |
| Min. pulse duration | 20 | ms |

Control via:

- potential-free contact (load: 0.5 mA at 5 V) or
- Semiconductor switch (residual voltage < 0.7 V)

Electrical interface for pin 3 "mA input" (with identity code characteristic "Control version": 2 and 3)[1]

| Data | Value | Unit |
|---|---|---|
| Input apparent ohmic resistance, approx. | 120 | Ω |

[1] The metering pump makes its first metering stroke at approx. 0.4 mA (4.4 mA) and reaches maximum frequency at approx. 19.6 mA.

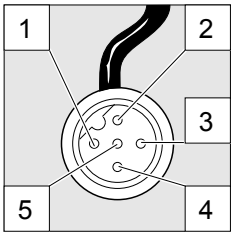


P_BE_0015_SW

*Fig. 16: Cable assignment*

| Pin | Function | 5-wire cable | 2-wire cable |
|---|---|---|---|
| 1 | Pause | brown | bridged at pin 4 |
| 2 | External contact | white | brown |
| 3 | mA input* | blue | - |
| 4 | Earth GND | black | white |
| 5 | Auxiliary capacity / Auxiliary frequency | grey | - |

* with identity code characteristic "Control version": 3

*Refer to the functional description for the sequence of functions and operating modes.*

**"Pause" function**

The pump works if:

- Pin 1 and pin 4 are connected to each other and the cable is connected.
- no cable is connected.

The pump does not work if:

- Pin 1 and pin 4 are open and the cable is connected.

*Acknowledge fault with „Pause“*

*Certain errors requiring acknowledgement can also be acknowledged using „Pause“ instead of using the [P] key. These are errors like: „Flow“, „Air lock“,„ p-“ (as soon as the conditions are in order).*

**"External contact" operating mode**

The pump performs one or more strokes if:

- Pin 2 and pin 4 are connected to each other for at least 20 ms. At the same time, pin 1 and pin 4 must also be connected to each other.

**"Analogue" operating mode**

The pump capacity and/or stroke rate can be controlled by a current signal. The current signal is connected between pin 3 and pin 4.

In addition, pin 1 and pin 4 must also be connected.

**"Auxiliary capacity" / "Auxiliary frequency" operating mode**

The pump works at a pre-set capacity / stroke rate if:

- Pin 5 and pin 4 are connected to each other. At the same time, pin 1 and pin 4 must also be connected to each other. The auxiliary capacity / auxiliary frequency is factory-preset to maximum capacity / stroke rate.

## 9.2.2 "Level switch" terminal

There is a connecting option for a 2-stage level switch with pre-warning and limit stop.

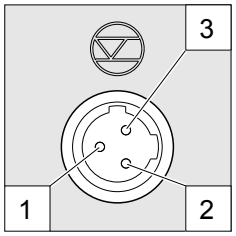


*Fig. 17: Pump assignment*

Electrical interface

| Data | Value | Unit |
|---|---|---|
| Voltage with open contacts | 5 | V |
| Input resistance | 10 | kΩ |

Control via:

- potential-free contact (load: 0.5 mA at 5 V) or
- Semiconductor switch (residual voltage < 0.7 V)

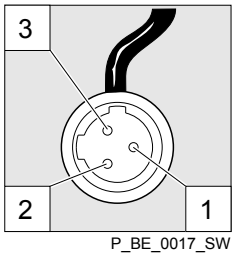


*Fig. 18: Cable assignment*

| Pin | Function | 3-wire cable |
|---|---|---|
| 1 | Earth GND | black |
| 2 | Minimum pre-warning | blue |
| 3 | Minimum limit stop | brown |

## 9.2.3 "Dosing monitor" terminal

There is a connection option for a dosing monitor.

Electrical interface

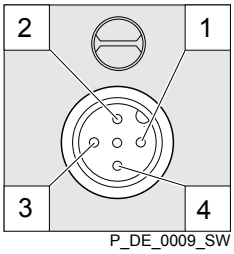


*Fig. 19: Pump assignment*

| Data | Value | Unit |
|---|---|---|
| Voltage with open contacts | 5 | V |
| Input resistance | 10 | kΩ |

Control via:

- potential-free contact (load: 0.5 mA at 5 V) or

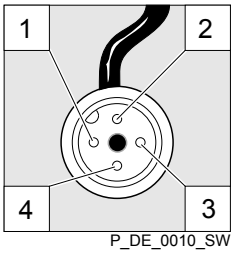


*Fig. 20: Cable assignment*

| Pin | Function | 4-wire cable |
|---|---|---|
| 1 | Power supply (5 V) | brown |
| 2 | Coding | white |
| 3 | Feedback | blue |
| 4 | Earth GND | black |

## 9.2.4 "Diaphragm rupture indicator" terminal

There is an option to connect a diaphragm rupture indicator.

Electrical interface

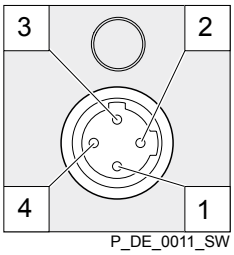


*Fig. 21: Pump assignment*

| Specification | Value |
|---|---|
| Supply voltage, approx.: | +5 V, loadable with 20 mA (current limit 150 mA) |
| Power consumption: | min. 10 mA, max. 20 mA (sensor presence detection) |
| Sensor signal: | potential-free contact (load: 0.5 mA at +5 V) or<br>Semiconductor switch (residual voltage < 0.3 V) |

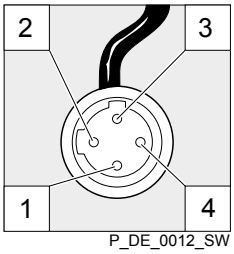


*Fig. 22: Cable assignment*

| Pin | Function | 4-wire cable |
|---|---|---|
| 1 | Power supply (5 V) | brown |
| 2 | not assigned | white |
| 3 | Sensor signal | blue |
| 4 | Earth GND | black |

## 9.2.5 Relay

### 9.2.5.1 Relay functions

gamma/ X GMXa

| Identity Code | Description | Type | Maximum voltage | Maximum current |
|---|---|---|---|---|
| 0 | no relay | - | - | - |
| 1 | Fault indicating relay | NC changeover contact | 230 V | 8 A |

| Identity Code | Description | Type | Maximum voltage | Maximum current |
|---|---|---|---|---|
| 4 | fault indicating relay +<br>Pacing relay | N/O<br>N/O | 24 V<br>24 V | 2 A<br>100 mA |
| C | fault indicating relay + 4-20 mA output | N/O | 24 V | 100 mA |
| F | Automatic bleeding | N/O | 230 V | 24 VA or 8 W |
| G | Automatic self-bleeding and relay output | N/O | 24 V DC | 24 VA or 8 W |

Relay type switches in the event of...

| Relay type* | Level<br>Warning | Level<br>low | Dosing monitor<br>Fault | Calibrated stroke length<br>Fault | Processor<br>Fault |
|---|---|---|---|---|---|
| Fault indicating relay: | X | X | X | X | X |
| Warning relay: | X | - | - | X | - |

* Can be reprogrammed in the *„Relay“* menu.

### 9.2.5.2 "Fault indicating relay" output (identity code 1)

A fault indicating relay can be ordered as an option - refer to ordering information in the appendix. It is used to emit a signal when there is a fault with the pump and for the "Liquid level low, 1st stage" warning message and "Liquid level low 2nd stage" fault message.

The fault indicating relay can be retrofitted and is operational once attached to the relay board - refer to "Retrofitting Relays" supplementary operating instructions.

The behaviour is factory-programmed. If another switching function is required, the pump can be reprogrammed in the *„Relay“* menu.

The relay can be retrofitted and operates once it is plugged into the relay board.

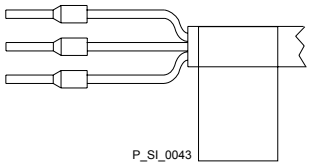


*Fig. 23: Cable assignment*

Electrical interface

| Data | Value | Unit |
|---|---|---|
| Maximum contact load at 230 V and 50/60 Hz: | 8 | A |
| Minimum mechanical lifespan: | 200,000 | switching operations |

Identity code 1

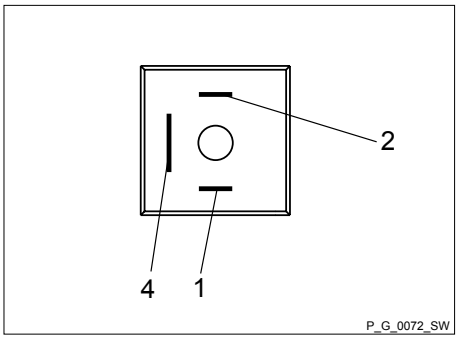


*Fig. 24: Pump assignment*

| To pin | VDE cable | Contact | CSA cable |
|---|---|---|---|
| 1 | white | NO (normally open) | white |
| 2 | green | NC (normally closed) | red |
| 4 | brown | C (common) | black |

### 9.2.5.3 Output for Other Relays (Identity code 4)

A fault indicating and a pacing relay can optionally be ordered - refer to ordering information in the appendix. The pacing output is electrically-isolated by means of an optocoupler with a semiconductor switch. The second switch is a relay (also electrically isolated).

The behaviour is factory-programmed. If another switching function is required, the pump can be reprogrammed in the *„Relay“* menu.

The fault indicating/pacing relay can be retrofitted and is operational once attached to the relay board - refer to "Retrofitting Relays" supplementary operating instructions.

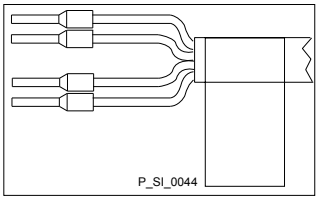


*Fig. 25: Cable assignment*

Electrical interface

for fault indicating relay output:

| Data | Value | Unit |
|---|---|---|
| Maximum contact load at 24 V and 50/60 Hz: | 2 | A |
| Minimum mechanical lifespan: | 20,000,000 | switching operations |

for semiconductor switch pacing relay:

| Data | Value | Unit |
|---|---|---|
| Max. residual voltage at $I_{off\ max}$ = 1 µA | 0.4 | V |
| Maximum current | 100 | mA |
| Maximum voltage | 24 | VDC |
| Pacing pulse duration, approx. | 100 | ms |

Identity code 4

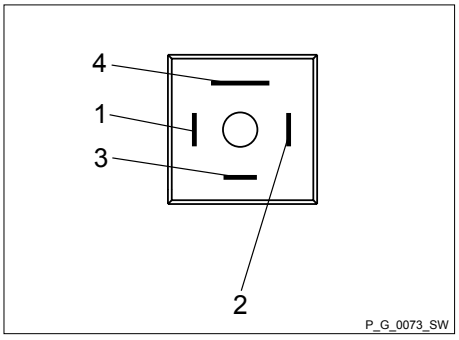


*Fig. 26: Pump assignment*

| To pin | VDE cable | Contact | Relay |
|---|---|---|---|
| 1 | yellow | NO (normally open) | other relay |
| 4 | green | C (common) | other relay |
| 3 | white | NO (normally open) | Pacing relay |
| 2 | brown | C (common) | Pacing relay |

### 9.2.5.4 Output "Current output plus relay" (identity code C)

A relay combined with a current output can optionally be ordered. The relay either switches off the pump as a fault indicating relay in the event of a fault on the pump and with "Liquid level low 1st stage" warning message and "Liquid level low 2nd stage" fault messages or is used as a pacing relay.

The behaviour is factory-programmed. If another switching function is required, the pump can be reprogrammed in the *„Relay“* menu.

In the *„ANALOG OUTPUT“* menu, the variable to be signalled by the current output can be selected.

The current output plus relay can be retrofitted and operates once it is plugged into the board.

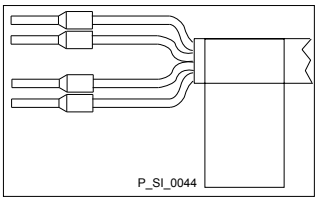


*Fig. 27: Cable assignment*

Electrical interface

for current output

| Data | Value | Unit |
|---|---|---|
| Open circuit voltage: | 8 | V |
| Current range: | 4 ... 20 | mA |
| Ripple, max.: | 80 | µA pp |
| Ripple, max.: | 250 | Ω |

for semiconductor switch ("relay"):

| Data | Value | Unit |
|---|---|---|
| Max. residual voltage at $I_{off\ max}$ = 1 µA | 0.4 | V |
| Maximum current | 100 | mA |
| Maximum voltage | 24 | VDC |
| Pacing pulse duration, approx. | 100 | ms |

Identity code c

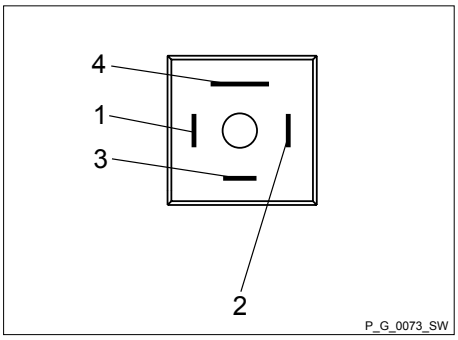


*Fig. 28: Pump assignment*

| To pin | VDE cable | Contact | Relay |
|---|---|---|---|
| 1 | yellow | "+" | Current output |
| 4 | green | "-" | Current output |
| 3 | white | NC (normally closed) or<br>NO (normally open) | Relay |
| 2 | brown | C (common) | Relay |

# 10 Basic Set-up Principles

- *Please also refer to all the overviews covering "Operating/set-up overview" and "Operating menu for gamma/ X, complete" in the appendix and the chapters "Overview of Equipment and Control Elements" and "Control Elements".*
- *The pump leaves the menu and returns to a continuous display if ) [Menu] is pressed or no key is pressed for 60 seconds.*

## 10.1 Basic Principles for Setting up the Control

*Fig. 29: Please read*

Fig. 30 shows using the "Language" example how to set up something - in turn:

- Following the displays
- The path derived from this
- The path as presented in the operating instructions

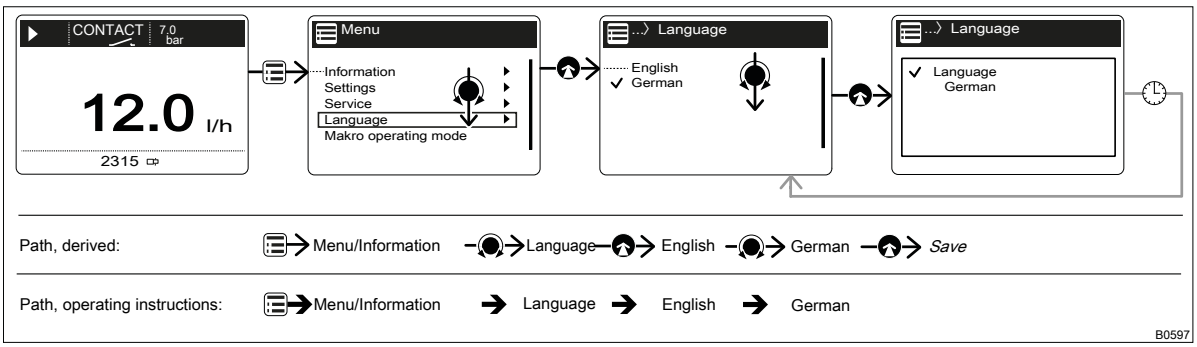


*Fig. 30: "Setting up the language": As an example of set-up and path displays*

**Legend:**

| Symbol | Explanation |
|---|---|
| | Press *[Menu]* |
| | Turn the *[Clickwheel]* |
| | Press the *[Clickwheel]* |

**"Setting up the language" in detail**

1. To access the *„Menu“*: press )*[Menu]*.
   ⇨ The cursor points to *„Information“*.
2. To switch from *„Information“* to *„Language“*: turn the *[Clickwheel]*.
3. To return to the *„Language“* menu: press the *[Clickwheel]*.
   ⇨ The cursor points to a language.
4. To switch to *„Deutsch“*: turn the *[Clickwheel]*.
5. To save: press the *[Clickwheel]*.
   ⇨ The software shows a display by way of confirmation.
   After 2 seconds, it returns to the higher-level *„Menu“*.

6. To complete the setting: press ) *[Menu]*.

   Alternatively: wait 60 seconds or exit the *„Menu“* via ) *[Menu]* or via *„End“*.

### Confirming an entry

Briefly press the *[Clickwheel]*.

⇨ The software switches to the next menu point or back to the menu and saves the entry.

### Quitting a menu option without confirming it

Press ) *[Back]*.

⇨ The software switches to the next menu point or back to the menu without saving anything.

### Returning to a continuous display

Press ) *[Menu]*.

⇨ The software cancels the entry and switches to a continuous display without saving anything.

### Changing adjustable variables

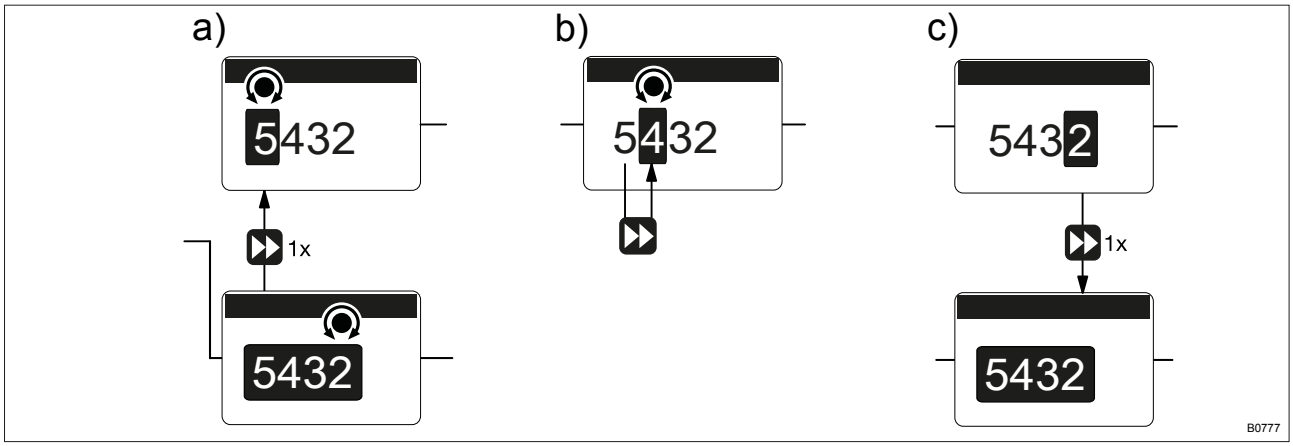


*Fig. 31: a) Changing from one figure to its initial figures; b) Changing the figure; c) Returning from the last figure to the (complete) figure (to correct a wrong figure, for example0.*

### Changing a (complete) number

Turn the *[Clickwheel]*.

⇨ The value of the figure highlighted is increased or lowered.

### Changing figures

1. To adjust the value of a figure, press ) *[Priming]*.

   ⇨ The first figure is highlighted - see Figure above, point a)

2. To adjust the value of a figure, turn the *[Clickwheel]*.
3. To move to the next figure, press )*[Priming]* - see Fig. above, point b).

4. To run through the figures again, if necessary ( possibly because of an incorrect figure), when you get to the last figure press ⏭ ) *[Priming]* again - see Fig. above, point c).

   ⇨ Now you can start from the beginning again.

Confirming adjustable variables

Press the *[Clickwheel]* 1x.

⇨ The software saves the entry.

## 10.2 Checking adjustable variables

Continuous displays

Before you adjust the pump, you can check the actual settings of the adjustable variables:

Simply turn the *[Clickwheel]* if the pump is showing a continuous display.

⇨ Each time the *[Clickwheel]* engages when you turn it, you will see a different continuous display.

*The number of continuous displays depends on the identity code, the selected operating mode and the connected additional devices, see overview "Continuous displays" in the appendix.*

Secondary displays

The lowest line of a continuous display shows different information (which cannot be adjusted in the secondary display) - see overview "Continuous displays and secondary displays" in the appendix.

You can access secondary displays via any continuous display as follows:

1. Press the *[Clickwheel]* for 3 seconds.

   ⇨ A frame appears around the secondary display.

2. Providing there is a frame, you will see a different secondary display each time the *[Clickwheel]* engages when turned.

   When you reach the secondary display you wish, leave the *[Clickwheel]* and wait briefly.

## 10.3 Changing to set up mode

In a continuous display, if you press ☰ ) *„Menu“*, the pump changes to set-up mode - in the *„Menu“*. For more information refer to the following chapter entitled "Set-up / menu".

If under *„Access protect.“* only the *„Menu“* or *„All“* has been set (top left lock symbol), then after pressing the *[Clickwheel]*, first enter the *„Password“*.

# 11 Set Up / *„Menu“*

- *Please also refer to all overviews covering "Operating/set up overview" and "Operating menu for gamma/ X, complete" in the appendix and in the chapters "Overview of Equipment and Control Elements".*
- *The pump leaves the menu and returns to a continuous display if ) [Menu] is pressed or no key is pressed for 60 seconds.*

The *„Menu“* is sub-divided as follows:

1 - *„Information“*

2 - *„settings“*

3 - *„Timer“*

4 - *„Service“*

5 - *„Language“*

## 11.1 *„Information“*

➔ *„Menu / Information ➔ ...“*

The *„Information“* provides information on your pump and certain parameters and counters. The number and type can depend on the pump settings.

## 11.2 *„settings“*

➔ *„Menu / Information ➔ Settings ➔ ...“*

The *„Settings“* menu generally includes these setting menus:

1 - *„Operating mode“*

2 - *„Automatic“*

3 - *„Stroke length“*

4 - *„Metering“*

5 - *„Concentration“*

6 - *„Calibration“*

7 - *„System“*

8 - *„Inputs/outputs“*

9 - *„Bleed valve“*

10 - *„Priming time“*

11 - *„Set time“*

12 - *„Date“*

### 11.2.1 *„Operating Mode“*

➔ *„Menu / Information ➔ Settings ➔ Operating mode ➔ ...“*

### 11.2.1.1 *„Manual“*

*„Menu / Information* ➔ *Settings* ➔ *Operating mode* ➔ *Manual“*

*„Manual“* operating mode permits you to operate the pump manually.

The capacity and/or stroke rate and stroke length can be set in the continuous displays in this operating mode.

### 11.2.1.2 *„Contact“*

*„Menu / Information* ➔ *Settings* ➔ *Operating mode* ➔ *Contact* ➔ *...“*

*„Contact“* operating mode allows you to trigger individual strokes or a stroke series.

You can trigger the strokes via a pulse sent via the "External control" terminal.

The purpose of this operating mode is to convert the incoming pulses into strokes with a step-down (fractions) or small step-up.

**CAUTION!**
The pump maintains the stroke rate when changing over from *„Manual“* operating mode to *„Contact“* operating mode.

*The maximum stroke rate can be set in „Contact“ operating mode. It should normally be set to 12,000 strokes/hour.*

**Memory - Pulses not yet processed**

You can also activate the *„Memory“* function extension ("memory" identifier ). When *„Memory“* is activated, the pump adds up the remaining strokes, which could not be processed, up to the maximum capacity of the stroke memory of 4,200,000,000 strokes. If this maximum capacity is exceeded, the pump goes into fault mode.

**CAUTION!**
– Only with *„Memory“* - *„off“* : If you press )*[STOP/START]* or empty the contact memory (*„Menu / Information* ➔ *Service* ➔ *Clear counters“*) or the "Pause" function is activated, the *„Memory“* is cleared.

**Factor**

The number of strokes per pulse depends on the factor which you can input. By using a factor you can multiply incoming pulses by a factor between 1.01 and 99.99 or reduce them by a factor of 0.01 to 0.99:

```
Number of strokes executed = factor x number of
incoming pulses
```

Table of examples

| | Factor | Pulse (sequence) | Number of strokes (sequence) |
|---|---|---|---|
| Step-up* | | | |
| | 1 | 1 | 1 |
| | 2 | 1 | 2 |
| | 25 | 1 | 25 |
| | 99.99 | 1 | 99.99 |
| | 1.50 | 1 | 1.50 (1 / 2) |
| | 1.25 | 1 | 1.25 (1 / 1 / 1 / 2) |
| Step-down** | | | |
| | 1 | 1 | 1 |
| | 0.50 | 2 | 1 |
| | 0.10 | 10 | 1 |
| | 0.01 | 100 | 1 |
| | 0.25 | 4 | 1 |
| | 0.40 | 2.5 (3 / 2) | (1 / 1) |
| | 0.75 | 1.33 (2 / 1 / 1) | (1 / 1 / 1) |

* Explanation of the conversion ratio

| | |
|---|---|
| With a factor of 1 | ... 1 stroke is executed per 1 pulse. |
| With a factor of 2 | ... 2 strokes are executed per 1 pulse |
| With a factor of 25 | ... 25 strokes are executed per 1 pulse |

** Explanation of step-down

| | |
|---|---|
| With a factor of 1 | ... 1 stroke is executed per 1 pulse. |
| With a factor of 0.5 | ...1 stroke is executed after 2 pulses. |
| With a factor of 0.1 | ...1 stroke is executed after 10 pulses. |
| With a factor of 0.75 | ...1 stroke is executed once after 2 pulses,<br>then 1 stroke is executed twice after 1 pulse,<br>and then again 1 stroke after 2 pulses etc. |

*If a remainder is obtained when dividing by the factor, then the unit adds the remainders together. As soon as this sum reaches or exceeds "1", the pump executes an additional stroke. Therefore on average during the metering operation, the resultant number of strokes precisely matches the factor.*

**Contact water meter**

Using "Pulse Control" you can ideally adapt the pump to the relevant process, for example in conjunction with contact water meters.

### 11.2.1.3 *„Batch“*

*„Menu / Information ➔ Settings ➔ Operating mode ➔ Batch ➔ ...“*

The *„Batch“* operating mode enables you to pre-select large metering volumes.

You can only select whole numbers but no fractions as the number of strokes (figures 1 to 99,999).

You can trigger the strokes using the *[Clickwheel]* if you have already switched to the *„Push“* continuous display. You can also trigger them via a pulse via the "External control" terminal.

*The stroke rate can be set in „Batch“ operating mode. It should normally be set to 12,000 strokes/hour.*

**Memory - remaining strokes not yet processed**

You can also activate the *„Memory“* function extension ("memory" identifier ). When *„Memory“* is activated, the pump adds up the remaining strokes, which could not be processed, up to the maximum capacity of the stroke memory of 4,200,000,000 strokes. If this maximum capacity is exceeded, the pump goes into fault mode.

CAUTION!

– The pump maintains its stroke rate when changing over from *„Manual“* operating mode to *„Batch“* operating mode.
– If you press )*[STOP/START]* or the "Pause" function is activated, the *„Memory“* is cleared.

*In operation, the batch size can be changed more easily by using the "Batch size" continuous display.*

### 11.2.1.4 *„Analogue“* (Option)

*„Menu / Information ➔ Settings ➔ Operating mode ➔ Analogue ➔ ...“*

The secondary display "Signal current" indicates the incoming current.

You can select 5 types of current signal processing:

- *„0 - 20 mA“*
- *„4 - 20 mA“*
- *„Linear curve “*
- *„Lower side band“*
- *„Upper side band“*

***„0 - 20 mA“***

At 0 mA the pump is stationary –

At 20 mA the pump works at maximum stroke rate.

*„4 - 20 mA“*

At 4 mA the pump is stationary –

At 20 mA the pump works at maximum stroke rate.

With current signals of less than 3.8 mA, an error message appears and the pump stops (e.g. if a cable has broken).

*„Linear curve“*

The symbol "Linear curve" appears on the LCD screen. You can enter any pump stroke rate behaviour proportional to the current signal. For this purpose, enter any two points P1 (I1, F1) and P2 (I2, F2) (F1 is the stroke rate at which the pump is to operate at current I1, F2 is the stroke rate at which the pump is to operate at current I2...); this defines a straight line and thus the behaviour is specified:

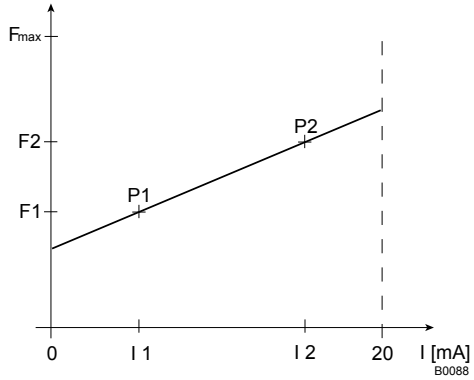


*Fig. 32: Frequency-current diagram for "Linear curve"*

*Plot a diagram similar to the one above – with values for (I1, F1) and (I2, F2) – so that you can set the pump as desired!*

*The smallest processable difference between I1 and I2 is 4 mA (ll I1-I2 ll ≥4 mA).*

**Error processing**

In the *„Error message“* menu item, you can activate an error process for these types of processing.

*„Lower side band“*

Using this type of processing, you can control a metering pump using the current signal as shown in the diagram below.

However, you can also control two metering pumps for different feed chemicals via a current signal (e.g. one acid pump and one alkali pump using the signal of a pH sensor). To do this, connect the pumps electrically in series.

**Error processing**

In the *„Error message“* menu item, you can activate an error process for these types of processing.

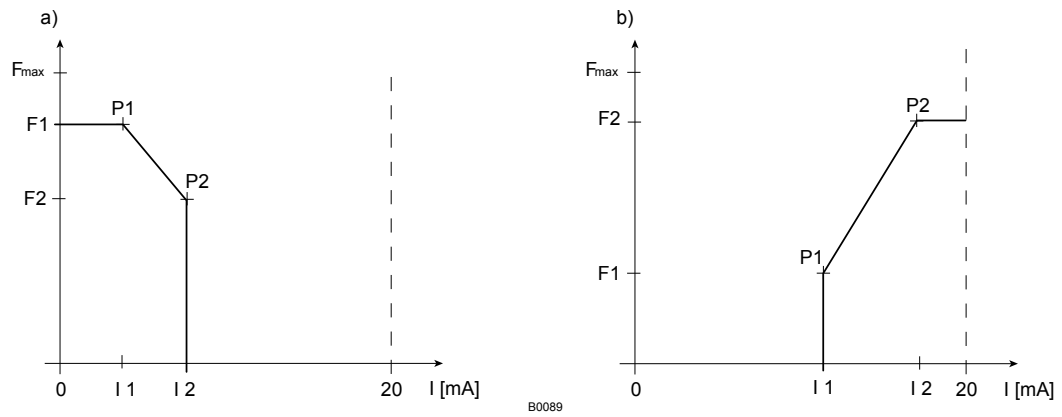


*Fig. 33: Frequency-current diagram for a) Lower side band, b) Upper side band*

***„Upper side band“***

Using this processing type, you can control a metering pump using the current signal as shown in the diagram above.

Everything functions according to the type of the processing *„Lower side band“*.

## 11.2.2 *„Automatic“*

➔ *„Menu / Information* ➔ *Settings* ➔ *Automatic* ➔ *...“*

In the *„Automatic“* menu, you can set whether the unit is to meter automatically or conventionally.

With *„Automatic“* - *„on“*, you set direct values, such as capacity, metering volume or dosing time, instead of stroke length and stroke rate. Other selection points then appear in the operating menu - refer to the chapter "Operating Menu for gamma/ X, complete" (in the appendix) for the selection points highlighted with a "*1".

In *„Automatic“* - *„on“* metering mode, the gamma/ X specifies the stroke length and the stroke rate according to the conditions determined in order to meter the set capacity.

*„Automatic“ - „on“ and „Automatic“ - „off“ metering modes are completely independent of each other. That is to say that „Automatic“ - „off“ metering mode does not carry over settings from „Automatic“ - „on“.*

**Setting ranges**

| | *„Automatic“ - „on“* | *„Automatic“ - „off“* |
|---|---|---|
| Manual, continuous | 1:2,000 | 1:2,000 |
| Manual, discontinuous | 1:40,000 | 1:40,000 |

## 11.2.3 *„Stroke length“*

➔ *„Menu / Information* ➔ *Settings* ➔ *Stroke length* ➔ *...“*

The menu does not appear with *„Automatic“ „on“*!

In the *„Stroke length“* menu, you can enter the stroke length manually.

> *In operation, the stroke length can be changed more easily by using the "Stroke length" continuous display:*
> – *Turn the [Clickwheel] to return to the "Stroke length" continuous display.*
> – *Press the [Clickwheel] and then turn it to set the stroke length.*
> – *Press the [Clickwheel] to save the stroke length.*

## 11.2.4 Metering

☰ ➔ *„Menu / Information* ➔ *Settings* ➔ *Metering* ➔ *...“*

### 11.2.4.1 *„Discharge Stroke“*

☰ ➔ *„Menu / Information* ➔ *Settings* ➔ *Metering* ➔ *Discharge stroke* ➔ *...“*

In the *„Settings“* - *„Discharge stroke“* sub-menu, you can precisely match the pump metering flow over time against the requirements of the particular application.

This ensures that the user can set the optimum **discharge stroke** for his application, as required:

| Pos.* | Discharge stroke | Application |
|---|---|---|
| A. | *„optimum“* | For maximum accuracy when metering and the very best results with internal pressure measurement and special functions. |
| B. | *„fast“* | For as fast a discharge stroke as possible - the duration of the discharge stroke is dependent on the stroke rate. |
| C. | *„Sine mode“* | For a long, sine-shaped discharge stroke - the duration of the discharge stroke is dependent on the stroke rate. |
| D. | *„continuous“* | For a continuous discharge stroke e.g. for bottling processes. The duration of the discharge stroke is dependent on the stroke rate. |
| E. | *„DFMa“* | For optimum operation with a flow meter DulcoFlow® DFMa. |

* see following drawing.

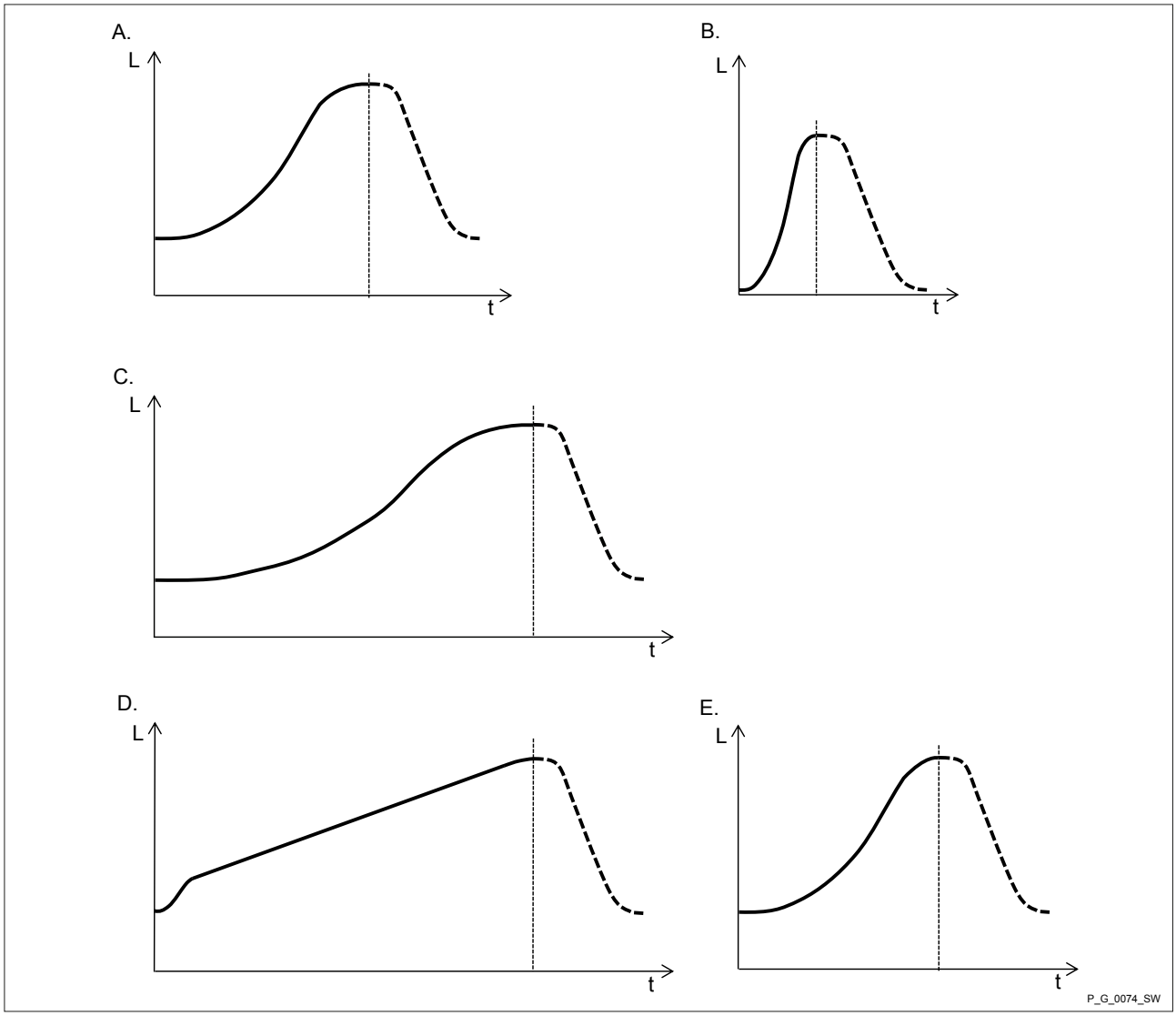


*Fig. 34: Discharge stroke metering profiles with stroke L and time t (suction stroke shown as a dotted line)*

### 11.2.4.2 *„Suction Stroke“*

*➔ „Menu / Information ➔ Settings ➔ Metering ➔ Suction stroke ➔ ...“*

It is possible to selectively also slow the **suction stroke** with all these metering profiles for the discharge stroke - see . In this way, it is possible to prevent the main cause of inaccurate metering with high viscosity feed chemicals, namely the incomplete filling of the liquid end. With gaseous feed chemicals, the slow suction stroke prevents cavitation and consequently increases dosing precision.

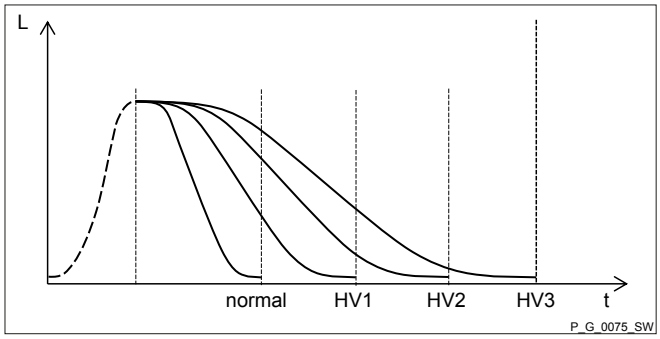


*Fig. 35: Suction stroke metering profiles with stroke L and time t*

| | |
|---|---|
| Normal | Normal suction stroke |
| HV1 | Suction stroke for viscous feed chemical |
| HV2 | Suction stroke for average viscosity feed chemical |
| HV3 | Suction stroke for high-viscosity feed chemical |

– *Slowing down the suction stroke leads to a lower stroke rate and thus to a lower capacity.*

| *„Suction stroke“* setting | Maximum stroke rate<br>Strokes/min |
|---|---|
| Normal | 200 |
| HV1 | 160 |
| HV2 | 120 |
| HV3 | 80 |

### 11.2.4.3 *„Pressure Stage“*

➔ *„Menu / Information* ➔ *Settings* ➔ *Metering* ➔ *Pressure stage* ➔ *...“*

You can use the programmable function *„Pressure stage“* to reduce the nominal pressure of the pump, thereby minimising the risk of lines rupturing.

The switch-off pressure of the permanently active overpressure monitoring falls at the same time as the pressure stage - see .

Nominal pressures depending on the size of the liquid ends and the pressure stages

| Pressure stage / | 4 | 7 | 10 | 16 | 20 | 25 |
|---|---|---|---|---|---|---|
| Size of liquid end | | | | | | |
| 1602 | X | X | X | X | - | - |
| 2002 | X | X | X | - | X | - |
| 1604 | X | X | X | X | - | - |
| 2504 | X | X | X | - | - | X |

| Pressure stage / | 4 | 7 | 10 | 16 | 20 | 25 |
|---|---|---|---|---|---|---|
| Size of liquid end | | | | | | |
| 1009 | X | X | X | - | - | - |
| 0708 | X | X | - | - | - | - |
| 0715 | X | X | - | - | - | - |
| 0414 | X | - | - | - | - | - |
| 0424 | X | - | - | - | - | - |

| Pressure stage | Switch-off pressure* |
|---|---|
| 2 | 2.8 |
| 4 | 5.2 |
| 7 | 8.5 |
| 10 | 12.5 |
| 16 | 19 |
| 20 | 23 |
| 25 | 28 |

* above which the unit is switched off for the medium-term in the event of excess pressure

### 11.2.4.4 *„Monitoring“*

➔ *„Menu / Information* ➔ *Settings* ➔ *Metering* ➔ *Monitoring* ➔ *...“*

#### 11.2.4.4.1 *„Air lock“*

➔ *„Menu / Information* ➔ *Settings* ➔ *Metering* ➔ *Monitoring* ➔ *Air lock* ➔ *...“*

Should a message and the "Air lock" symbol appear, this may mean that there is gas in the liquid end (if *„Warning“* or *„Error“* was set in the *„Air lock“* sub-menu).

### 11.2.4.5 Compensation

Using the *„Compensation“* programmable function, you can minimise the influence of back pressure oscillations and thus achieve a high dosing precision.

*With difficult hydraulic conditions, it can be better to switch off the „Compensation“ function.*

## 11.2.5 Concentration

*„Menu / Information ➔ Settings ➔ Concentration ➔ ...“*

The desired mass concentration of feed chemical that will subsequently be required in the dissolving medium (e.g. the main flow) can be entered directly in the "Concentration" continuous display.

**The principle of entering the concentration:**

1. Select the operating mode.
2. Set the data for the feed chemical and dissolving medium in the *„Set up“*-*„Concentration“* menu.
3. Set the desired concentration in the "Concentration" continuous display.

- *The "Concentration" continuous display only appears, if:*
  - *the pump is calibrated.*
  - *the „Concentration“ menu was run through in the operating mode used.*
  - *and „Concentration control“ was switched to „active“ - in the operating mode being used.*
- *The "Concentration" continuous display switches to the display mode "%" at concentrations above 999.99 ppm.*
- *When changing between operating modes, the pump saves the settings for each operating mode - providing it is connected to supply voltage.*
- *If the pump is to display the concentration as a volume concentration, enter "1.00" kg/l for the density of the feed chemical.*

### 11.2.5.1 *„Manual“* operating mode (settings for the *„Concentration“* function)

*„Menu / Information ➔ Settings ➔ Concentration ➔ Concentration control ➔ Flow of main medium ➔ ...“*

The "Concentration input" in *„Manual“* operating mode is intended for metering a substance into pipework containing a medium flowing at a constant rate (*„main flow“*) in such a way that it has a specific mass concentration in the flow.

**CAUTION!**

**Danger of too high concentrations**

The metering pump can continue to meter if the flow falls or stops entirely.

- Take system-based precautions to prevent the metering pump from continuing to meter in these circumstances.

**The prerequisites are that:**

- the flowing medium has the same density as water (1 kg/l ≙ g/cm$^3$)
- the mass concentration of the feed chemical is known - see the feed chemical safety data sheet (e.g. with 35% sulphuric acid: 35 %)

- the density of the feed chemical is known - see the feed chemical safety data sheet (e.g. with 35% sulphuric acid: 1.26 kg/l ≙ g/cm$^3$)
- The measurement unit for the liquid volume is set in the *„System* ➔ *Volume unit“* menu.

Procedure

**CAUTION!**
The precision of the concentration is strongly dependent on:
– the precision of the metering pump calibration.
– the precision of the inputs.

1. Calibrate the metering pump if it is not yet calibrated - see chapter *„Settings“*-*„Calibration“* chapter.
2. Check whether the metering pump is set to *„Automatic“* - *„on“* metering mode.
3. Select *„Manual“* - *„Operating mode“* (possible settings from other operating modes remain saved.).
4. Select *„Concentration“* in the *„Set up“* menu.
5. Actively set *„active“* in the *„Concentration control“* menu item and press the *[Clickwheel]*.
6. Set the *„Main medium flow“* (in the pipework) and then press the *[Clickwheel]*.
7. Set the *„Feed chemical mass concentration“* and press the *[Clickwheel]*.
8. Set the (mass) *„Feed chemical density“* and press the *[Clickwheel]*.
   ⇨ The *„Concentration“* menu appears.
9. Press *[Menu]*.
   ⇨ A continuous display appears.
10. Press the *[Clickwheel]* to go to the "Concentration" continuous display (ppm or %).
11. Enter the required mass concentration of the feed chemical in the main flow by pressing and turning the *[Clickwheel]*.

Possible values of adjustable variables

| Adjustable variable | Lower value | Upper value | Increment |
|---|---|---|---|
| Flow in m$^3$/h | 0000.1 | 9999.9 | 0000.1 |
| Mass concentration in % | 000.01 | 100.00 | 000.01 |
| Mass density in kg/l | 0.50 | 2.00 | 0.01 |

### 11.2.5.2 *„Contact“* operating mode (settings on the *„Concentration“* function)

*➔ „Menu / Information ➔ Settings ➔ Concentration ➔ Concentration control ➔ Contact gap ➔ ...“*

The "Concentration input" in *„CONTACT“* operating mode is intended for metering a substance into pipework containing a medium flowing at a variable rate in such a way that it has a specific mass concentration in the flow.

CAUTION!

Danger of too high concentrations

The metering pump can continue to meter if the flow falls or stops entirely.

– Take system-based precautions to prevent the metering pump from continuing to meter in these circumstances.

**The prerequisites are that:**

- the flowing medium has the same density as water (1 kg/l ≙ g/cm$^3$)
- the mass concentration of the feed chemical is known - see the feed chemical safety data sheet (e.g. with 35% sulphuric acid: 35 %)
- the density of the feed chemical is known - see the feed chemical safety data sheet (e.g. with 35% sulphuric acid: 1.26 kg/l ≙ g/cm$^3$)
- a contact water meter is hydraulically installed and connected to the external input of the metering pump.
- The measurement unit for the liquid volume is set in the *„System ➔ Volume unit“* menu.

**Procedure**

CAUTION!

The precision of the concentration is strongly dependent on:

– the precision of the metering pump calibration.
– the precision of the inputs.

1. Calibrate the metering pump if it is not yet calibrated - see chapter *„Settings“*-*„Calibration“* chapter.
2. Check whether the metering pump is set to *„Automatic“* - *„on“* metering mode.
3. Select *„Contact“* - *„Operating mode“* and simply confirm the associated menu items with the *[Clickwheel]* (possible settings from other operating modes remain saved.)
4. Select *„Concentration“* in the *„Set up“* menu.
5. Actively set *„active“* in the *„Concentration control“* menu item and press the *[Clickwheel]*.
6. Set the *„Contact gap“* and press the *[Clickwheel]*.
7. Set the (mass) *„Feed chemical concentration“* and press the *[Clickwheel]*.
8. Set the (mass) *„Feed chemical density“* and press the *[Clickwheel]*.

   ⇨ The *„Concentration“* menu appears.
9. Press *[Menu]*.

   ⇨ A continuous display appears.
10. Press the *[Clickwheel]* to go to the "Concentration" continuous display (ppm or %).
11. You can enter the desired mass concentration using the *[Clickwheel]*.

Possible values of adjustable variables

| Adjustable variable | Lower value | Upper value | Increment |
|---|---|---|---|
| Contact gap in l/contact | 000.10 | 999.99 | 000.01 |
| Mass concentration in % | 000.01 | 100.00 | 000.01 |
| Mass density in kg/l | 0.50 | 2.00 | 0.01 |

### 11.2.5.3 *„Batch“* operating mode (settings for the *„Concentration“* function)

☰ ➔ *„Menu / Information* ➔ *Settings* ➔ *Concentration* ➔ *Concentration control* ➔ *Volume of main medium* ➔ *...“*

The "Concentration input" in *„Batch“* operating mode, is intended for metering a substance into the medium in a storage tank so that it then has a defined mass concentration in the storage tank (when batching a solution – do not forget to stir!).

The prerequisites are that:

- the medium in the storage tank has the same mass density as water (1 kg/l ≙ g/cm$^3$)
- the mass concentration of the feed chemical is known - see the feed chemical safety data sheet (e.g. with 35% sulphuric acid: 35 %)
- the density of the feed chemical is known - see the feed chemical safety data sheet (e.g. with 35% sulphuric acid: 1.26 kg/l ≙ g/cm$^3$)
- The measurement unit for the liquid volume is set in the *„System* ➔ *Volume unit“* menu.

Procedure

**CAUTION!**
The precision of the concentration is strongly dependent on:
– the precision of the metering pump calibration.
– the precision of the inputs.

1. Calibrate the metering pump if it is not yet calibrated - see *„Set up“*-*„Calibration“* chapter.
2. Check whether the metering pump is set to *„Automatic“* - *„on“* metering mode.
3. Select *„Batch“* - *„Operating mode“* and simply confirm the associated menu items with the *[Clickwheel]* (possible settings from other operating modes remain saved.)
4. Select *„Concentration“* in the *„Set up“* menu.
5. Actively set *„active“* in the *„Concentration control“* menu item and press the *[Clickwheel]*.
6. Set the *„Main medium volume“* of the medium in the storage tank and press the *[Clickwheel]*.
7. Set the (mass) *„Feed chemical concentration“* and press the *[Clickwheel]*.
8. Set the (mass) *„Feed chemical density“* and press the *[Clickwheel]*.
   ⇨ The *„Concentration“* menu appears.
9. Press *[Menu]* ☰.
   ⇨ A continuous display appears.
10. Press the *[Clickwheel]* to go to the "Concentration" continuous display (ppm or %).

11. You can enter the desired mass concentration using the *[Clickwheel]*.

**Possible values of adjustable variables**

| Adjustable variable | Lower value | Upper value | Increment |
|---|---|---|---|
| Volume in l | 0000.1 | 9999.9 | 0000.1 |
| Mass concentration in % | 000.01 | 100.00 | 000.01 |
| Mass density in kg/l | 0.50 | 2.00 | 0.01 |

### 11.2.5.4 *„Analogue“* operating mode (settings on the *„Concentration“* function)

*„Menu / Information ➔ Settings ➔ Concentration ➔ Concentration control ➔ Max. flow of main medium ➔ ...“*

The "Concentration input" in *„Analogue“* operating mode is intended for metering a substance into pipework containing a medium flowing at a variable rate in such a way that it has a specific mass concentration in the flow.

**CAUTION!**

**Danger of too high concentrations**

The metering pump can continue to meter if the flow falls or stops entirely.

– Take system-based precautions to prevent the metering pump from continuing to meter in these circumstances.

**CAUTION!**

**Risk of incorrect concentrations**

– After adjusting, check whether the concentration at various flows corresponds to the required result.

**The prerequisites are that:**

- the flowing medium has the same density as water (1 kg/l ≙ g/cm$^3$)
- the mass concentration of the feed chemical is known - see the feed chemical safety data sheet (e.g. with 35% sulphuric acid: 35 %)
- the density of the feed chemical is known - see the feed chemical safety data sheet (e.g. with 35% sulphuric acid: 1.26 kg/l ≙ g/cm$^3$)
- a flow meter with analogue output is hydraulically installed and connected to the external input of the metering pump.
- The measurement unit for the liquid volume is set in the *„System ➔ Volume unit“* menu.

**Procedure**

**CAUTION!**

The precision of the concentration is strongly dependent on:

– the precision of the metering pump calibration.
– the precision of the inputs.

1. Calibrate the metering pump if it is not yet calibrated - see chapter *„Settings“*- *„Calibration“* chapter.
2. Check whether the metering pump is set to *„Automatic“* - *„on“* metering mode.
3. Select *„Analogue“* operating mode and confirm with the *[Clickwheel]*.
4. Set *„0...20 mA“* or *„4..20 mA“* in the *„Select analogue“* menu item and press the *[Clickwheel]*.
5. Select *„Concentration“* in the *„Set up“* menu.
6. Actively set *„active“* in the *„Concentration control“* menu item and press the *[Clickwheel]*.
7. Set the *„Max. main medium flow“* (in the pipework) and press the *[Clickwheel]*. (It is then assigned to the current value of 20 mA).
8. Set the (mass) *„Feed chemical concentration“* and press the *[Clickwheel]*.
9. Set the (mass) *„Feed chemical density“* and press the *[Clickwheel]*.

   ⇨ The *„Concentration“* menu appears.
10. Press *[Menu]*.

    ⇨ A continuous display appears.
11. Press the *[Clickwheel]* to go to the "Concentration" continuous display (ppm or %).
12. You can enter the desired mass concentration using the *[Clickwheel]*.

CAUTION!

- Note the decimal point.
- The mass concentration is affected by changes in the stroke rate and the stroke length.
- The pump limits the upper value of the mass concentration, because otherwise the incremental jumps when adjusting would be unacceptably large. Adjust the stroke length as necessary - do not set it under 30%.

*The least significant figures of the value in the continuous display cannot be changed at will using the [Arrow keys], rather only in incremental jumps resulting from the input data.*

*As necessary, change the stroke length and adjust the concentration; in doing so the pump compensates via the stroke rate.*

**Possible values of adjustable variables**

| Adjustable variable | Lower value | Upper value | Increment |
|---|---|---|---|
| Max. flow in $m^3/h$ | 0000.1 | 9999.9 | 0000.1 |
| Mass concentration in % | 000.01 | 100.00 | 000.01 |
| Mass density in kg/l | 0.50 | 2.00 | 0.01 |

## 11.2.6 Calibration

➔ *„Menu / Information* ➔ *Settings* ➔ *Calibration* ➔ *...“*

***Accuracy of the calibration***

*Normally the pump does not have to be calibrated.*

*The pump can be calibrated if viscous feed chemicals are used or extremely high accuracy is required.*

*In „Auto“ dosing mode - „off“: Some menus only appear if the pump has been calibrated.*

**WARNING!**

If the feed chemical is dangerous, take appropriate safety precautions when performing the following calibration instructions. Observe the safety data sheet for the feed chemical!

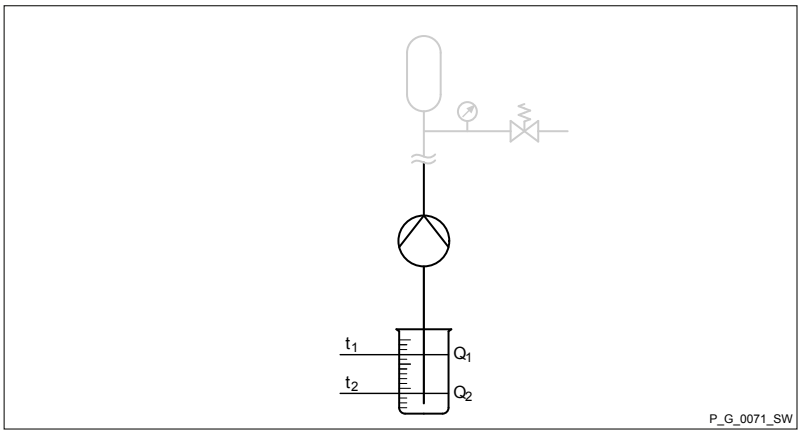


**Preparation**

1. Use the *[Clickwheel]* to scroll through the continuous display to check whether litres or gallons have been selected.
2. If the incorrect volume unit has been selected, correct it in the *„Menu / Information* ➔ *Settings* ➔ *System* ➔ *Volume unit“* menu.
3. Check whether the capacity of stroke rate in the continuous display is not too low for calibration.
4. Lead the suction hose into a measuring cylinder containing the feed chemical – make sure that the discharge hose is installed in a permanent manner (operating pressure, ...!).
5. Prime the feed chemical (press ⏩ ) *[Priming]*) if the suction hose is empty.

**Calibration process**

1. Record the level in the measuring cylinder.
2. Select the *„Menu / Information* ➔ *Settings* ➔ *Calibrate“„“* menu and press the *[Clickwheel]*.
   ⇨ The *„Start calibration“* (PUSH) menu point appears.
3. To start calibration, press the *[Clickwheel]*.
   ⇨ The *„Calibrate ...“* menu item appears, the pump starts to pump and indicates the number of strokes.

4. After a reasonable number of strokes (a minimum of 200), use the *[Clickwheel]* to stop the pump.
   ⇨ The *„Calibration ended“* menu point appears. It demands the calibration volume to be entered.
5. Determine the required metering volume (difference between initial volume - remaining volume in the measuring cylinder).
6. Use the *[Clickwheel]* to enter this volume in the *„Calibration ended“* menu items and close.
   ⇨ The pumps switches to the *„Calibration result“* menu item - the pump is calibrated.
7. Press the *[Clickwheel]*.
   ⇨ The pump returns to the *„Menu / Information ➔ Settings“* menu.

## 11.2.7 System

☰ ➔ *„Menu / Information ➔ Settings ➔ System ➔ ...“*

The *„System“* menu splits into the following sub-menus:

1 - *„Bluetooth“*

2 - *„Dosing head“*

3 - *„Volume unit“*

4 - *„Pressure unit“*

5 - *„Pressure adjustment“*

### 11.2.7.1 *„Bluetooth “*

☰ ➔ *„Menu / Information ➔ Settings ➔ System ➔ Bluetooth ➔ ...“*

You can switch the pump's Bluetooth communication on and off in the *„Bluetooth“* sub-menu.

### 11.2.7.2 *„Dosing head “*

☰ ➔ *„Menu / Information ➔ Settings ➔ System ➔ Dosing head ➔ ...“*

CAUTION!

– Should a different liquid end size be fitted, then the pump must be reprogrammed in the *„Dosing head“* sub-menu.
– Reprogram the pump to *„No dosing head“* for demonstration purposes or if operating without feed chemical.

*If „SEK“ has been selected as the type of head, the pressure is not displayed and the „Automatic“ menu is hidden. Only „fast“ can be selected for the „Discharge stroke“ and „normal“ for the „Suction stroke“.*

#### 11.2.7.3 Volume unit

☰ ➔ *„Menu / Information* ➔ *Settings* ➔ *System* ➔ *Volume unit* ➔ *...“*

You can select another unit for the volume in the *„Volume unit“* sub-menu.

#### 11.2.7.4 Pressure unit

☰ ➔ *„Menu / Information* ➔ *Settings* ➔ *System* ➔ *Pressure unit* ➔ *...“*

In the *„Pressure unit“* sub-menu, you can select another unit for the pressure.

#### 11.2.7.5 Pressure adjustment

☰ ➔ *„Menu / Information* ➔ *Settings* ➔ *System* ➔ *Pressure adjustment* ➔ *...“*

You can adjust the pressure value, which the pump displays in the *„Pressure adjustment“* sub-menu, if it is to deviate from the pressure in the discharge line.

*There is no „Pressure adjustment“ sub-menu with pumps with SER or SEK dosing heads.*

Requirements:

- A manometer is installed in the discharge line.
- Everything is set on the pump.

1. Start the pump and allow it to work until the value in the pressure display is stable.
2. Stop the pump.
3. Shift to the *„Pressure adjustment“* sub-menu.
   ⇨ The *„Start pump“* menu appears.
4. Use the *[Clickwheel]* to confirm *„Yes“*.
   ⇨ The pump begins to pump.
5. Use the *[Clickwheel]* to input the pressure value from the manometer.
6. Use the *[Clickwheel]* to confirm this pressure value.
   ⇨ The pump stops.

   *„Pressure adjustment“* is now complete.

### 11.2.8 Inputs/outputs

☰ ➔ *„Menu / Information* ➔ *Settings* ➔ *Inputs/Outputs* ➔ *...“*

The *„Inputs/Output“* menu splits into the following sub-menus:

1 - *„Auxiliary capacity“* / *„Auxiliary frequency“*

2 - *„Relay1“* (optional)

3 - *„Relay2“* (optional)

4 - *„mA output“* (optional)

6 - *„Flow monitor“* (only if connected)

5 - *„Diaphragm rupture“* (only if connected)

7 - *„Pause input“* (Option)

8 - *„Level warning“*

9 - *„Level error“*

### 11.2.8.1 *„Auxiliary capacity“ / „Auxiliary frequency“*

*➔ „Menu / Information ➔ Settings ➔ Inputs/Outputs ➔ Auxiliary capacity / Auxiliary frequency ➔ ...“*

The programmable function *„Auxiliary capacity“* / *„Auxiliary frequency“* permits switch-over to an additional capacity / stroke rate that can be fixed in the *„Auxiliary capacity“* / *„Auxiliary frequency“* menu.

It can be activated via the "External control" terminal. If *„Auxiliary capacity“* / *„Auxiliary frequency“* is being used, then the identifier "AUX” appears on the LCD screen.

Refer to the "Hierarchy of Operating Modes, Functions and Fault Statuses" for the order of the various operating modes, functions and fault statuses.

### 11.2.8.2 *„Relay1 (Optional)“*

*➔ „Menu / Information ➔ Settings ➔ Inputs/outputs ➔ Relay1 ➔ ...“*

*The setting options for the „Relay“ function only exist if a relay is fitted.*

gamma/ X, GMXa

Relay, physical and pre-set to ...

| Identity code specification | Relay, physical | Pre-set to ... |
|---|---|---|
| 1 | 1 x changeover contact 230 V – 8 A | Fault indicating relay, N/C |
| 4 | 2 x N/O 24 V – 100 mA | Fault indicating relay, N/C, and pacing relay |
| C | 1 x N/O 24 V – 100 mA, + 4...20 mA output | Fault indicating relay, N/C |

Relay type

You can reprogram the relays to these types:

| Menu setting | Effect |
|---|---|
| Inactive | The relay is inactive. |
| Error | The relay switches in the event of a fault message (red LED*). |
| Warning | The relay switches in the event of a warning message (yellow LED*). |
| Warning + error | The relay switches in the event of a warning message (yellow LED*) or a fault message (red LED*). |
| Pump active | The relay switches as soon as the pump is in standby and not in a state like *„Pause“* . |
| Metering / Batch | The relay changes its state as soon as a batch has been processed. |
| Stroke rate** | The relay switches at every stroke. |
| Option | The relay has the option of the module plugged in (e.g. the bleed module). |
| Bleed | The relay switches upon the internal signal *„Air lock“*. |

* see the "Troubleshooting" chapter

** only use *„Relay 2“* for this relay type (semiconductor relay).

Relay polarity

You can set here how a relay is to switch.

| Menu setting | Effect |
|---|---|
| normally-closed (NC) | The relay is closed in normal mode and opens with a triggering event. |
| normally-open (NO) | The relay is open in normal mode and opens with a triggering event. |

### 11.2.8.3 *„Relay2 (Optional)“*

➔ *„Menu / Information* ➔ *Settings* ➔ *Inputs/outputs* ➔ *Relay2* ➔ *...“*

Relay cycle quantity

Here you can set the metering volume for which the pacing relay is to switch once.

For more information on *„Relay2“* - see *Chapter 11.2.8 „Inputs/outputs“ on page 65*.

### 11.2.8.4 *„mA Output (Optional)“*

➔ *„Menu / Information* ➔ *Settings* ➔ *Inputs/outputs* ➔ *mA output* ➔ *...“*

Here you can set which current range is to be used at the mA output.

You can then set whether the current stroke rate (strokes / hour) is to be signalled at the mA output or the capacity (litres / hour) and the corresponding value for 20 mA.

### 11.2.8.5 *„Flow control“*

➔ *„Menu / Information* ➔ *Settings* ➔ *Inputs/outputs* ➔ *Flow control* ➔ *...“*

*The setting options for the „Flow control“ function only exists if a flow control has been electrically installed. The symbol for flow control appears: .*

A dosing monitor, such as a Flow Control (also DulcoFlow®), can register the individual pressure impacts of the pump and report it to the pump.

The pump switches to fault mode if this feedback is missing in a sequence, as set under *„Error tolerance“*.

It is possible to switch the function on and off under *„Activation“* .

It is possible to set whether the function is to be deactivated with auxiliary frequency under *„if Auxiliary“*.

### 11.2.8.6 *„Diaphragm rupture“*

➔ *„Menu / Information* ➔ *Settings* ➔ *Inputs/outputs* ➔ *Diaphragm rupture* ➔ *...“*

*The setting options for the „Diaphragm rupture“ function only exist if a diaphragm rupture indicator is electrically installed. The symbol for diaphragm appears .*

In the *„Diaphragm rupture“* sub-menu you can select whether the pump generates a warning message or a fault message in the event of a diaphragm rupture.

### 11.2.8.7 *„Pause Input“*

➔ *„Settings* ➔ *Inputs/outputs* ➔ *Pause* ➔ *...“*

In the *„Pause“* menu you can select whether the pump switches to *„Pause“* with a "normally-open (NO)" or "normally-closed (NC) input contact signal.

### 11.2.8.8 *„Level warning“*

➔ *„Settings* ➔ *Inputs/outputs* ➔ *Level warning* ➔ *...“*

In the *„Level warning“* menu, you can select whether the pump switches to *„Level warning“* with a "normally-open (NO)" or "normally-closed (NC)" input contact signal.

### 11.2.8.9 *„Level error“*

➔ *„Settings* ➔ *Inputs/outputs* ➔ *Level error* ➔ *...“*

In the *„Level error“* menu, you can select whether the pump switches to *„Level error“* with a "normally-open (NO)" or "normally-closed (NC)" input contact signal.

## 11.2.9 Bleed valve

➔ *„Menu / Information* ➔ *Settings* ➔ *Bleeding* ➔ *...“*

The *„Bleed“* function is used for controlled bleeding of the liquid end.

The software solution is always in the pump control. The pump presses the gas bubbles out of the liquid end at a high stroke rate during bleeding.

If the pump has "Automatic bleed" via the "relay identity code option (retrofittable), the pump can be bled via a bleed relay.

There are 2 hardware options for automatically bleeding the discharge side:

- via ProMinent's bleed module in the liquid end.
- via a customer implemented bleed facility in the discharge line.

The *„Bleed“* function can be triggered in 4 ways:

1 - Not (*„Off“*).

2 - *„Periodically“* by an internal signal - defined by *„Cycle“* and *„Duration“*.

3 - By the *„Air lock“* internal signal

4 - If one of the two signals occurs (*„Both“*).

Detailed explanation:

1 - If *„Off“* has been selected in the menu, this function is deactivated.

2 - If *„Periodically“* was selected in the menu, then the control unit periodically triggers the bleed procedure with an adjustable *„cycle“* (10 ... 1440 min = 24 h) and an adjustable *„duration“* (5 ... 300 s = 5 min).

Bleeding is always triggered at the start of a period. A bleed process is also started by the **)** *[STOP/START]* key or by connecting the pump to mains voltage.

3 - If *„Air lock“* has been selected in the menu, the *„Air lock“* internal signal triggers the bleed procedure.

If the signal appears again within 8 minutes of the bleed procedure being carried out, the control unit repeats the bleed procedure up to a maximum of 3 times. However if the signal still appears, then an error message is generated, which has to be acknowledged via the *[dial]*.

In the event of an *„Air lock“* the option of a direct error or warning message disappears for the *„Air lock“* signal. The corresponding menu branch in the *„Settings“* menu is also hidden. The signal is only available for the *„Bleed“* function.

4 - If *„Both“* has been selected in the menu, then each trigger can trigger a bleed process.

**Sequence of the bleed procedure (automatic):**

1. The pump control stops the normal metering operation - the "Stop Pause" symbol appears on the LCD screen.
2. Only with bleed relay: After 1 s, the pump control opens the bleed valve on the liquid end (via the bleed relay and the solenoid valve).
3. 1 s later, the pump starts to run at a high stroke rate (like during priming) - the "Air lock" symbol appears on the LCD screen instead of the "Stop Pause" symbol.
4. The pump operates in this way for the total set time.
5. Once the set time has elapsed, the pump stops – the "Stop Pause" symbol appears on the LCD screen again.
6. Only with bleed relay: After 1 s the pump control closes the liquid end bleed valve.
7. After 1 s the "Stop Pause" symbol disappears and the pump recommences normal operation.

If the pump was in the "Stop" state at the time of triggering ( ) *[STOP/START]*, Pause, Error), the start of the bleed procedure is delayed - until this state has been cleared.

If the pump switched to "Stop" state during the bleed procedure, the pump control jumps immediately to phases 5 and 6 - see above. This definitely cancels the bleed procedure. As soon as the "Stop" state is cleared, the bleed procedure starts from the beginning.

### 11.2.10 *„Priming time“*

➔ *„Menu / Information* ➔ *Settings* ➔ *Priming time* ➔ *...“*

In the *„Priming time“* menu, you can select how long the metering pump is to prime once ) *[Priming]* has been pressed.

*In operation, the stroke length can be changed more easily using the "Priming time" display:*

- *Press ) [Priming] - the pump starts to prime.*
- *Turn the [Clickwheel] to set the priming time.*
- *Press the [Clickwheel] to save the priming time.*

### 11.2.11 *„Set time“*

➔ *„Menu / Information* ➔ *Settings* ➔ *Set time* ➔ *...“*

You can set the time in the *„Set time“* menu.

1. Use the dial to adjust a figure.
2. Use ) *[Priming]* to move to the next figure.

Under *„Auto. Summer time“* you can select whether you wish to change over to *„Summer time“*.

You can also input when the pump is to change to and from *„Summer time“*.

Check under *„Location“* whether the pump is also set to its own *„hemisphere“* of the world.

### 11.2.12 *„Date“*

➔ *„Menu / Information* ➔ *Settings* ➔ *Date* ➔ *...“*

You can set the date in the *„Date“* menu.

## 11.3 Timer

➔ *„Menu / Information* ➔ *Timer* ➔ *...“*

## 11.3.1 Timer Activation

*„Menu / Information ➔ Timer ➔ Activation ➔ ...“*

To activate the timer, set *„Activation“* to *„active“*.

## 11.3.2 Setting the Timer

*„Menu / Information ➔ Timer ➔ Setting the timer ➔ ...“*

*A program set up in "Automatic" - "on" metering mode will not function in "Automatic" - "off" metering mode and vice versa.*

You can create commands (program lines) for a timer program in the *„Set timer“* menu.

You can create up to 32 commands (program lines).

You can then use the administration functions to manage the commands - *Chapter 11.3.2 „Setting the Timer“ on page 71*.

Use the *„Clear all“* function to clear all commands (the program).

Create the command as follows:

1 - Create a command (program line)

2 - Select the triggering event and time

3 - Selecting the Action and Value

4 - Check the command

5 - Create the next command if necessary

### 11.3.2.1 Administration Functions for Commands

The following administration functions are available to manage the commands (program lines):

- *„New“*
- *„Display“* (only if commands entered)
- *„Change“* (only if commands entered)
- *„Clear“* (only if commands entered)

Use *„New“* to create a new command.

### 11.3.2.2 *„Init“* Initial Conditions

Use *„Init“* to specify initial conditions at the start of the program - see *Chapter 11.3.2.4 „Selecting the action and value“ on page 72*.

### 11.3.2.3 Selecting the *„Time Event“* and Time

❯

You can select a time event (cycle) and a time as well:

| Time event | Time |
|---|---|
| *„Hourly“* | hourly at the x minute |
| *„Daily (Mon-Sun)“* | daily at the time mm.ss, Monday to Sunday |
| *„Weekdays1 (Mo-Fr)“* | daily at the time mm.ss, Monday to Friday |
| *„Weekdays1 (Mo-Sa)“* | daily at the time mm.ss, Monday to Saturday |
| *„Weekend (Sa+Su)“* | daily at the time mm.ss, Saturday and Sunday |
| *„Weekly“* | weekly at the time mm.ss on the day dd. |
| *„Monthly“* | weekly at the time mm.ss on the x. day of the month |

CAUTION!
If you wish to use automatic summer time adjustment (*„Settings“* - *„Time“*) avoid any triggering events between 02:00 a.m. and 03:00 a.m.

### 11.3.2.4 Selecting the action and value

You can select an action and also a value:

| Action | Value |
|---|---|
| Manual | Litre/h *1 |
| | Strokes/h *2 |
| | Stroke length * 2 |
| Stop | -- |
| Frequency | Litre/h *1 |
| | Strokes/h *2 |
| Relay 1 | open |
| | closed |
| Relay 2 | open |
| | closed |

*1: only available in *„Automatic“* operating mode - see Chapter *„Settings“* - *„Automatic“*

*2: only available, if metering is done the traditional/conventional way.

### 11.3.2.5 Checking the Finished Command

The pump displays the finished command (program line) as soon as you have finished programming the command:

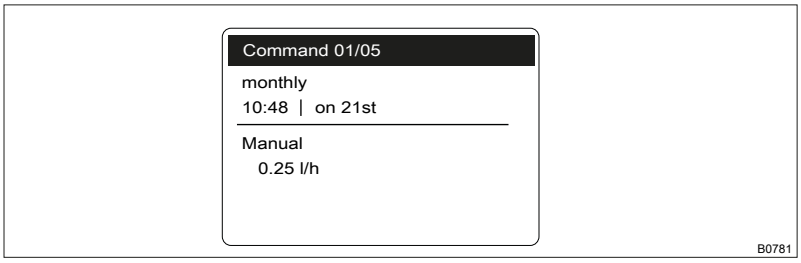


## 11.3.3 Clear All

➔ *„Menu / Information* ➔ *Timer* ➔ *Clear all* ➔ *...“*

Use the *„Clear all“* menu to clear all commands (the program).

## 11.3.4 Example

**Example of "Weekday metering"**

The pump is to meter 2 litres every half an hour every weekday (Mon-Fri) between 8:00 and 11:00:

| Com-mand | Time event | Time of day | Action | Capacity | Comment |
|---|---|---|---|---|---|
| 01 | workdays 1 (Mo-Fr) | 08:30 | Manual | 12,000 l/h | //Meter with 12,000 l/h// |
| 02 | workdays 1 (Mo-Fr) | 08:40 | Stop | | //Stop// |
| 03 | workdays 1 (Mo-Fr) | 09:30 | Manual | 12,000 l/h | //Meter with 12,000 l/h// |
| 04 | workdays 1 (Mo-Fr) | 09:40 | Stop | | //Stop// |
| 05 | workdays 1 (Mo-Fr) | 10:30 | Manual | 12,000 l/h | //Meter with 12,000 l/h// |
| 06 | workdays 1 (Mo-Fr) | 10:40 | Stop | | //Stop// |

Explanation: At a capacity of 12 l/h, the pump has to work for 10 minutes to meter 2 litres.

# 11.4 *„Service“*

➔ *„Menu / Information* ➔ *Service* ➔ *...“*

## 11.4.1 *„Access protect.“*

➔ *„Menu / Information* ➔ *Service* ➔ *Access protect* ➔ *...“*

You can lock parts of the setting options here.

The following locking options are available:

| Selection | Point ① | Point ② |
|---|---|---|
| *„none“* | - | - |
| *„ Lock menu“* | X | - |
| *„Lock all“* | X | X |

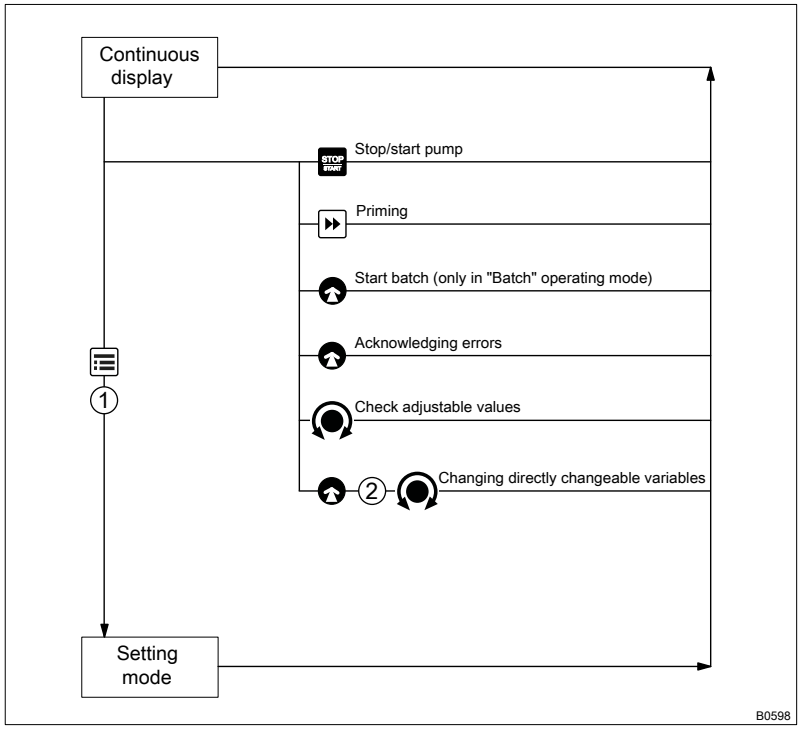


*Fig. 36*

If you have set a *„Password“* - see below, then the identifier will appear after 1 minute in the top left and the specified areas will be locked, if no key has been pressed in the meantime.

Both locks use the same *„Password“*.

## 11.4.2 *„Password “*

➔ *„Menu / Information* ➔ *Service* ➔ *Password* ➔ *...“*

You can enter a password of your choice in the *„Change password“* menu.

## 11.4.3 *„Clear counter“*

➔ *„Menu / Information* ➔ *Service* ➔ *Clear counter* ➔ *...“*

You can reset the counter to "0" in the *„Clear counter“* menu:

- *„Stroke counter“* (total number of strokes)
- *„Volume counter“* (total litres)
- *„Contact memory“*
- *„All“*

To clear: exit the menu by briefly pressing the *[Clickwheel]*.

The values have increased since commissioning of the pump, the last calibration or the last deletion.

## 11.4.4 *„Log book“*

➔ *„Menu / Information* ➔ *Service* ➔ *Log book* ➔ *...“*

You can view the list of *„Log book entries“* here.

A *„Filter“* helps with the overview.

*If you need more detailed log book entries:*

*The metering pump gamma/ X with Bluetooth functionality can display a more extensive log file with pump-related events and e-mail it using a Bluetooth-compatible Android smart device and the “gamma/ X” app.*

### 11.4.4.1 Log book entry - Detailed view

Press the *[Clickwheel]* to obtain more information about a log book entry.

**Information on the detailed view**

| Line | Information |
|---|---|
| 1 | Date/time |
| 2 | Type of entry (fault, warning ...) |
| 3 | Total operating time, total number of strokes |
| 4 | Switching-on duration, stroke rate since switching on |
| 5 | Room temperature, status information on the error (for developers) |

## 11.4.5 *„Replace diaphragm“*

➔ *„Menu / Information* ➔ *Service* ➔ *Diaphragm replacement* ➔ *...“*

You can move the slide rod into the "replacement position" here with *„To replacement position“* to enable the diaphragm to be replaced more easily.

## 11.4.6 *„Display“*

➔ *„Menu / Information* ➔ *Service* ➔ *Display* ➔ *...“*

You can set the *„Contrast“* and the *„Brightness“* of the LCD screen here.

## 11.4.7 *„Factory settings“*

➔ *„Menu / Information* ➔ *Service* ➔ *Factory setting* ➔ *...“*

You can reset the pump to its factory settings here with *„Yes“*

### 11.4.8 Diaphragm part number: XXXXXXX

☰ ➔ *„Menu / Information* ➔ *Service*
➔ *Diaphragm part number: XXXXXXX* ➔ *...“*

You can read off the part number (order number) of the correct diaphragm here.

### 11.4.9 Spare parts kit part number: XXXXXXX

☰ ➔ *„Menu / Information* ➔ *Service*
➔ *Spare parts kit part number: XXXXXXX* ➔ *...“*

You can read off the part number (order number) of the correct spare parts kit here.

## 11.5 *„Language“*

☰ ➔ *„Menu / Information* ➔ *Language* ➔ *...“*

In the *„Language“* menu, you can select the desired operating language.

# 12 Operation

**WARNING!**

**Fire hazard with flammable media**

Only with combustible media: These may start to burn when combined with oxygen.

– During filling and draining of the liquid end, an expert must ensure that feed chemical does not come into contact with oxygen.

This chapter describes all the operating options in a continuous display (several symbols and the pressure display appear at the top in the black bar) for the trained person at the pump.

– *Please also refer to the "Operating/Setting Overview" and "Continuous Displays and Secondary Displays" overviews at the end of the operating instructions and also the "Overview of Equipment and Control Elements" chapter.*

## 12.1 Manual operation

**Stop/start pump**

Stop the pump: Press ) *[STOP/START]*.

Start the pump: Press ) *[STOP/START]* again.

**Priming**

Press ) *[Priming]*.

Turn the *[Clickwheel]* to extend of shorten the priming time during priming.

**Starting a batch**

In *„Batch“* operating mode: Press the *[Clickwheel]* in the *„Push“* continuous display.

**Acknowledging errors**

Press the *[Clickwheel]* to acknowledge error messages that require acknowledgement.

**Checking adjustable variables**

In a continuous display: Another continuous display will appear each time the *[Clickwheel]* engages when turned. (The number depends on the configuration).

**Changing directly changeable variables**

**Changing a variable in the relevant continuous display:**

1. Press the *[Clickwheel]*.
   ⇨ The variable can be changed (highlighted).
2. Turn the *[Clickwheel]*.
   ⇨ The variable is changed.
3. Press the *[Clickwheel]*.
   ⇨ The variable is saved (the highlighting disappears).

If the "lock" - "lock all" has been set - see *„Set Up Overview of the gamma/ X“ on page 78*, first enter the *„Password“* after pressing the *[Clickwheel]*.

**List of directly changeable variables:**

- Capacity
- Stroke rate
- Stroke length
- Factor
- Contact volume
- Batch dosing time
- Concentration

**Set Up Overview of the gamma/ X**

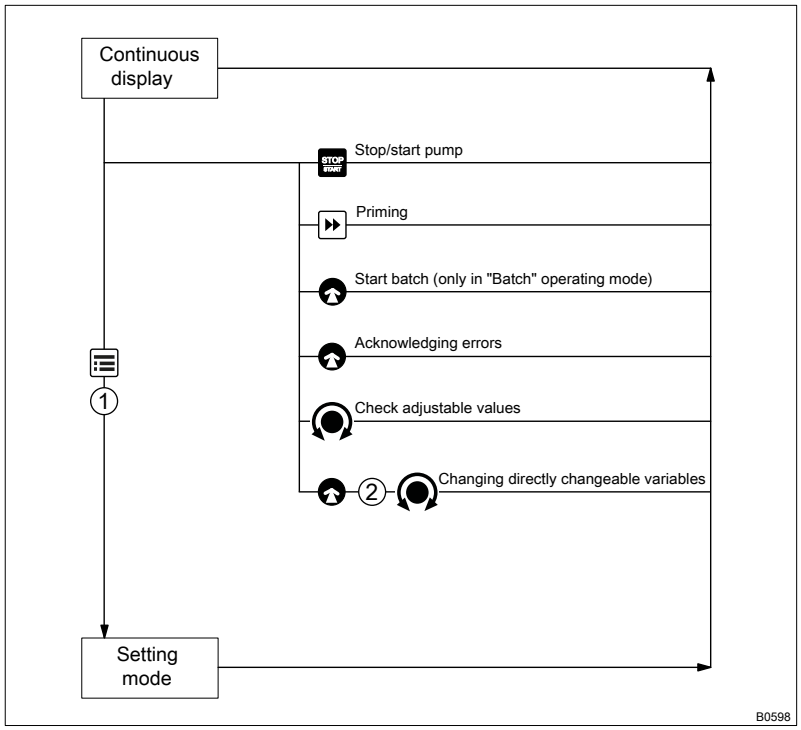


*Fig. 37: Control options using keys and locking options*

Press *[Clickwheel]*
Turn *[Clickwheel]*
① "Lock menu"
② "Lock all"

# 13 Maintenance

**WARNING!**
It is mandatory that you read the safety information and specifications in the "Storage, Transport and Unpacking" chapter prior to shipping the pump.

**WARNING!**
**Fire hazard with flammable media**
Only with combustible media: These may start to burn when combined with oxygen.

– During filling and draining of the liquid end, an expert must ensure that feed chemical does not come into contact with oxygen.

**CAUTION!**
**Warning of feed chemical spraying around**
Feed chemical can spray out of the hydraulic components if they are manipulated or opened due to pressure in the liquid end and adjacent parts of the system.

– Disconnect the pump from the mains power supply and ensure that it cannot be switched on again by unauthorised persons.
– Depressurise the system before commencing any work on hydraulic parts.

*Third party spare parts for the pumps may lead to problems when pumping.*

– *Use only original spare parts.*
– *Use the correct spare parts kits. In the event of doubt, refer to the exploded views and ordering information in the appendix.*

**Standard liquid ends:**

| Interval | Maintenance work | Personnel |
|---|---|---|
| Quarterly* | ■ Check the metering diaphragm for damage** - refer to "Repair".<br>■ Check that the hydraulic lines are fixed firmly to the liquid end.<br>■ Check that the suction valve and discharge valve are fitted tightly.<br>■ Check that the entire liquid end is leak-tight - particularly around the leakage hole - refer to Fig. 38.<br>■ Check that the flow is correct: Press ▶▶ )*[Priming]* to allow the pump to prime briefly.<br>■ Check that the electrical connections are intact.<br>■ Check the integrity of the housing.<br>■ Check that the dosing head screws are tight. | Technical personnel |

* Under normal loading (approx. 30% of continuous operation)

Under heavy loading (e.g. continuous operation): Shorter intervals.

** Check the diaphragm frequently with feed chemicals that put particular pressure on the diaphragm, e.g. those containing abrasive additives.

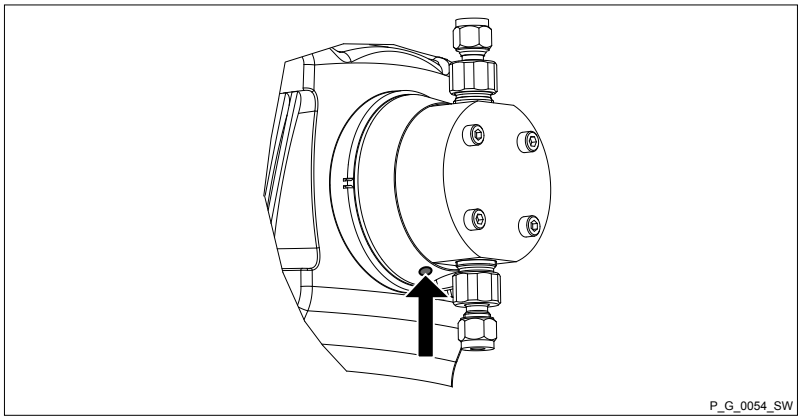


*Fig. 38: Leakage hole*

**Liquid ends with bleed valve:**

| Interval | Maintenance work |
|---|---|
| Quarterly* | In addition:<br>■ Check that the bypass line is fixed firmly to the liquid end.<br>■ Check that the bleed valve is tight.<br>■ Check the discharge and bypass line for kinks.<br>■ Check that the bleed valve is operating correctly. |

* Under normal loading (approx. 30% of continuous operation).

Under heavy loading (e.g. continuous operation): Shorter intervals.

**Tightening torque**

| Data | Value | Unit |
|---|---|---|
| Tightening torque for screws: | 4.5 ... 5.0 | Nm |

# 14 Repairs

Safety information

WARNING!

Danger of electric shock

Unauthorised repairs inside the pump can result in an electric shock.

For this reason, only allow a ProMinent branch or representative to perform repair inside the pump, in particular the following:

- Replacement of damaged mains connection lines
- Replacement of fuses
- Replacement of electronic control

WARNING!

It is mandatory that you read the safety information and specifications in the "Storage, Transport and Unpacking" chapter prior to shipping the pump.

WARNING!

Contact with the feed chemical

Parts that come into contact with the feed chemical are exposed and touched during repair work.

- Protect yourself against the feed chemical in case it is hazardous. Read the safety data sheet on the feed chemical.

CAUTION!

Warning of feed chemical spraying around

Feed chemical can spray out of the hydraulic components if they are manipulated or opened due to pressure in the liquid end and adjacent parts of the system.

- Disconnect the pump from the mains power supply and ensure that it cannot be switched on again by unauthorised persons.
- Depressurise the system before commencing any work on hydraulic parts.

WARNING!

Fire hazard with flammable media

Only with combustible media: These may start to burn when combined with oxygen.

- During filling and draining of the liquid end, an expert must ensure that feed chemical does not come into contact with oxygen.

## 14.1 Cleaning Valves

*Warning of faulty operation*

*Refer to the exploded drawings in the appendix when working on the unit.*

## 14.2 Replacing the Diaphragm

- If necessary take protective measures.
- Adhere to the material safety data sheet for the feed chemical.
- Prevent the escape of feed chemical.
- Ensure that the system is at atmospheric pressure.

1. Empty the liquid end (turn the liquid end upside down and allow the feed chemical to run out; flush out with a suitable medium; flush the liquid end thoroughly when using hazardous feed chemicals!)
2. Set up ☰ ➔ *„Service ➔ Diaphragm replacement ➔ To replacement position“*

   ⇨ The pump moves the diaphragm away from the backplate.

   *Now leave the pump connected to the mains/ power supply so that this state is maintained.*

3. Unscrew the hydraulic connectors on the discharge and suction side.
4. With types with coarse/fine bleed valve: Firstly remove the coarse/ fine bleed valve (grip), then lift off the cover of the liquid end with a screw driver.

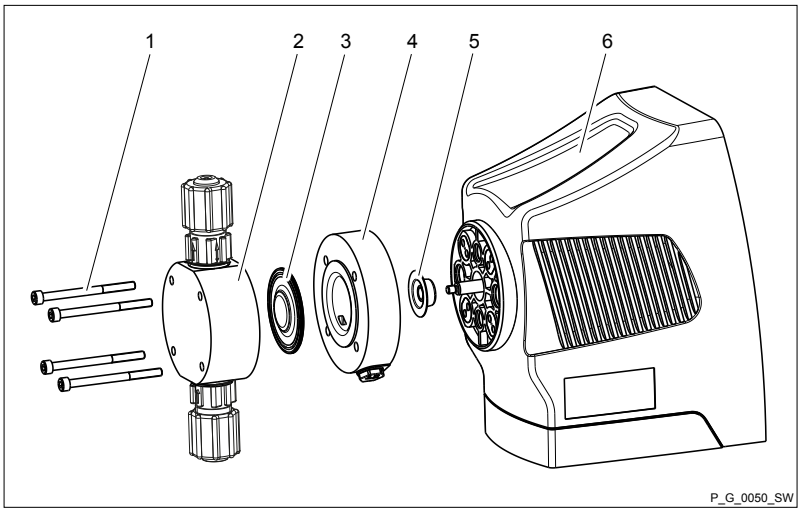


*Fig. 39: Partially exploded view of liquid end*

1 Screws
2 Dosing head
3 Diaphragm

4 Backplate
5 Safety diaphragm
6 Pump housing

5. Remove the screws (1).
6. Remove the dosing head (2) plus screws (1) from the pump - see figure
7. Loosen the diaphragm (3) from the drive axle with a gentle backwards turn in an anticlockwise direction.
8. Unscrew the diaphragm (3) completely from the drive axle.
9. Remove the backplate (4) from the pump housing (6).
10. Check the condition of the safety diaphragm (5) and replace if necessary.
11. Push the safety diaphragm (5) onto the drive axle only until it lies flush with the pump housing (6) and no further!
12. Tentatively screw the new diaphragm (3) onto the drive axle up to the stop - ensure that this is successful, otherwise the pump will subsequently not meter correctly!
13. Unscrew the diaphragm (3) again.
14. Place the backplate (4) on the pump housing (6).

CAUTION!
- Make sure that the leakage hole points downwards when the pump is subsequently fitted - see figure in the "Maintenance" chapter!
- Place the backplate (4) immediately into the correct position on the pump housing (6)! Do not twist the backplate on the pump housing to prevent the safety diaphragm (5) becoming warped!

15. Place the diaphragm (3) into the backplate (4).

CAUTION!
- Do not over-tighten the diaphragm (3) in the following step!
- Ensure that the backplate (4) remains in its position so that the safety diaphragm does not become warped!

16. Hold the backplate (4) firmly and screw the diaphragm (3) in a clockwise direction until it is sitting tightly.
17. Place the dosing head (2) with the screws (1) onto the diaphragm (3) and the backplate (4) - ensure that the suction connector points downwards when the pump is in its subsequent fitting position.
18. Set up ☰ ➔ *„Service ➔ Diaphragm replacement ➔ Back“*

    ⇨ The pump moves the diaphragm back to the backplate.
19. Gently tighten the screws (1) and then tighten them diagonally. See below for the tightening torque.
20. With types with coarse/fine bleed valve: Allow the cover of the liquid end to rest in the dosing head, then press the grip of the bleed valve into the coarse/fine bleed valve.

*Check the tightening torque of the screws after 24 hours of operation!*

Tightening torque

| Data | Value | Unit |
|---|---|---|
| Tightening torque for screws: | 4.5 ... 5.0 | Nm |

## 14.3 Cleaning the Diaphragm Rupture Indicator

**WARNING!**

**Warning of unnoticed escaping of feed chemical**

After the diaphragm rupture indicator has been triggered, any residue of feed chemical residues can interfere with it.

– After the diaphragm rupture indicator has been triggered, clean and test it.

1. First replace the liquid end diaphragm - see above!
2. Unscrew the diaphragm rupture indicator using an SW 14 open-ended spanner.
3. Clean the diaphragm rupture indicator with suitable liquid - if possible using water (polysulphone material).
4. Test the connected diaphragm rupture indicator: fully immerse the tapered section at the front in water.
   ⇨ The continuous display indicates a diaphragm rupture.
5. Thoroughly dry the diaphragm rupture indicator.
   ⇨ The continuous display no longer indicates a diaphragm rupture.
6. Screw the clean and dry diaphragm rupture indicator into the hole until hand-tight and liquid-tight - without using tools!

# 15 Troubleshooting

Safety information

**WARNING!**

**Warning of hazardous feed chemical**

Should a dangerous feed chemical be used: it may escape from the hydraulic components when working on the pump, material failure or incorrect handling of the pump.

- Take appropriate protective measures before working on the pump (e.g. safety glasses, safety gloves, ...). Adhere to the material safety data sheet for the feed chemical.
- Drain and flush the liquid end before working on the pump.

**CAUTION!**

**Warning of feed chemical spraying around**

Feed chemical can spray out of the hydraulic components if they are manipulated or opened due to pressure in the liquid end and adjacent parts of the system.

- Disconnect the pump from the mains power supply and ensure that it cannot be switched on again by unauthorised persons.
- Depressurise the system before commencing any work on hydraulic parts.

**WARNING!**

**Fire hazard with flammable media**

Only with combustible media: These may start to burn when combined with oxygen.

- During filling and draining of the liquid end, an expert must ensure that feed chemical does not come into contact with oxygen.

## 15.1 Faults without a fault message

Faults without a fault message

| Fault description | Cause | Remedy | Personnel |
|---|---|---|---|
| Pump does not prime in spite of full stroke motion and bleeding. | Minor crystalline deposits on the ball seat due to the valves drying out. | Take the suction hose out of the storage tank and thoroughly flush out the liquid end. | Technical personnel |
| | Serious crystalline deposits on the ball seat due to the valves drying out. | Dismantle the valves and clean them - refer to the "Repair" chapter. | Technical personnel |
| Fluid is escaping from the backplate. | The screws in the dosing head are too loose. | Tighten the screws in the dosing head crosswise - refer to the "Repair" chapter for the tightening torque. | Instructed personnel |
| | The diaphragm is not leak-tight. | Replace the diaphragm - refer to the "Repair" chapter.<br>If a diaphragm rupture has been indicated, clean the diaphragm rupture indicator - refer to the "Repair" chapter. | Technical personnel |

| Fault description | Cause | Remedy | Personnel |
|---|---|---|---|
| Green LED display (operating indicator) does not light up. | The wrong mains voltage or no mains voltage is connected. | The specified mains voltage as per the voltage specification can be found on the nameplate. | Electrician |

## 15.2 Faults with error message

### 15.2.1 Fault messages on the LCD screen

In the event of a fault:

- the red LED display lights up.
- an identifier and a message appear on the LCD screen.
- the pump stops.

| Fault description | Cause | Remedy | Personnel |
|---|---|---|---|
| No. 1 The following appear: the identifier I < 4 mA and the message *„Input signal < 4 mA“*. | The pump is in *„Analogue operating mode,“ „“* a fault behaviour has been programmed in the Analogue menu and the control current has fallen below 4 mA. | Eliminate the cause of the low control current or<br>switch the programming of the fault behaviour to *„off“* - refer to the chapter "Setting"-"Settings"-"Operating Mode"-"Analogue". | Technical personnel |
| No. 2 The following appear: the identifier I > 20 mA appears and the message *„Input signal > 20 mA“*. | The pump is in *„Analogue operating mode,“ „“* a fault behaviour has been programmed in the Analogue menu and the control current has risen above 20 mA. | Eliminate the cause of the high control current or<br>switch the programming of the fault behaviour to *„off“* - refer to the chapter "Setting"-"Settings"-"Operating Mode"-"Analogue". | Technical personnel |
| No. 3 The following appear: the identifier and the message *„Level error!“* | The fluid level in the storage tank has reached "Liquid level low 2nd stage". | Top up the storage tank. | Technical personnel |
| No. 4 The following appear: the identifier and the message *„Diaphragm rupture“*. | The diaphragm is broken. | Replace the diaphragm and clean the diaphragm rupture indicator, refer to the "Repair" chapter. | Technical personnel |
| No. 5 The following appear: the identifier and the message *„Defective stroke metering“*. | The dosing monitor reported more defective strokes than was set in the Inputs/Outputs menu. *„“* | Press the *[Clickwheel]* .<br>Investigate and clear the cause. | Technical personnel |
| No. 7 The following appear: the identifier "Temperature" , the message *„Temperature“* and the pump stops. | The ambient temperature is too high or too low. | Change the ambient temperature. The pump starts up automatically. | Technical personnel |
| | The temperature is too high. | Rectify the cause. The pump starts up automatically. | Technical personnel |
| No. 11 The following appear: the identifier p+ and the message *„Overload “*. | The pump has detected too high a back pressure. | Rectify the cause. | Technical personnel |
| No. 12 or 13 The following appear: the identifier and the message *„Mains / Overvoltage “*. | The mains voltage is too high or too low or not connected. | Rectify the cause. | Technical personnel |
| No. 14 The following appear: the identifier and the message *„Air in the dosing head“*. | Gas bubbles in the liquid end (leaks, gaseous medium, cavitation). | Bleed the liquid end and rectify the cause. Seal the system or slow the suction stroke. | Technical personnel |
| No. 16 The following appear: the identifier and the message *„Storage tank overflow“*. | The stroke tank has overflowed. | Remedy the cause (such as too low a factor, too high a contact frequency ...), then: | Technical personnel |

| Fault description | Cause | Remedy | Personnel |
|---|---|---|---|
| | | Press the *[Clickwheel]* (think of the consequences for the process!). | |
| No. 17 The following appear: the identifier I < Imin and the message *„Control signal < Imin“*. | The pump is in *„Analogue operating mode“*-"xx. side band", *„“* a fault behaviour has been programmed in the Analogue menu and the control current has fallen below 4 mA. | Eliminate the cause of the low control current or<br>switch the programming of the fault behaviour to *„off“* - refer to the chapter "Setting"-"Settings"-"Operating Mode"-"Analogue". | Technical personnel |
| No. 18 The following appear: the identifier I > Imax appears and the message *„Control signal > Imax“*. | The pump is in *„Analogue operating mode“*-"xx. side band", *„“* a fault behaviour has been programmed in the Analogue menu and the control current has risen above 20 mA. | Eliminate the cause of the high control current or<br>switch the programming of the fault behaviour to *„off“* - refer to the chapter "Setting"-"Settings"-"Operating Mode"-"Analogue". | Technical personnel |
| No. 19 The following appear: the identifier p- and the message *„Underpressure “*. | The pump has detected too low a back pressure. | Rectify the cause. | Technical personnel |
| No. 20 The following appear: the identifier and the message *„Module communication “*. | The bus contact between the optional module and control room has been disconnected. | Rectify the cause (cable, control room ...) | Technical personnel |

## 15.2.2 Warning messages on the LCD screen

In the event of a warning:

- the yellow LED display lights up!
- an identifier and a message appear on the LCD screen.

| Fault description | Cause | Remedy | Personnel |
|---|---|---|---|
| No. 0 The following appear: *„Level“* and the identifier . | The fluid level in the storage tank has reached "Liquid level low 1st stage". | Top up the storage tank. | Instructed personnel |
| No. 1 The following appear: the identifier and the message *„Diaphragm rupture“*. | The diaphragm is broken. | Replace the diaphragm and clean the diaphragm rupture indicator, refer to the "Repair" chapter. | Technical personnel |
| No. 2 The following appear: the identifier and the message *„Defective stroke metering“*. | The dosing monitor reported more defective strokes than was set in the Inputs/Outputs menu. *„“* | Press the *[Clickwheel]* .<br>Investigate and clear the cause. | Technical personnel |
| No. 3 The following appear: the identifier and the message *„Invalid metering volume“*. | The set metering volume in concentration mode cannot be metered. | Adapt the metering parameters. | Technical personnel |
| No. 4 The following appear: the identifier and the message *„Invalid parameter“*. | A set parameter is invalid. | Adjust the parameter. | Technical personnel |
| No. 7 The following appear: the identifier and the message *„Air in the dosing head“*. | Gas bubbles in the liquid end (leaks, gaseous medium, ...) | Bleed the liquid end and rectify the cause. Seal the system or slow the suction stroke. | Technical personnel |
| No. 8 The following appear: the identifier p+ and the message *„Overload “*. | The pump has detected too high a back pressure. | Rectify the cause. | Technical personnel |

| Fault description | Cause | Remedy | Personnel |
|---|---|---|---|
| No. 10 The following appear: the identifier p- and the message *„Underpressure “*. | The pump has detected too low a back pressure. | Rectify the cause. | Technical personnel |
| No. 11 The following appear: the identifier and the message *„Cavitation“*. | Cavitation in the liquid end. | Adapt the metering parameters. | Technical personnel |

### 15.2.3 All Other Faults

Please contact the ProMinentbranch or representative responsible for you!

## 15.3 Log book

### 15.3.1 Fault messages in the log book

*More information about the messages „ERROR“ - see chapter "Fault messages on the LCD screen".*

Errors

| Log book no. | Description | Acknowledge? |
|---|---|---|
| 0 | System, EEProm error* | X |
| 1 | The pump is in *„Analogue operating mode,“ „“* a fault behaviour has been programmed in the Analogue menu and the control current has risen above 20 mA. | - |
| 2 | The pump is in *„Analogue operating mode,“ „“* a fault behaviour has been programmed in the Analogue menu and the control current has fallen below 4 mA. | - |
| 3 | The fluid level in the storage tank has reached "Liquid level low 2nd stage". | - |
| 4 | The diaphragm is broken. | - |
| 5 | The dosing monitor reports more defective strokes than is set in the Inputs/Outputs menu. *„“* | X |
| 6 | Fault on the sensor for the stroke length.* | - |
| 7 | The ambient temperature is too high or too low. | - |
| 8 | Fault during initialisation. | - |
| 9 | Fault on the magnet. * | - |
| 10 | Fault with the stroke parameters. | - |
| 11 | The pump has detected too high a back pressure. | X |
| 12 | The mains voltage is too high. | X |
| 13 | The mains voltage is too low or not connected. | - |
| 14 | Gas bubbles in the liquid end (leaks, gaseous medium, cavitation). | X |
| 15 | Fault during bleeding. | X |
| 16 | The stroke tank has overflowed. | X |
| 17 | The pump is in *„Analogue operating mode“*-"xx. side band", *„“* a fault behaviour has been programmed in the Analogue menu and the control current has fallen below 4 mA. | - |

| Log book no. | Description | Acknowledge? |
|---|---|---|
| 18 | The pump is in *„Analogue operating mode“*-"xx. side band", *„“* a fault behaviour has been programmed in the Analogue menu and the control current has risen above 20 mA. | - |
| 19 | The pump has detected too low a back pressure. | X |
| 20 | No connection between the optional module and the bus. | - |
| 21 | An optional module is no longer found. | - |

*Please get in touch with the ProMinent head office with this fault.

## 15.3.2 Warning messages in the log book

*More information about the messages „WARNING“ - see chapter "Warning messages on the LCD screen".*

Warnings

| Log book no. | Description |
|---|---|
| 0 | The fluid level in the storage tank has reached "Liquid level low 1st stage". |
| 1 | The diaphragm is broken. |
| 2 | The dosing monitor reports more defective strokes than is set in the Inputs/Outputs menu. *„“* |
| 3 | The metering volume cannot be metered. |
| 4 | Fault with the stroke parameters. |
| 5 | The fan is faulty or not connected. |
| 6 | Fault on the magnet. |
| 7 | Gas bubbles in the liquid end (leaks, gaseous medium, cavitation). |
| 8 | Back pressure too high in the liquid end. |
| 9 | The set capacity cannot be achieved. |
| 10 | Back pressure too low in the liquid end. |
| 11 | Cavitation in the liquid end. |

## 15.3.3 Event messages in the log book

Events

| Log book no. | Description |
|---|---|
| 0 | Dosing head is active ; dongle was inserted. |
| 1 | Parameter menu called up ; dongle was inserted. |
| 2 | Air gap measured ; dongle was inserted. |
| 3 | Too high current was detected but no fault message generated. |
| 4 | The controller data was not plausible. |
| 5 | Automatic bleed was enabled. |
| 6 | The pump status was changed. |

| Log book no. | Description |
|---|---|
| 7 | The pump was reset to factory settings. |
| 8 | The pump was calibrated. |
| 9 | *[START/STOP key]* was pressed. |
| 10 | *[Priming key]* was pressed. |
| 11 | *[Menu key]* was pressed. |
| 12 | The diaphragm was replaced. |
| 13 | The timer performed an action. |
| 14 | A relay has triggered. |
| 15 | The magnet was identified. |

## 15.3.4 Log book entry - Detailed view

Press the *[Clickwheel]* to obtain more information about a log book entry.

**Information on the detailed view**

| Line | Information |
|---|---|
| 1 | Date/time |
| 2 | Type of entry (fault, warning ...) |
| 3 | Total operating time, total number of strokes |
| 4 | Switching-on duration, stroke rate since switching on |
| 5 | Room temperature, status information on the error (for developers) |

# 16 Decommissioning

## Decommissioning

WARNING!

**Danger from chemical residues**

There is normally chemical residue in the liquid end and on the housing after operation. This chemical residue could be hazardous to people.

- It is mandatory that the safety notes in the "Storage, Transport and Unpacking" chapter are read before shipping or transport.
- Thoroughly clean the liquid end and the housing of chemicals and dirt. Adhere to the material safety data sheet for the feed chemical.

WARNING!

**Warning of hazardous feed chemical**

Should a dangerous feed chemical be used: it may escape from the hydraulic components when working on the pump, material failure or incorrect handling of the pump.

- Take appropriate protective measures before working on the pump (e.g. safety glasses, safety gloves, ...). Adhere to the material safety data sheet for the feed chemical.
- Drain and flush the liquid end before working on the pump.

WARNING!

**Fire hazard with flammable media**

Only with flammable media: They can be ignited by oxygen.

- The pump may not work if there is a mixture of feed chemical with oxygen in the liquid end. A specialist may need to take appropriate actions (using inert gas, ...).

CAUTION!

**Warning of feed chemical spraying around**

Feed chemical can spray out of the hydraulic components if they are manipulated or opened due to pressure in the liquid end and adjacent parts of the system.

- Disconnect the pump from the mains power supply and ensure that it cannot be switched on again by unauthorised persons.
- Depressurise the system before commencing any work on hydraulic parts.

***Danger of damage to the device***

*Take into account the information in the "Storage, Transport and Unpacking" chapter if the system is decommissioned for a temporary period.*

1. Disconnect the pump from the mains/power supply.
2. Drain the liquid end by turning the pump upside down and allowing the feed chemical to run out.
3. Flush the liquid end with a suitable medium; flush the dosing head thoroughly when using hazardous feed chemicals!

## Disposal

WARNING!

**Eye injury from compression spring**

A compression spring is fitted in the pump in the drive magnet, which could cause eye injuries when opened.

– Do not dismantle the pump to dispose of it.

CAUTION!

**Risk to the environment from the battery**

There is a battery in the pump, which can have a toxic effect on the environment.

– Separate the battery from the remaining parts.
– Note the pertinent regulations currently applicable in your country!

CAUTION!

**Environmental hazard due to electronic waste**

There are electronic components in the pump, which can have a toxic effect on the environment.

– Separate the electronic components from the remaining parts.
– Note the pertinent regulations currently applicable in your country!

# 17 Technical data

## 17.1 Performance data

gamma/ X at 200 strokes/minute and
100% stroke length

| Type | Pump capacity | | | Connector size<br>outside ∅ x inside ∅ | Suction lift[1] | Priming lift[2] | Max. priming pressure on the suction side |
|---|---|---|---|---|---|---|---|
| | bar | l/h | ml/stroke | mm | m WS | m WS | bar |
| gamma/ X | | | | | | | |
| 2002 | 20 | 2.05 | 0.17 | 6x3 | 6.0 | 2.5 | 5.5 |
| 1602 | 16 | 2.3 | 0.20 | 6x4 | 6.0 | 2.5 | 5.5 |
| 1604 | 16 | 3.6 | 0.30 | 6x4[4] | 5.0 | 3.0 | 3 |
| 0708 | 7 | 7.6 | 0.63 | 8x5[4] | 4.0 | 2.0 | 2 |
| 0414 | 4 | 13.5 | 1.13 | 8x5[4, ****] | 3.0 | 2.5 | 1.5 |
| 0220 | 2 | 19.7 | 1.64 | 12x9[4] | 2.0 | 2.0 | 1 |
| 2504 | 25 | 3.8 | 0.32 | 8x4[4, ***] | 4.0 | 3.0 | 3 |
| 1009 | 10 | 9.0 | 0.75 | 8x5[4] | 3.0 | 3.0 | 2 |
| 0715 | 7 | 14.5 | 1.21 | 8x5[4, ****] | 3.0 | 3.0 | 1.5 |
| 0424 | 4 | 24.0 | 2.00 | 12x9[4] | 3.0 | 3.0 | 1 |
| 0245 | 2 | 45.0 | 3.70 | 12x9 | 2.0 | 2.0 | 0.8 |
| gamma/ X Metering pumps with self-bleeding dosing head SER[3] | | | | | | | |
| 1602 | 10 | 0.9* | 0.08 | 6x4 | 1.8 | 1.2 | 0.5 |
| 1604 | 10 | 1.55* | 0.13 | 6x4 | 1.8 | 1.2 | 0.5 |
| 0708 | 7 | 5.7 | 0.48 | 8x5 | 1.8 | 1.0 | 0.5 |
| 0414 | 4 | 12.0 | 1.00 | 8x5 | 1.8 | 1.4 | 0.5 |
| 0220 | 2 | 17.4 | 1.45 | 12x9 | 1.8 | 1.7 | 0.5 |
| 1009 | 10 | 6.0 | 0.50 | 8x5 | 1.8 | 1.0 | 0.5 |
| 0715 | 7 | 12.9 | 1.08 | 8x5 | 1.8 | 1.4 | 0.5 |
| 0424 | 4 | 19.2 | 1.60 | 12x9 | 1.8 | 1.7 | 0.5 |
| gamma/ X Metering pumps with self-bleeding dosing head SEK[3] | | | | | | | |
| 1602 | 10 | 1.3* | 0.11 | 6x4 | 2.1 | - | 0.5 |
| 1604 | 10 | 2.4* | 0.21 | 6x4 | 2.7 | - | 0.5 |
| 0708 | 7 | 6.8 | 0.57 | 8x5 | 2.0 | - | 0.5 |
| 0414 | 4 | 12.0 | 1.00 | 8x5 | 2.0 | - | 0.5 |
| 0220 | 2 | 18.0 | 1.50 | 12x9 | 2.0 | - | 0.5 |
| 1009 | 10 | 8.0 | 0.67 | 8x5 | 3.0 | - | 0.5 |
| 0715 | 7 | 13.5 | 1.12 | 8x5 | 2.5 | - | 0.5 |
| 0424 | 4 | 20.0 | 1.67 | 12x9 | 2.5 | - | 0.5 |

* - The capacity can significantly fall at pressures above the nominal pressure.

1 - Suction lift with a filled suction line and filled liquid end. With self-bleeding dosing head with air in the suction line.

2 - Priming lift with clean and moist valves. Priming lift at 100% stroke length and free outlet or opened bleed valve.

3 - The given performance data represents guaranteed minimum values, calculated using water as the medium at room temperature. The bypass connection with a self-bleeding dosing head SEK is 6x4 mm.

4 - These pump types are also available with dosing heads for higher-viscosity media (HV). The pump types have a 10 ... 20 % lower capacity and are not self-priming.

*** - With stainless steel design 6 mm connector width

**** - With stainless steel design 12 mm connector width

All data calculated with water at 20 °C.

## 17.2 Accuracy

### 17.2.1 Standard Liquid End

| Data | Value | Unit |
|---|---|---|
| Capacity range of the series | -5 ... +10 | % * |
| Reproducibility | ±2 | % ** |

* - at max. stroke length and max. operating pressure for all material versions

** - at constant conditions and min. 30 % stroke length

### 17.2.2 Self-Bleeding Liquid End

As the self-bleeding liquid end is used with outgassing media and when operating with air bubbles, no dosing accuracy or reproducibility can be provided.

The recommended minimum stroke length with self-bleeding dosing pumps is 50 %.

## 17.3 Viscosity

The liquid ends are suitable for the following viscosity ranges:

| Design | Range | Unit |
|---|---|---|
| Standard | 0 ... 200 | mPas |
| With valve springs | 200 ... 500 | mPas |
| With HV head | 500 ... 3000* | mPas |
| Self-bleeding (SEK) | 0 ... 50 | mPas |

* Even significantly higher with corrected adjusted installation. Contact Technical; Support in Heidelberg.

## 17.4 Material specifications

Standard liquid ends

| Design | Dosing head | Valves | Seals | Balls |
|---|---|---|---|---|
| PPT | Polypropylene | PVDF | PTFE | Ceramic |
| NPT | Clear acrylic | PVDF | PTFE | Ceramic |
| PVT | PVDF | PVDF | PTFE | Ceramic |
| PPE | Polypropylene | EPDM | EPDM | Ceramic |
| PPB | Polypropylene | FKM | FKM | Ceramic |
| NPE | Clear acrylic | EPDM | EPDM | Ceramic |
| NPB | Clear acrylic | FKM | FKM | Ceramic |
| TTT | PTFE | PTFE | PTFE | Ceramic |
| SST | Stainless steel 1.4404 | Stainless steel 1.4404/1.4571 | PTFE | Ceramic |

Diaphragm: with PTFE coating.

FKM = fluorine rubber

Pump

Housing parts: polyphenylene ether (PPE with fibreglass)

## 17.5 Electrical data

Design: 100 - 230 V ±10%, 50/60 Hz, gamma/ X GMXa

| Parameter | M70 | M85 |
|---|---|---|
| Nominal power**, approx. | 25 W | 30 W |
| Current I eff | 0.25 ... 0.10 A | 0.30 ... 0.12 A |
| Switch on peak current (for 3 ...5 ms) | 20 A | 20 A |
| Fuse* | 2.5 AT | 2.5 AT |

** with relay closed: The nominal power rises by 1 W.

* Fuses must have VDE, UL and CSA certification. e.g. type 19195 manufactured by Wickmann in compliance with IEC Publ. 127 - 2/3

## 17.6 Temperatures

Pump, fully assembled

| Data | Value | Unit |
|---|---|---|
| Storage and transport temperature: | -20 ... +50 | °C |
| Ambient temperature in operation (power end/drive and control): | -10 ... +45 | °C |
| Medium temperature: | -10 °C ... see following table | |

Liquid ends

| Material version | Long term | Temporary * |
|---|---|---|
| PP | 50 °C | 100 °C |
| NP | 45 °C | 60 °C |
| PV | 50 °C | 120 °C |
| SS | 50 °C | 120 °C |
| TT | 50 °C | 120 °C |

* Max. temp., for 15 min at max. 2 bar, depending on the ambient temperature

## 17.7 Climate

| Data | Value | Unit |
|---|---|---|
| Maximum air humidity*: | 95 | % relative humidity |

* non-condensing

Test: Humid heat, cyclical

in accordance with EN 680068-2-30: 2005

## 17.8 Degree of Protection and Safety Requirements

Degree of protection

Protection against contact and humidity:

IP 66 according to DIN EN 60529 with contamination level 2

NEMA 4X / indoor as per NEMA 250

Safety Requirements

Degree of protection:

1 - mains power connection with protective earth conductor

## 17.9 Compatibility

Unlike the gamma/ L product range, compatibility is guaranteed with the following components:

- Control cable Beta® 5-wire for "External" function.
- Control cable gamma/Vario 2-, 4- and 5-wire for the "External" function
- Level switch 2-stage (gamma / Beta® / delta®)
- Dosing line cross-sections for gamma / Beta®
- Standard connector kit for gamma / Beta®
- Wall brackets for gamma / Beta®
- Dosing tanks and fixing plates
- Distance between suction and pressure connector
- Distance between the connectors and the pump fixing holes
- Distance between the pump fixing holes
- Identical use of accessories, such as back pressure valves, multifunctional valves and flushing assembly
- Compatibility of resistance by the equivalence of the material used for the liquid ends

Compatibility to the gamma/ L product range is not guaranteed for the following points:

- External dimensions of the pump
- Distance between the support surface for the mounting foot and the centre of the dosing head
- Dosing monitor

## 17.10 Shipping weight

**Shipping weight of gamma/ X types - in kg**

| Material | Types | |
|---|---|---|
| | 2002, 1602, 1604, 0708, 0414, 0220 | 2504, 1009, 0715, 0424, 0245 |
| PP, NP, PV, TT | 3.6 .. 3.7 | 4.9 ... 5.2 |
| SS | 4.1 ... 5.0 | 5.5 ... 7.0 |

## 17.11 Sound pressure level

**Sound pressure level**

Sound pressure level LpA < 70 dB according to EN ISO 20361

at maximum stroke length, maximum stroke rate, maximum back pressure (water)

# 18 Exploded Drawings and Ordering Information

## 18.1 Exploded drawings

Liquid end gamma/ X 1602 - 1604 PP_2

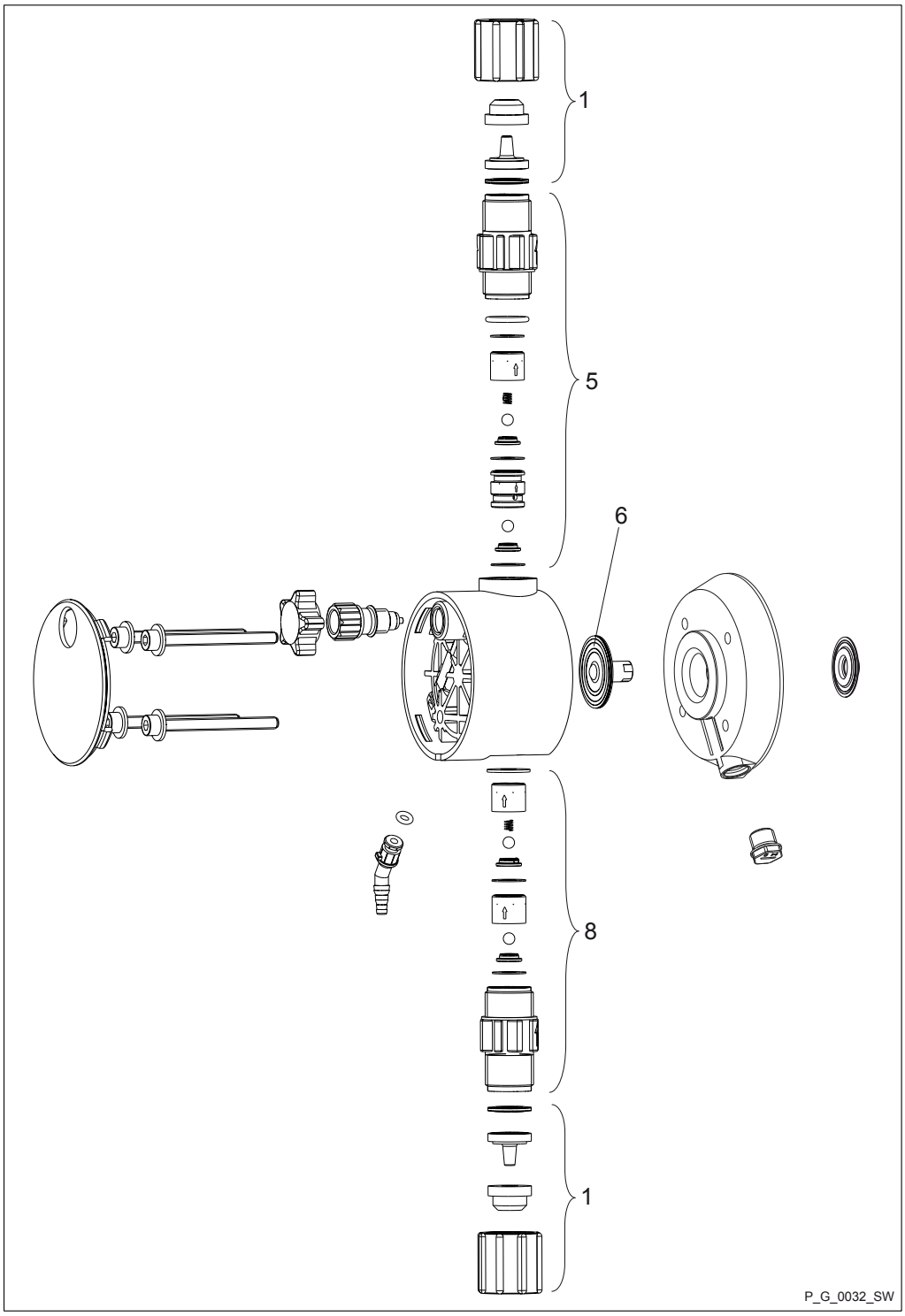


*Fig. 40*

Spare parts for liquid end gamma/ X 1602 - 1604 PP_2

| Pos. | Description |
|---|---|
| 1 | Connector kit |
| 5 | Discharge valve |
| 6 | Diaphragm |
| 8 | Suction valve |

Liquid end gamma/ X 1602 PP_2

| | PPE2 | PPB2 | PPT2 |
|---|---|---|---|
| Liquid end | 1050931 | 1050900 | 1050942 |
| Spare parts kit | 1001646 | 1001654 | 1023109 |
| Diaphragm | 1000246 | 1000246 | 1000246 |

Liquid end gamma/ X 1604 PP_2

| | PPE2 | PPB2 | PPT2 |
|---|---|---|---|
| Liquid end | 1050932 | 1050901 | 1050943 |
| Spare parts kit | 1039989 | 1039987 | 1035332 |
| Diaphragm | 1034612 | 1034612 | 1034612 |

Liquid end gamma/ X 0708 (1009) - 0220 (0424) PP_2

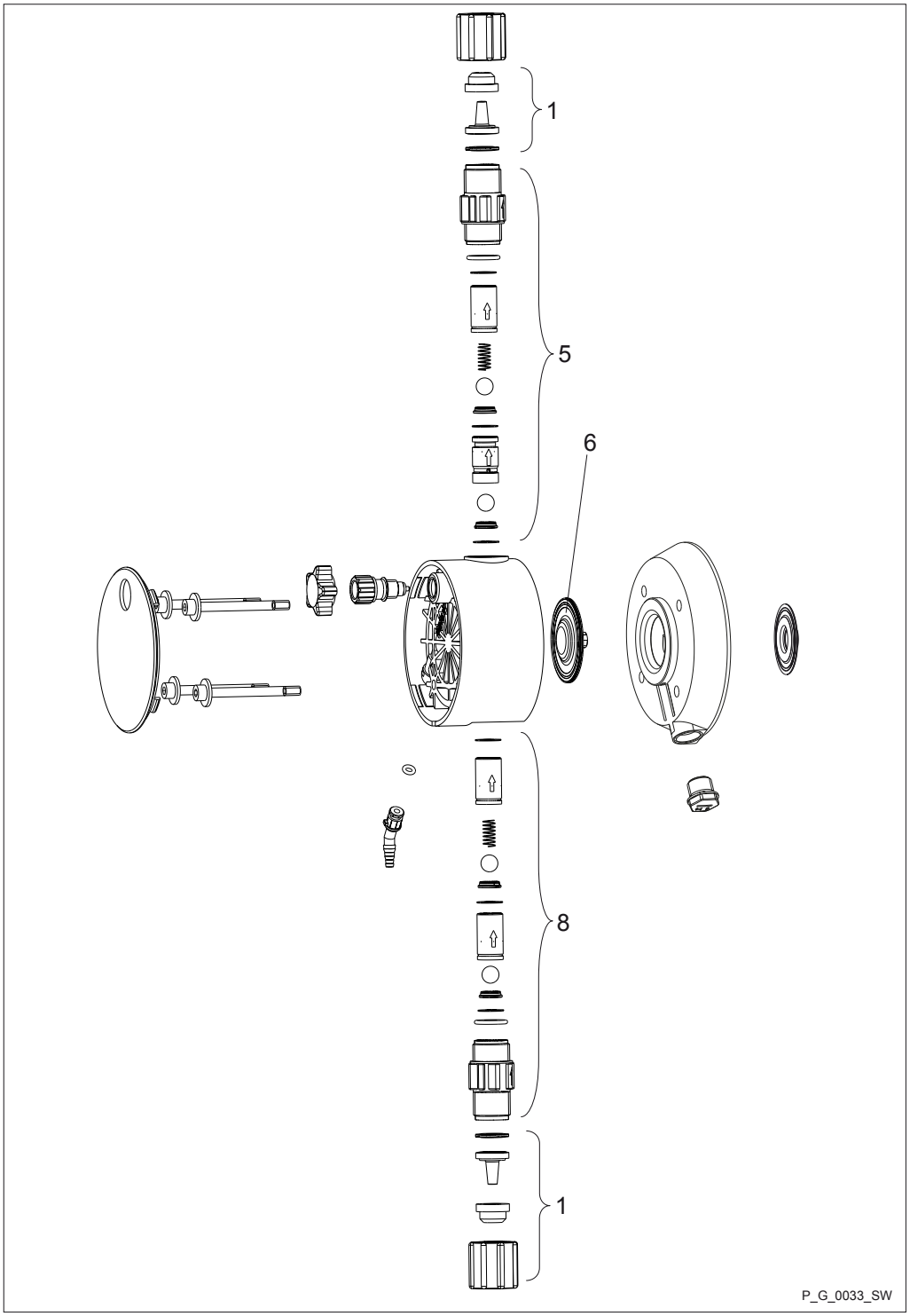


*Fig. 41*

Spare parts for liquid end gamma/ X 0708 (1009) - 0220 (0424) PP_2

| Pos. | Description |
|---|---|
| 1 | Connector kit |
| 5 | Discharge valve |
| 6 | Diaphragm |
| 8 | Suction valve |

Liquid end gamma/ X 0708 (1009) PP_2

| | PPE2 | PPB2 | PPT2 |
|---|---|---|---|
| Liquid end | 1050933 | 1050902 | 1050944 |
| Spare parts kit | 1001648 | 1001656 | 1023111 |
| Diaphragm | 1000248 | 1000248 | 1000248 |

Liquid end gamma/ X 0414 (0715) PP_2

| | PPE2 | PPB2 | PPT2 |
|---|---|---|---|
| Liquid end | 1050934 | 1050903 | 1050945 |
| Spare parts kit | 1001649 | 1001657 | 1023112 |
| Diaphragm | 1000249 | 1000249 | 1000249 |

Liquid end gamma/ X 0220 (0424) PP_2

| | PPE2 | PPB2 | PPT2 |
|---|---|---|---|
| Liquid end | 1050935 | 1050924 | 1050946 |
| Spare parts kit | 1051096 | 1051085 | 1051129 |
| Diaphragm | 1045456 | 1045456 | 1045456 |

Liquid end gamma/ X 0245 PP_0

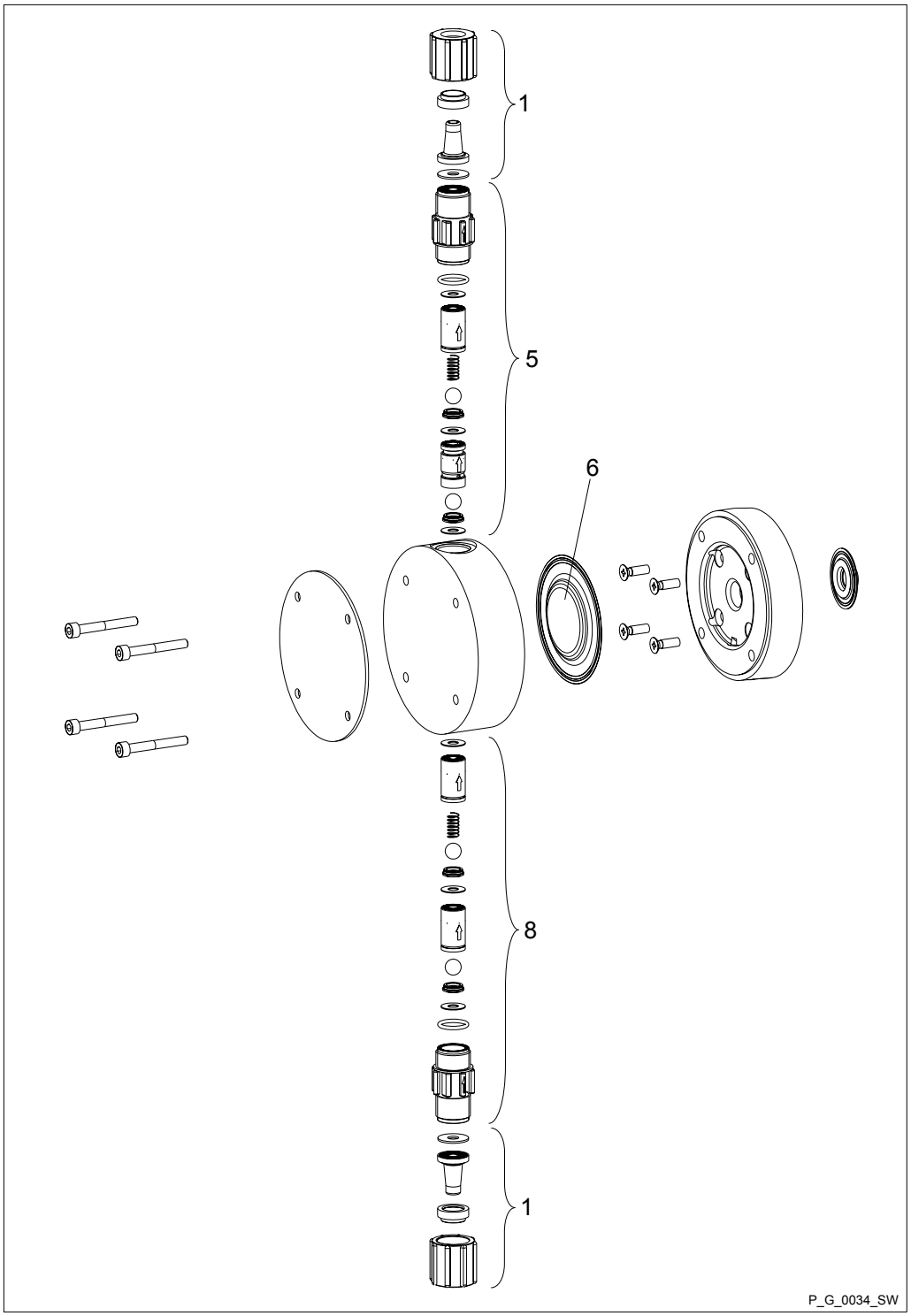


*Fig. 42*

Spare parts kit for liquid end gamma/ X 0245 PP_0

| Pos. | Description |
|---|---|
| 1 | Connector kit |
| 5 | Discharge valve |
| 6 | Diaphragm |
| 8 | Suction valve |

Liquid end gamma/ X 0245

| | PPE0 | PPB0 | PPT0 |
|---|---|---|---|
| Liquid end | 1050936 | 1050925 | 1050947 |
| Spare parts kit | 1051097 | 1051086 | 1051130 |
| Diaphragm | 1045443 | 1045443 | 1045443 |

Liquid end gamma/ X 1602 - 2504 NP_0 and NP_2

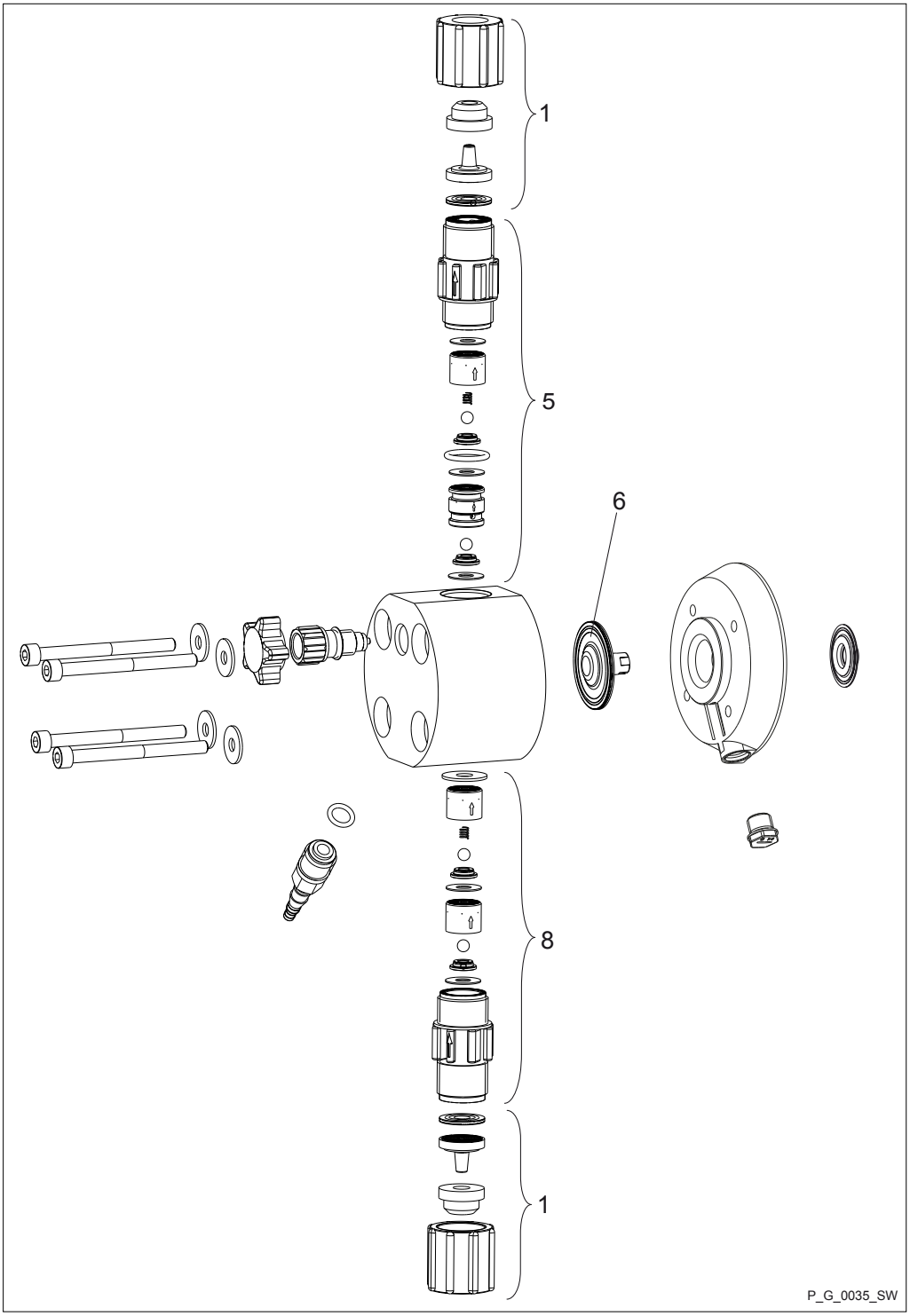


*Fig. 43*

Spare parts for liquid end gamma/ X 1602 - 2504 NP NP_0 and NP_2

| Pos. | Description |
|---|---|
| 1 | Connector kit |
| 5 | Discharge valve |
| 6 | Diaphragm |
| 8 | Suction valve |

Liquid end gamma/ X 2002

| | NPE_ | NPB_ | NPT_ |
|---|---|---|---|
| Liquid end with bleed valve, _2 | 1050965 | 1050948 | 1050982 |
| Liquid end without bleed valve, _0 | 1050971 | 1050954 | 1050988 |
| Spare parts kit | 1001715 | 1001723 | 1023109 |
| Diaphragm | 1000246 | 1000246 | 1000246 |

Liquid end gamma/ X 1602

| | NPE_ | NPB_ | NPT_ |
|---|---|---|---|
| Liquid end with bleed valve_2 | 1051073 | 1051071 | 1051087 |
| Liquid end without bleed valve, _0 | 1051084 | 1051072 | 1051088 |
| Spare parts kit | 1001715 | 1001723 | 1023109 |
| Diaphragm | 1000246 | 1000246 | 1000246 |

Liquid end gamma/ X 2504

| | NPE_ | NPB_ | NPT_ |
|---|---|---|---|
| Liquid end with bleed valve, _2 | 1051175 | 1051163 | 1051179 |
| Liquid end without bleed valve, _0 | 1051176 | 1051174 | 1051180 |
| Spare parts kit | 1039988 | 1039986 | 1035332 |
| Diaphragm | 1034612 | 1034612 | 1034612 |

Liquid end gamma/ X 1604

| | NPE_ | NPB_ | NPT_ |
|---|---|---|---|
| Liquid end with bleed valve, _2 | 1050966 | 1050949 | 1050983 |
| Liquid end without bleed valve, _0 | 1050972 | 1050955 | 1050989 |
| Spare parts kit | 1039988 | 1039986 | 1035332 |
| Diaphragm | 1034612 | 1034612 | 1034612 |

Liquid end gamma/ X 0708 (1009) - 0220
(0424) NP_0 and NP_2

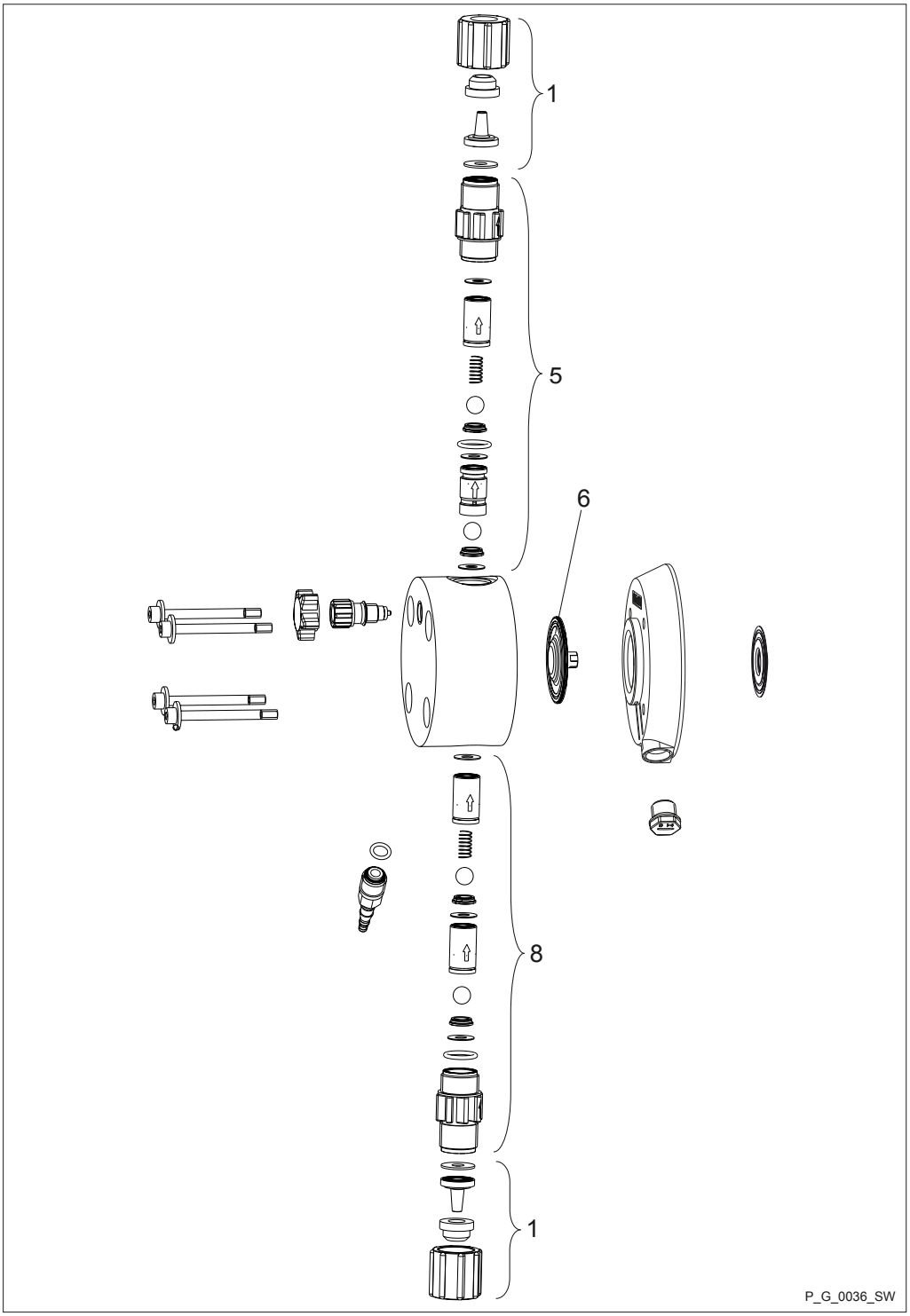


*Fig. 44*

Spare parts for liquid end gamma/ X 0708 (1009) - 0220 (0424) NP_0 and NP_2

| Pos. | Description |
|---|---|
| 1 | Connector kit |
| 5 | Discharge valve |
| 6 | Diaphragm |
| 8 | Suction valve |

Liquid end gamma/ X 0708 (1009)

| | NPE_ | NPB_ | NPT_ |
|---|---|---|---|
| Liquid end with bleed valve, _2 | 1050967 | 1050950 | 1050984 |
| Liquid end without bleed valve, _0 | 1050973 | 1050956 | 1050990 |
| Spare parts kit | 1001717 | 1001725 | 1023111 |
| Diaphragm | 1000248 | 1000248 | 1000248 |

Liquid end gamma/ X 0414 (0715)

| | NPE_ | NPB_ | NPT_ |
|---|---|---|---|
| Liquid end with bleed valve, _2 | 1050968 | 1050951 | 1050985 |
| Liquid end without bleed valve, _0 | 1050974 | 1050957 | 1050991 |
| Spare parts kit | 1001718 | 1001726 | 1023112 |
| Diaphragm | 1000249 | 1000249 | 1000249 |

Liquid end gamma/ X 0220 (0424)

| | NPE_ | NPB_ | NPT_ |
|---|---|---|---|
| Liquid end with bleed valve, _2 | 1050969 | 1050952 | 1050986 |
| Liquid end without bleed valve, _0 | 1050975 | 1050958 | 1050992 |
| Spare parts kit | 1051118 | 1051107 | 1051129 |
| Diaphragm | 1045456 | 1045456 | 1045456 |

Liquid end gamma/ X 0245 NP_0 and NP_2

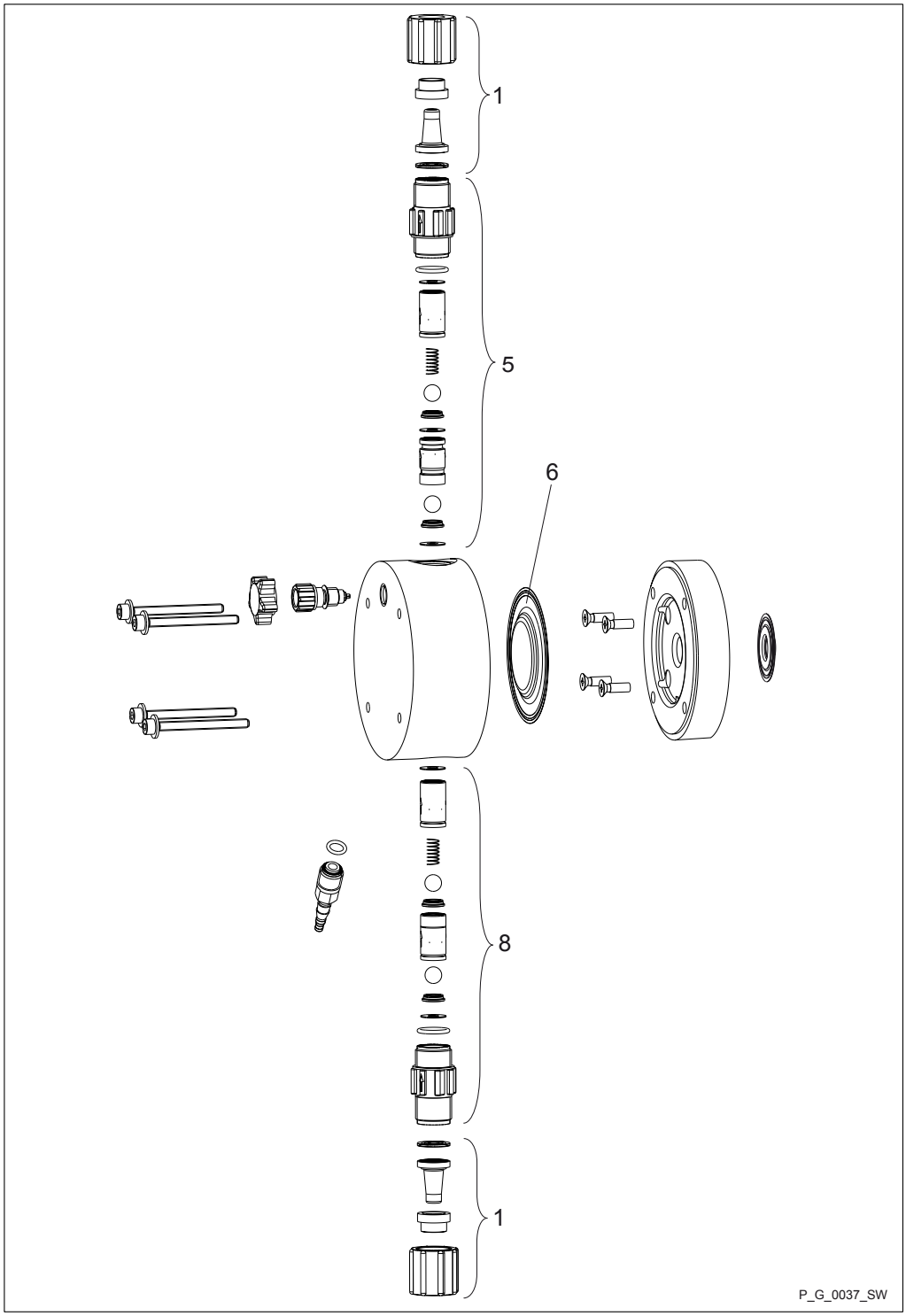


*Fig. 45*

Spare parts for liquid end gamma/ X 0245 NPT0 and NPT2

| Pos. | Description |
|---|---|
| 1 | Connector kit |
| 5 | Discharge valve |
| 6 | Diaphragm |
| 8 | Suction valve |

Liquid end gamma/ X 0245

| | NPE_ | NPB_ | NPT_ |
|---|---|---|---|
| Liquid end with bleed valve, _2 | 1050970 | 1050953 | 1050987 |
| Liquid end without bleed valve, _0 | 1050976 | 1050959 | 1050993 |
| Spare parts kit | 1051119 | 1051108 | 1051130 |
| Diaphragm | 1045443 | 1045443 | 1045443 |

Liquid end gamma/ X 1602 - 1604 PVT2

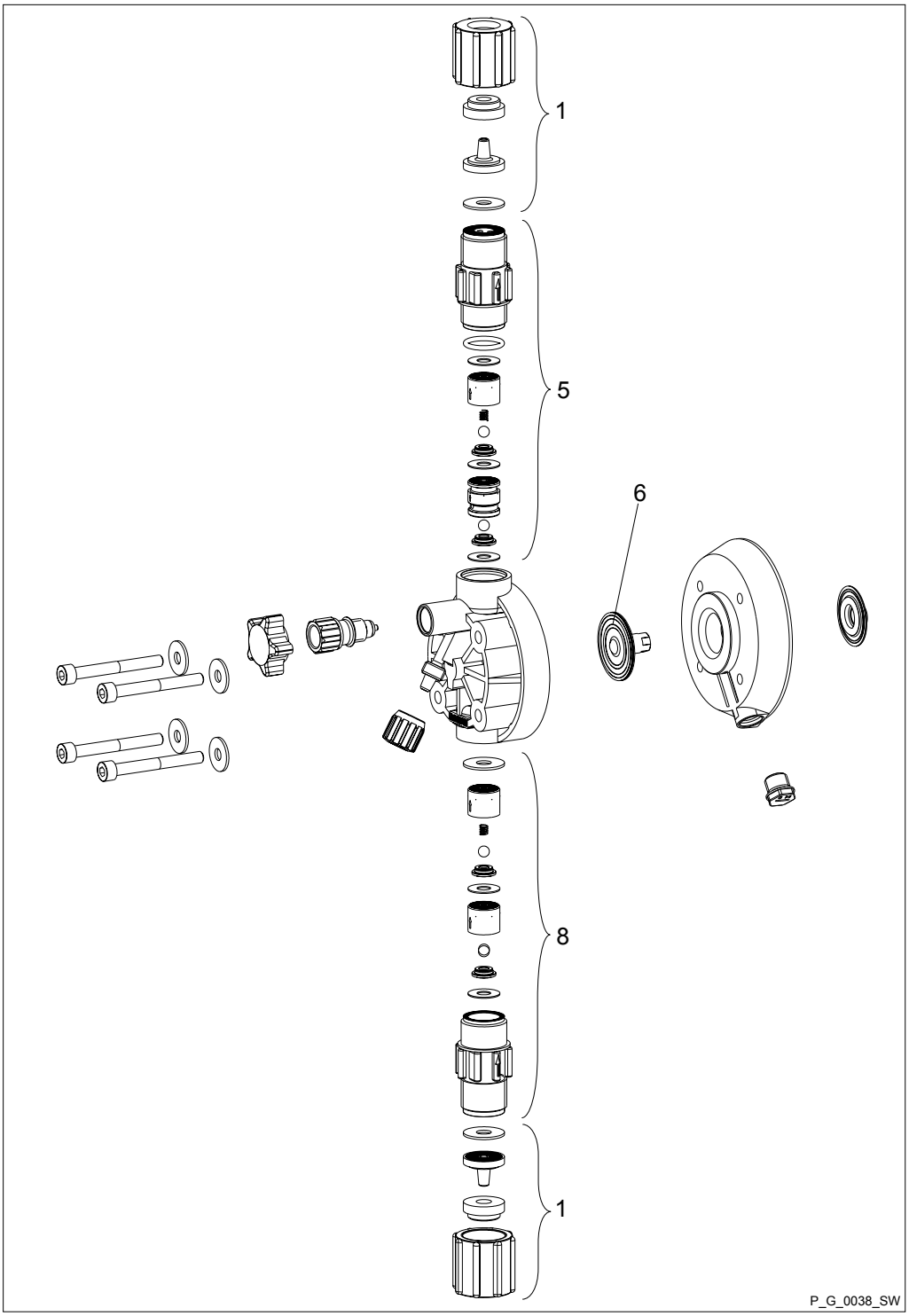


*Fig. 46*

Spare parts for liquid end gamma/ X 1602 - 1604 PVT2

| Pos. | Description |
|---|---|
| 1 | Connector kit |
| 5 | Discharge valve |
| 6 | Diaphragm |
| 8 | Suction valve |

Liquid end gamma/ X 1602

| | PVT2 |
|---|---|
| Liquid end | 1050994 |
| Spare parts kit | 1023109 |
| Diaphragm | 1000246 |

Liquid end gamma/ X 1604

| | PVT2 |
|---|---|
| Liquid end | 1050995 |
| Spare parts kit | 1035332 |
| Diaphragm | 1034612 |

Liquid end gamma/ X 0708 (1009) - 0220 (0424) PVT2

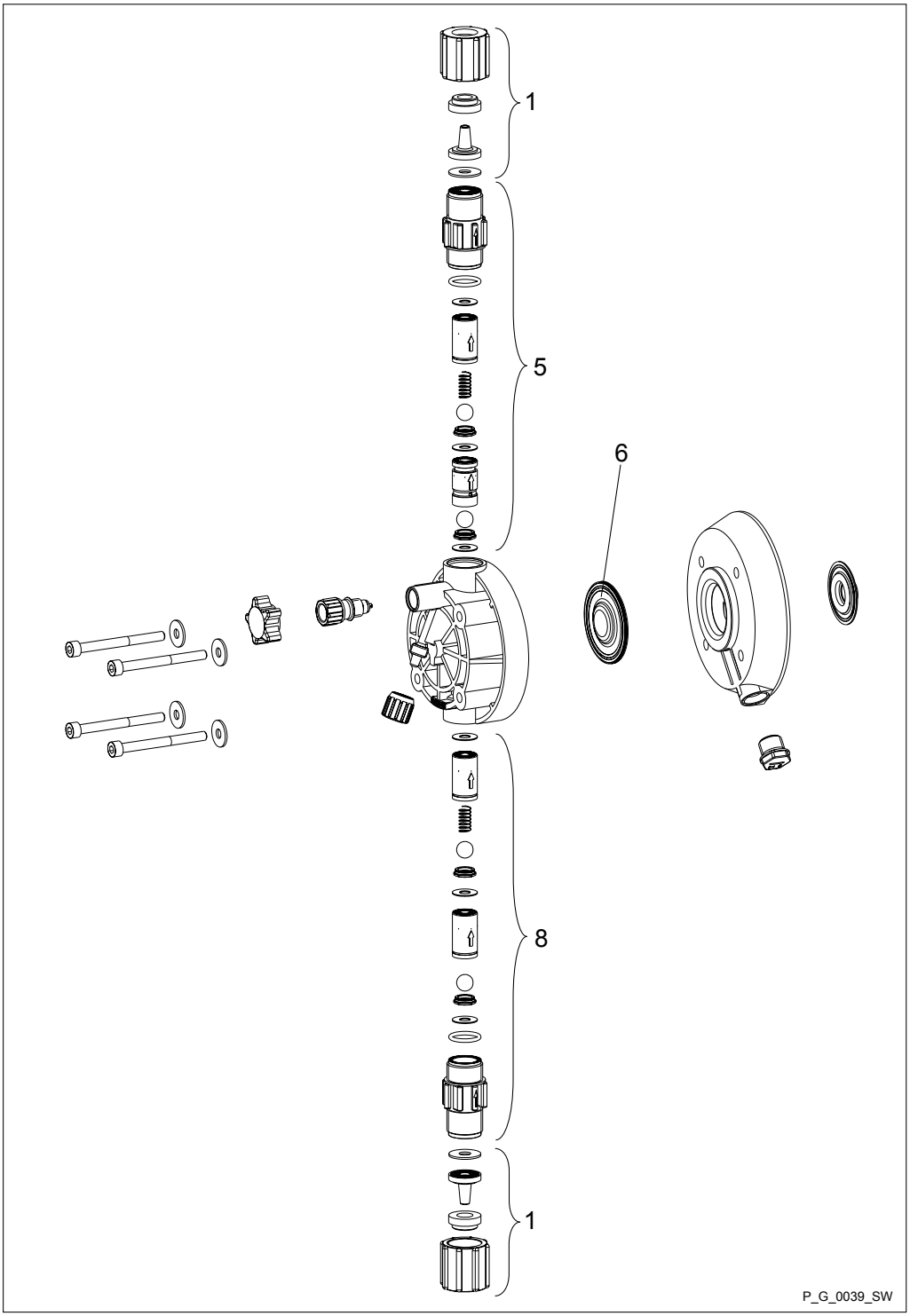


*Fig. 47*

Spare parts kit for liquid end gamma/ X 0708 (1009) - 0220 (0424) PVT2

| Pos. | Description |
|---|---|
| 1 | Connector kit |
| 5 | Discharge valve |
| 6 | Diaphragm |
| 8 | Suction valve |

Liquid end gamma/ X 0708 (1009)

| | PVT2 |
|---|---|
| Liquid end | 1050996 |
| Spare parts kit | 1023111 |
| Diaphragm | 1000248 |

Liquid end gamma/ X 0414 (0715)

| | PVT2 |
|---|---|
| Liquid end | 1050997 |
| Spare parts kit | 1023112 |
| Diaphragm | 1000249 |

Liquid end gamma/ X 0220 (0424)

| | PVT2 |
|---|---|
| Liquid end | 1050998 |
| Spare parts kit | 1051129 |
| Diaphragm | 1045456 |

Liquid end gamma/ X 0245 PVT0

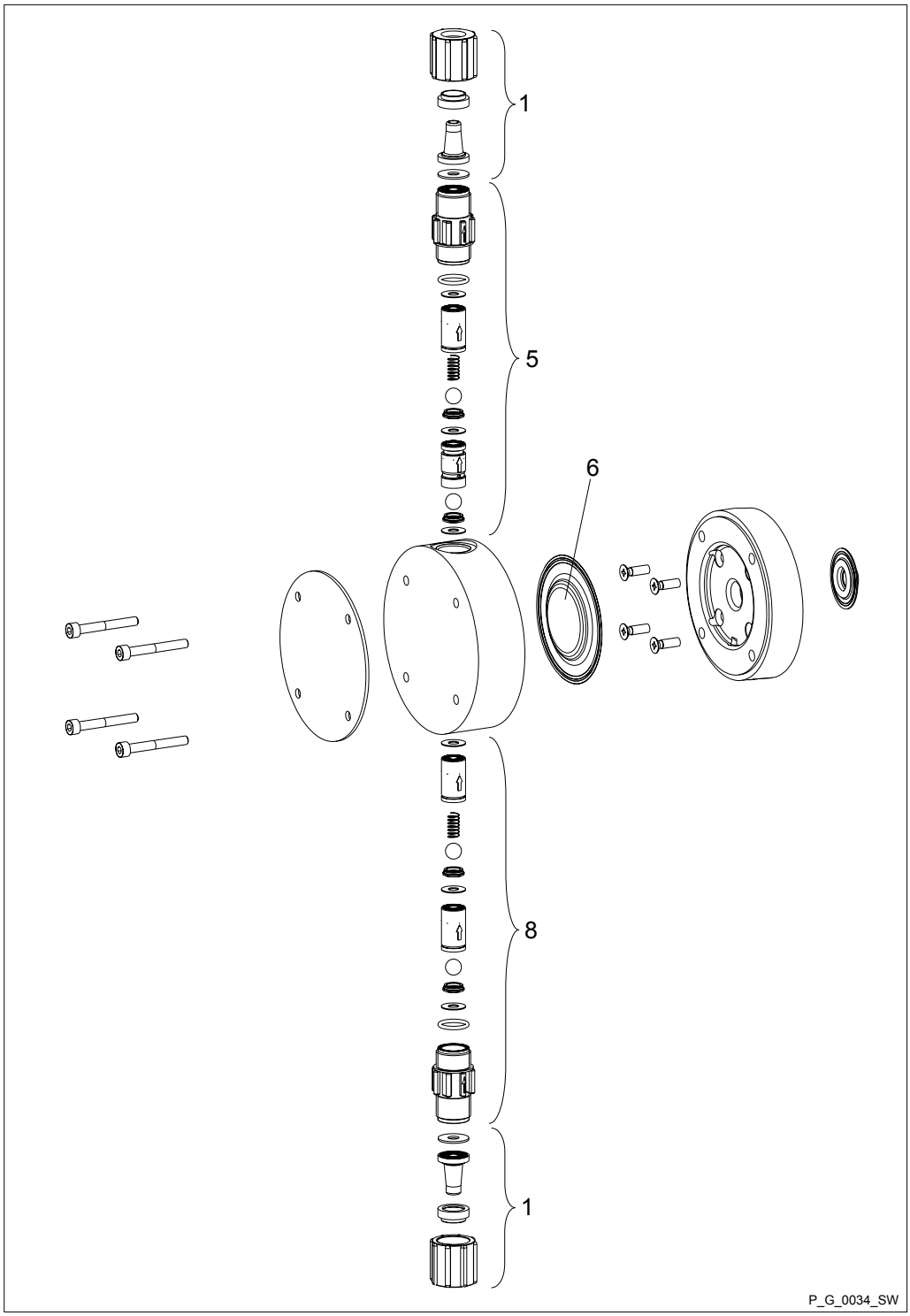


*Fig. 48*

Spare parts kit for liquid end gamma/ X 0245 PVT0

| Pos. | Description |
|---|---|
| 1 | Connector kit |
| 5 | Discharge valve |
| 6 | Diaphragm |
| 8 | Suction valve |

Liquid end gamma/ X 0245

| | PVT0 |
|---|---|
| Liquid end | 1050999 |
| Spare parts kit | 1051130 |
| Diaphragm | 1045443 |

Liquid end gamma/ X 1604 - 0220 (0424)
PV_4

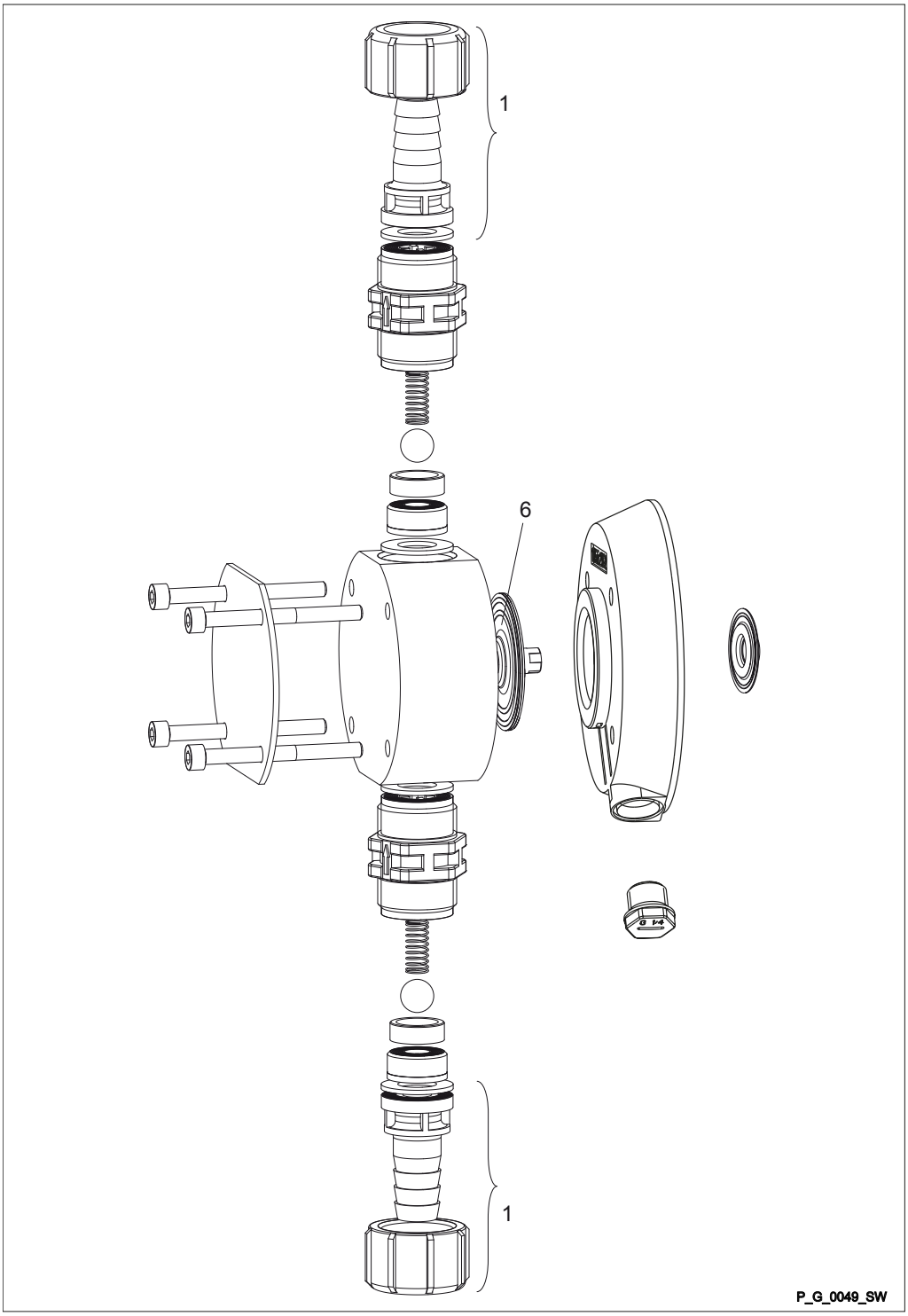


*Fig. 49*

Spare parts kit for liquid end gamma/ X 1604 - 0220 (0424) PV_4

| Pos. | Description |
|---|---|
| 1 | Connector kit with hose nozzle |
| 6 | Diaphragm |

Liquid end gamma/ X 1604

| | PV_4 |
|---|---|
| Liquid end | 1051000 |
| Spare parts kit | 1035342 |
| Diaphragm | 1034612 |

Liquid end gamma/ X 0708 (1009)

| | PV_4 |
|---|---|
| Liquid end | 1051001 |
| Spare parts kit | 1019067 |
| Diaphragm | 1000248 |

Liquid end gamma/ X 0414 (0715)

| | PV_4 |
|---|---|
| Liquid end | 1051002 |
| Spare parts kit | 1019069 |
| Diaphragm | 1000249 |

Liquid end gamma/ X 0220 (0424)

| | PV_4 |
|---|---|
| Liquid end | 1051003 |
| Spare parts kit | 1051134 |
| Diaphragm | 1045456 |

Liquid end gamma/ X 1602 - 1604 TTT0

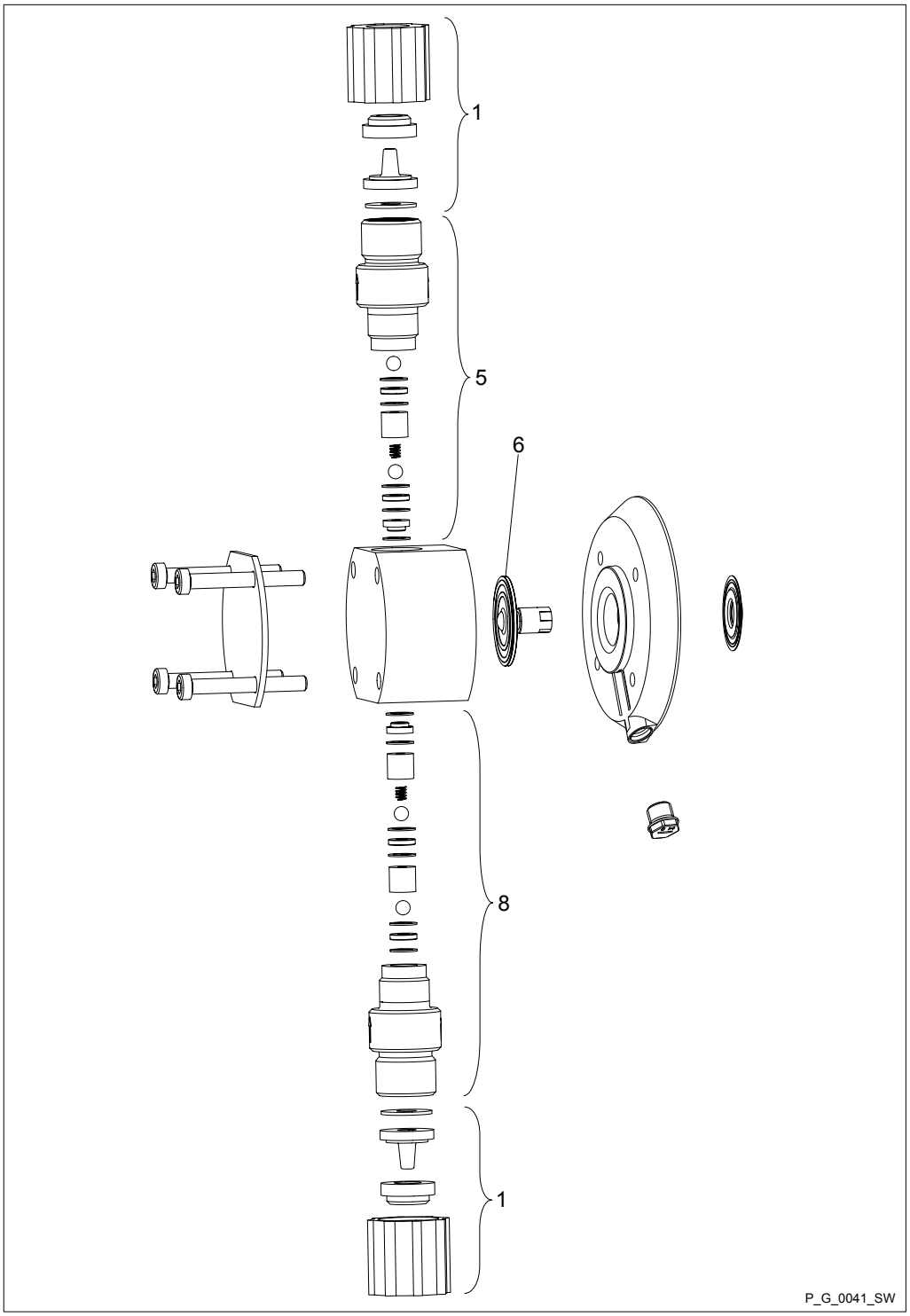


*Fig. 50*

Spare parts for liquid end gamma/ X 1602 - 1604 TTT0

| Pos. | Description |
|---|---|
| 1 | Connector kit |
| 5 | Discharge valve |
| 6 | Diaphragm |
| 8 | Suction valve |

Liquid end gamma/ X 1602

| | TTT0 |
|---|---|
| Liquid end | 1051016 |
| Spare parts kit | 1001739 |
| Diaphragm | 1000246 |

Liquid end gamma/ X 1604

| | TTT0 |
|---|---|
| Liquid end | 1051017 |
| Spare parts kit | 1035331 |
| Diaphragm | 1034612 |

Liquid end gamma/ X 0708 (1009) - 0220 (0424) TTT0

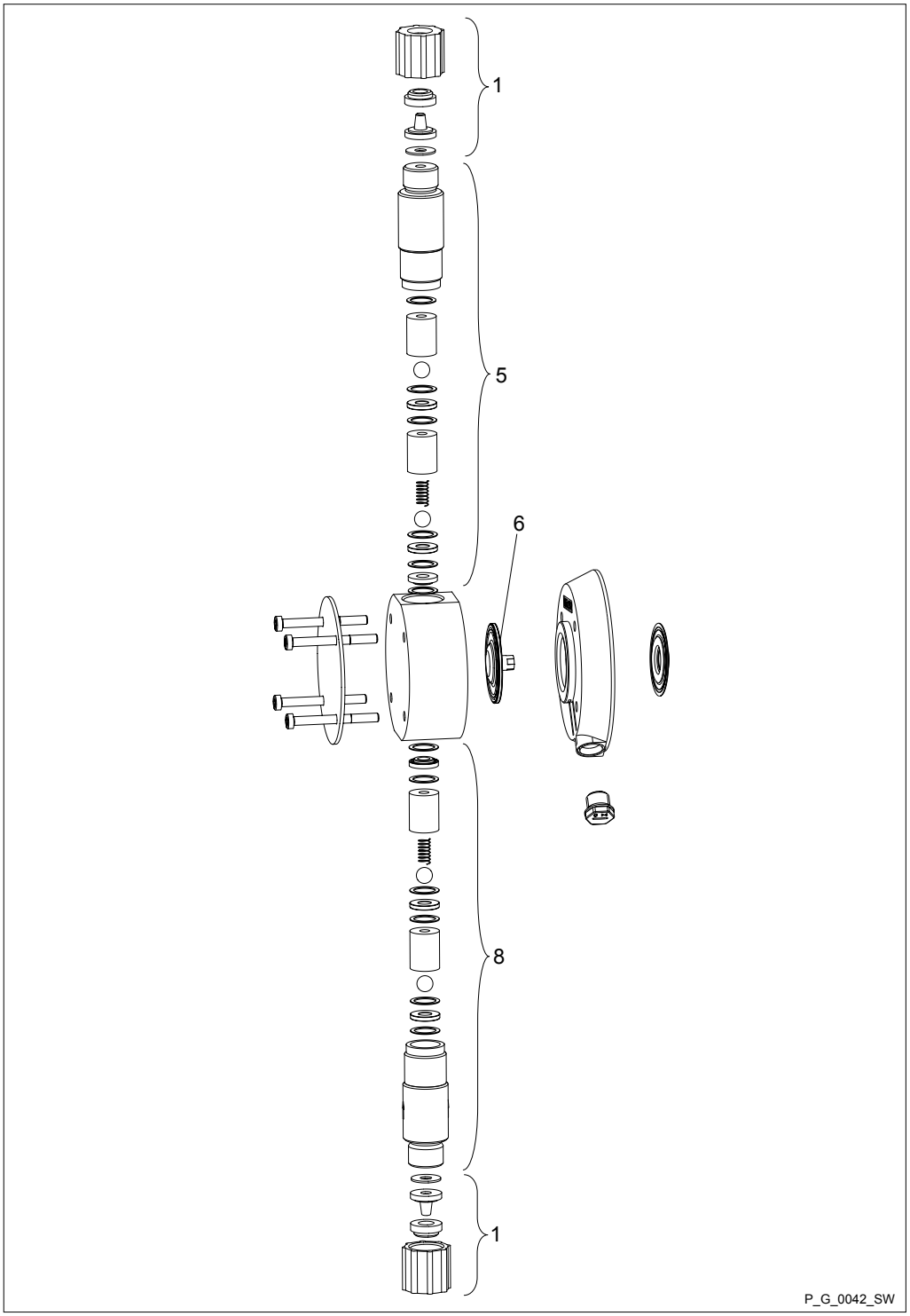


*Fig. 51*

Liquid end gamma/ X 0708 (1009) - 0220 (0424) TTT0

| Pos. | Description |
|---|---|
| 1 | Connector kit |
| 5 | Discharge valve |
| 6 | Diaphragm |
| 8 | Suction valve |

Liquid end gamma/ X 0708 (1009)

| | TTT0 |
|---|---|
| Liquid end | 1051018 |
| Spare parts kit | 1001741 |
| Diaphragm | 1000248 |

Liquid end gamma/ X 0414 (0715)

| | TTT0 |
|---|---|
| Liquid end | 1051019 |
| Spare parts kit | 1001742 |
| Diaphragm | 1000249 |

Liquid end gamma/ X 0220 (0424)

| | TTT0 |
|---|---|
| Liquid end | 1051020 |
| Spare parts kit | 1051151 |
| Diaphragm | 1045456 |

Liquid end gamma/ X 0245 TTT0

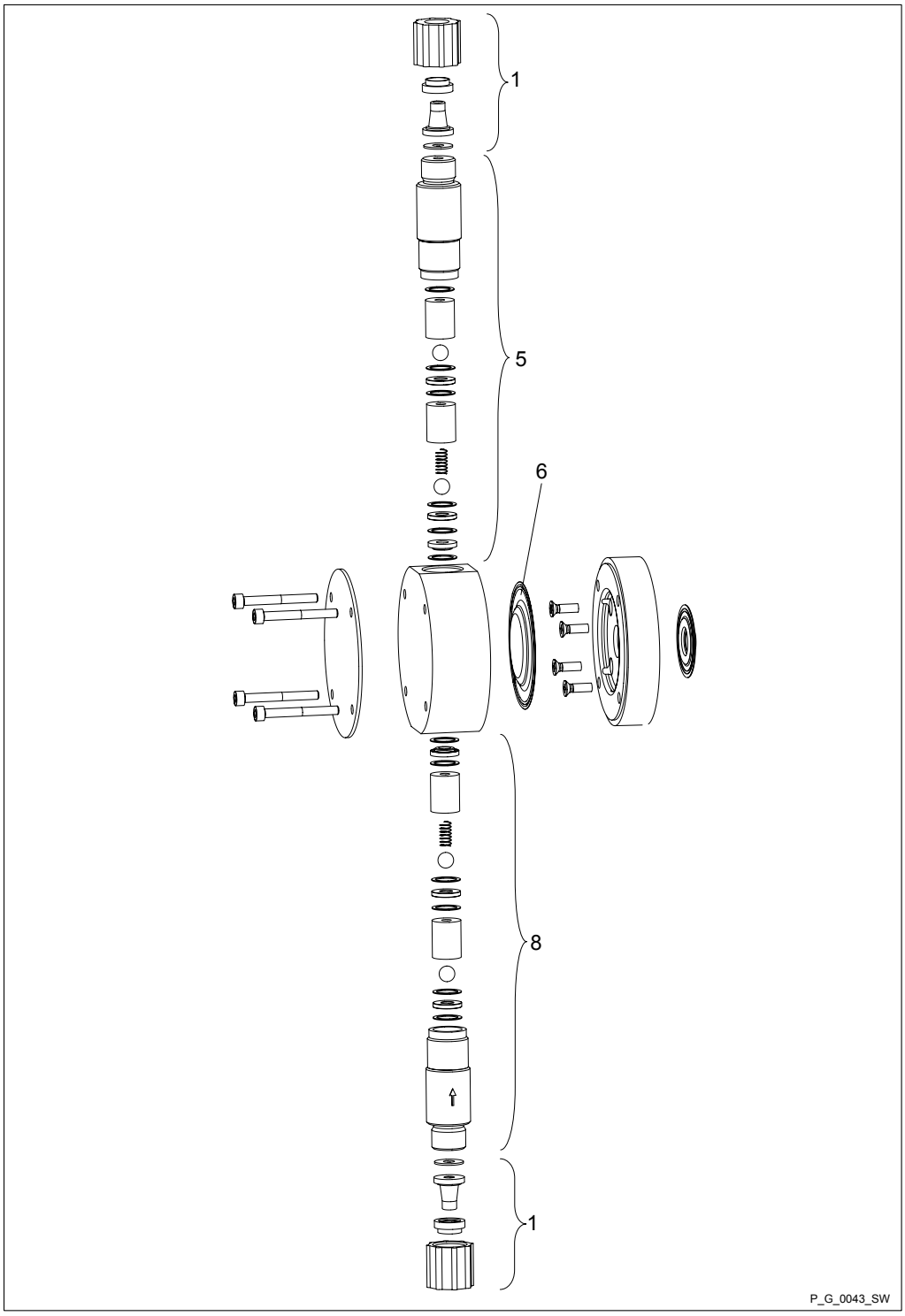


*Fig. 52*

Spare parts kit for liquid end gamma/ X 0245 TTT0

| Pos. | Description |
|---|---|
| 1 | Connector kit |
| 5 | Discharge valve |
| 6 | Diaphragm |
| 8 | Suction valve |

Liquid end gamma/ X 0245

| | TTT0 |
|---|---|
| Liquid end | 1051021 |
| Spare parts kit | 1051152 |
| Diaphragm | 1045443 |

Liquid end gamma/ X 1602 - 2504 SST0

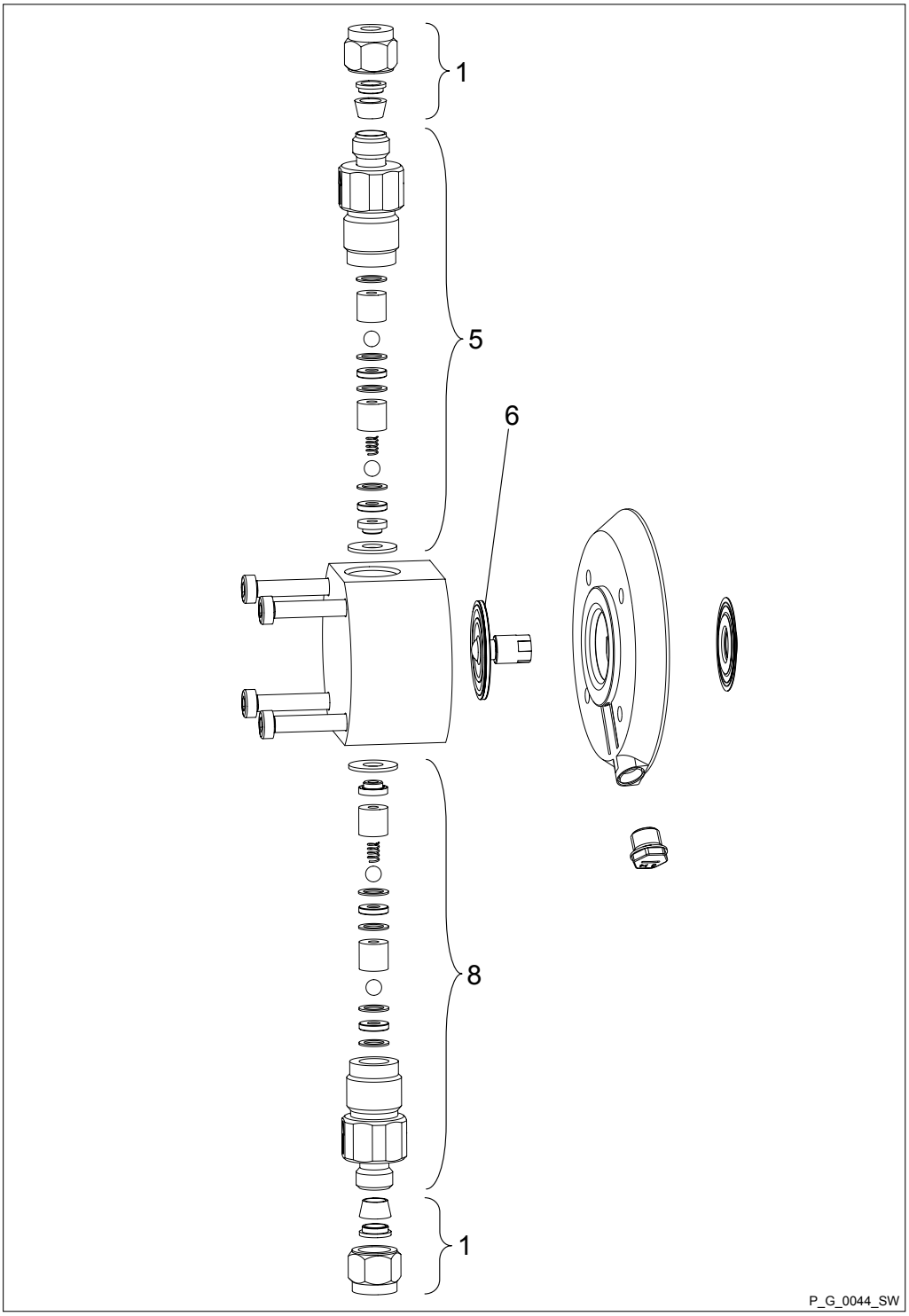


*Fig. 53*

Spare parts for liquid end gamma/ X 1602 - 2504 SST0

| Pos. | Description |
|---|---|
| 1 | Connector kit |
| 5 | Discharge valve |
| 6 | Diaphragm |
| 8 | Suction valve |

Liquid end gamma/ X 1602 (2002)

| | SST0 |
|---|---|
| Liquid end | 1051004 |
| Spare parts kit | 1001731 |
| Diaphragm | 1000246 |

Liquid end gamma/ X 1604 (2504)

| | SST0 |
|---|---|
| Liquid end | 1051005 |
| Spare parts kit | 1035331 |
| Diaphragm | 1034612 |

Liquid end gamma/ X 0708 (1009) - 0220 (0424) SST0

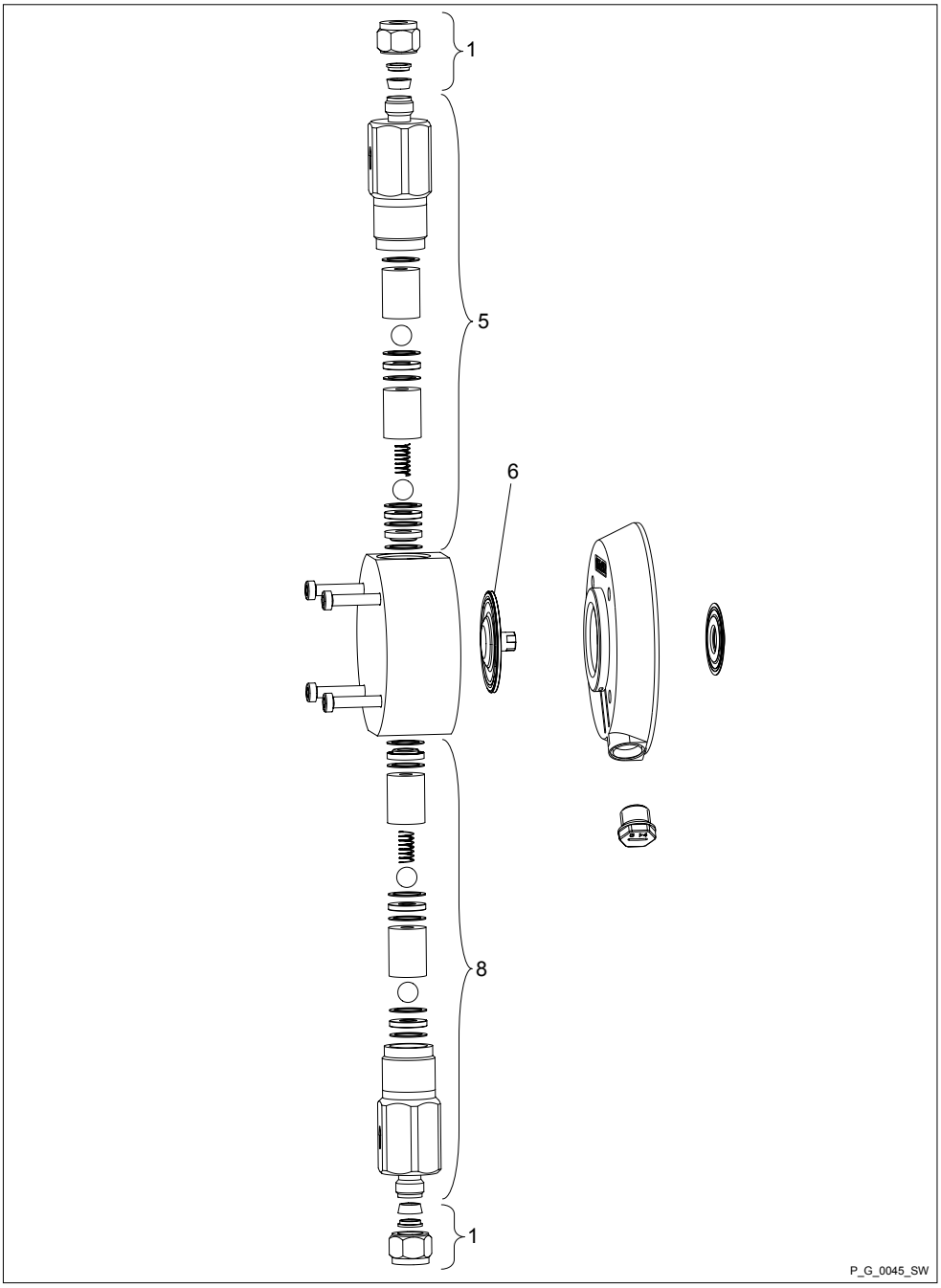


*Fig. 54*

Spare parts kit for liquid end gamma/ X 0708 (1009) - 0220 (0424) SST0

| Pos. | Description |
|---|---|
| 1 | Connector kit |
| 5 | Discharge valve |
| 6 | Diaphragm |
| 8 | Suction valve |

Liquid end gamma/ X 0708 (1009)

| | SST0 |
|---|---|
| Liquid end | 1051006 |
| Spare parts kit | 1001733 |
| Diaphragm | 1000248 |

Liquid end gamma/ X 0414 (0715)

| | SST0 |
|---|---|
| Liquid end | 1051007 |
| Spare parts kit | 1001734 |
| Diaphragm | 1000249 |

Liquid end gamma/ X 0220 (0424)

| | SST0 |
|---|---|
| Liquid end | 1051008 |
| Spare parts kit | 1051139 |
| Diaphragm | 1045456 |

Liquid end gamma/ X 0245 SST0

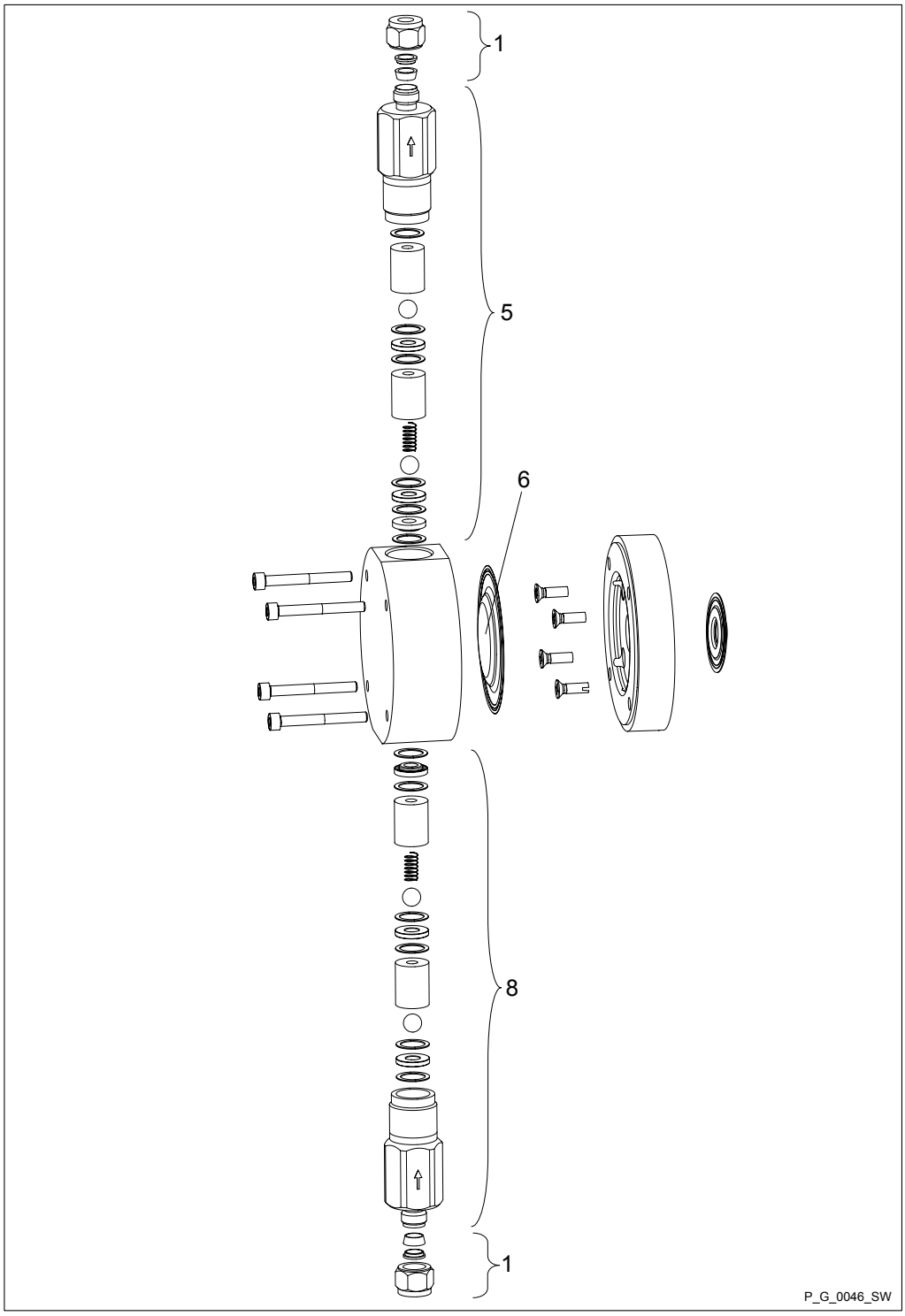


*Fig. 55*

Spare parts kit for liquid end gamma/ X 0245 SST0

| Pos. | Description |
|---|---|
| 1 | Connector kit |
| 5 | Discharge valve |
| 6 | Diaphragm |
| 8 | Suction valve |

Liquid end gamma/ X 0245

| | SST0 |
|---|---|
| Liquid end | 1051009 |
| Spare parts kit | 1051140 |
| Diaphragm | 1045443 |

Liquid end gamma/ X 1602 -2504 SER,
self-bleeding without bypass, NPT7

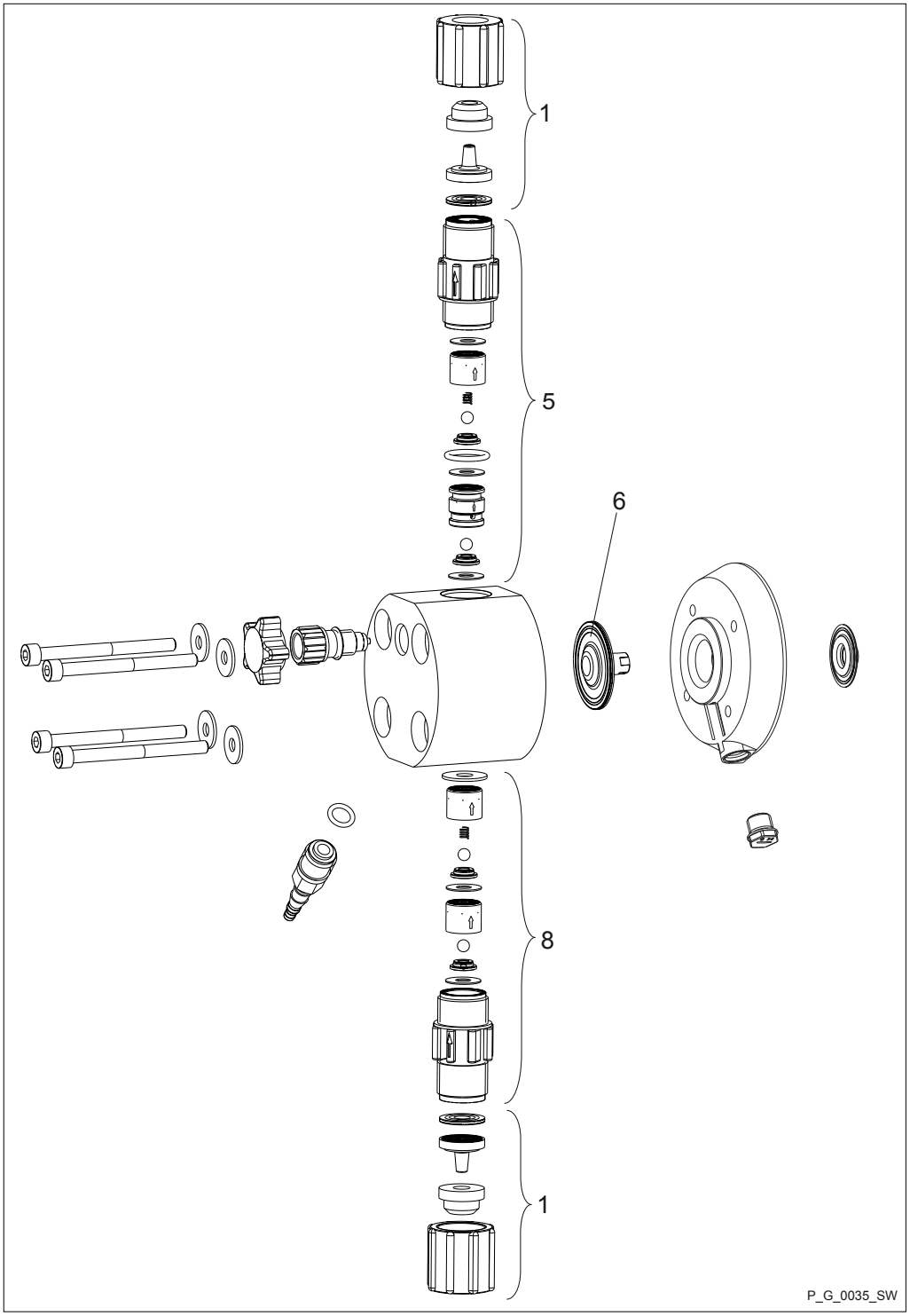


*Fig. 56*

Spare parts for liquid end gamma/ X 1602 - 2504 SER, self-bleeding without bypass, NPT7

| Pos. | Description |
|---|---|
| 1 | Connector kit |
| 5 | Discharge valve |
| 6 | Diaphragm |
| 8 | Suction valve |

Liquid end gamma/ X 1602

| | NPT7 |
|---|---|
| Liquid end SER, self-bleeding without bypass | 1051092 |
| Spare parts kit | 1047830 |
| Diaphragm | 1000246 |

Liquid end gamma/ X 1604

| | NPT7 |
|---|---|
| Liquid end SER, self-bleeding without bypass | 1051093 |
| Spare parts kit | 1047858 |
| Diaphragm | 1034612 |

**Liquid end gamma/ X 0708 (1009) - 0220 (0424) SER, self-bleeding without bypass, NPT7**

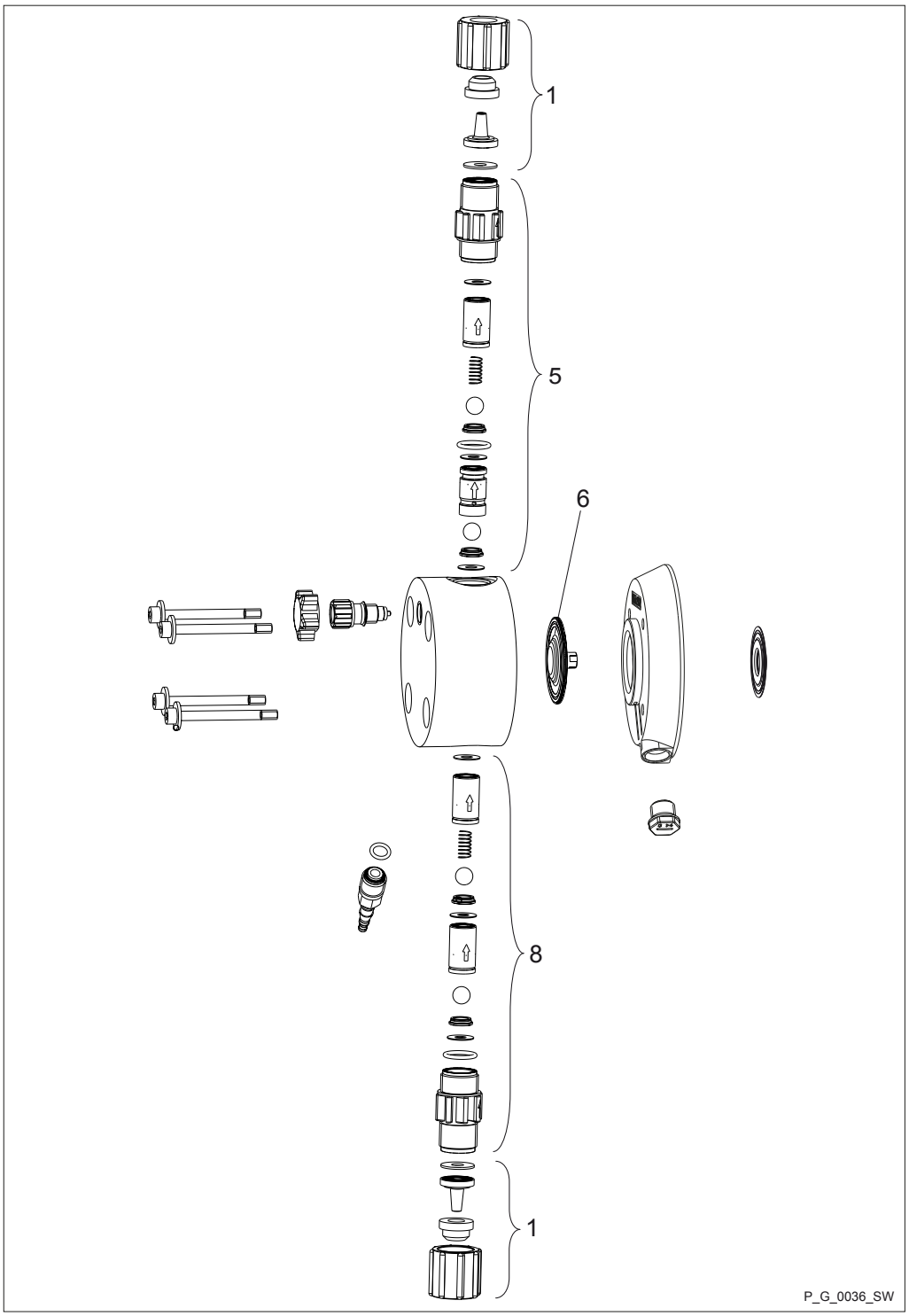


*Fig. 57*

Spare parts for liquid end gamma/ X 0708 (1009) - 0220 (0424) SER, self-bleeding without bypass, NPT7

| Pos. | Description |
|---|---|
| 1 | Connector kit |
| 5 | Discharge valve |
| 6 | Diaphragm |
| 8 | Suction valve |

Liquid end gamma/ X 0708 (1009)

| | NPT7 |
|---|---|
| Liquid end SER, self-bleeding without bypass | 1051094 |
| Spare parts kit | 1047832 |
| Diaphragm | 1000248 |

Liquid end gamma/ X 0414 (0715)

| | NPT7 |
|---|---|
| Liquid end SER, self-bleeding without bypass | 1051095 |
| Spare parts kit | 1047833 |
| Diaphragm | 1000249 |

Liquid end gamma/ X 0220 (0424)

| | NPT7 |
|---|---|
| Liquid end SER, self-bleeding without bypass | 1051098 |
| Spare parts kit | 1047837 |
| Diaphragm | 1045456 |

Liquid end gamma/ X 1602 - 1604 SER,
self-bleeding without bypass, PVT7

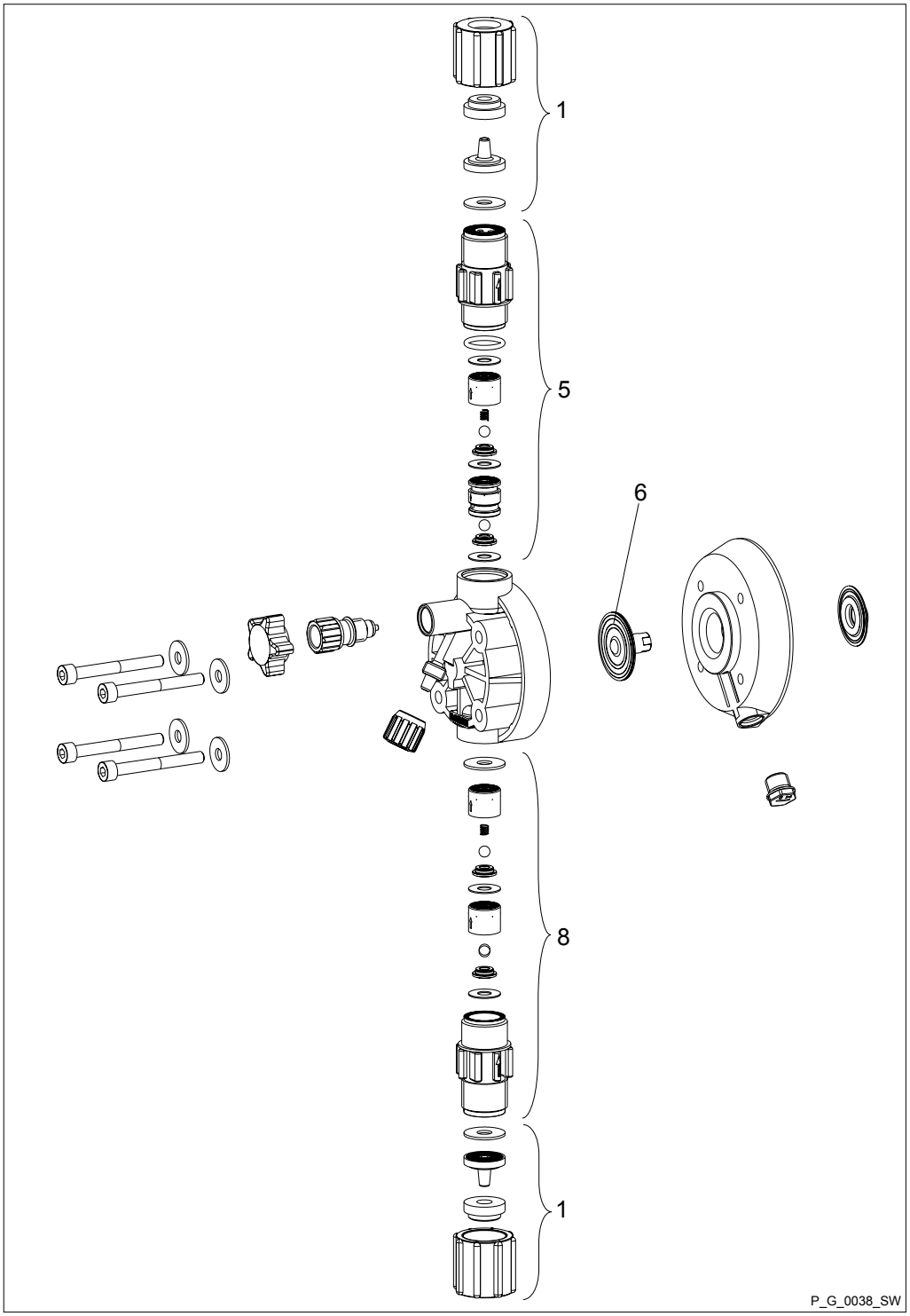


*Fig. 58*

Spare parts for liquid end gamma/ X 1602 - 1604 SER, self-bleeding without bypass, PVT7

| Pos. | Description |
|---|---|
| 1 | Connector kit |
| 5 | Discharge valve |
| 6 | Diaphragm |
| 8 | Suction valve |

Liquid end gamma/ X 1602

| | PVT7 |
|---|---|
| Liquid end SER, self-bleeding without bypass | 1051099 |
| Spare parts kit | 1047830 |
| Diaphragm | 1000246 |

Liquid end gamma/ X 1604

| | PVT7 |
|---|---|
| Liquid end SER, self-bleeding without bypass, | 1051100 |
| Spare parts kit | 1047858 |
| Diaphragm | 1034612 |

**Liquid end gamma/ X 0708 (1009) - 0220 (0424) SER, self-bleeding without bypass, PVT7**

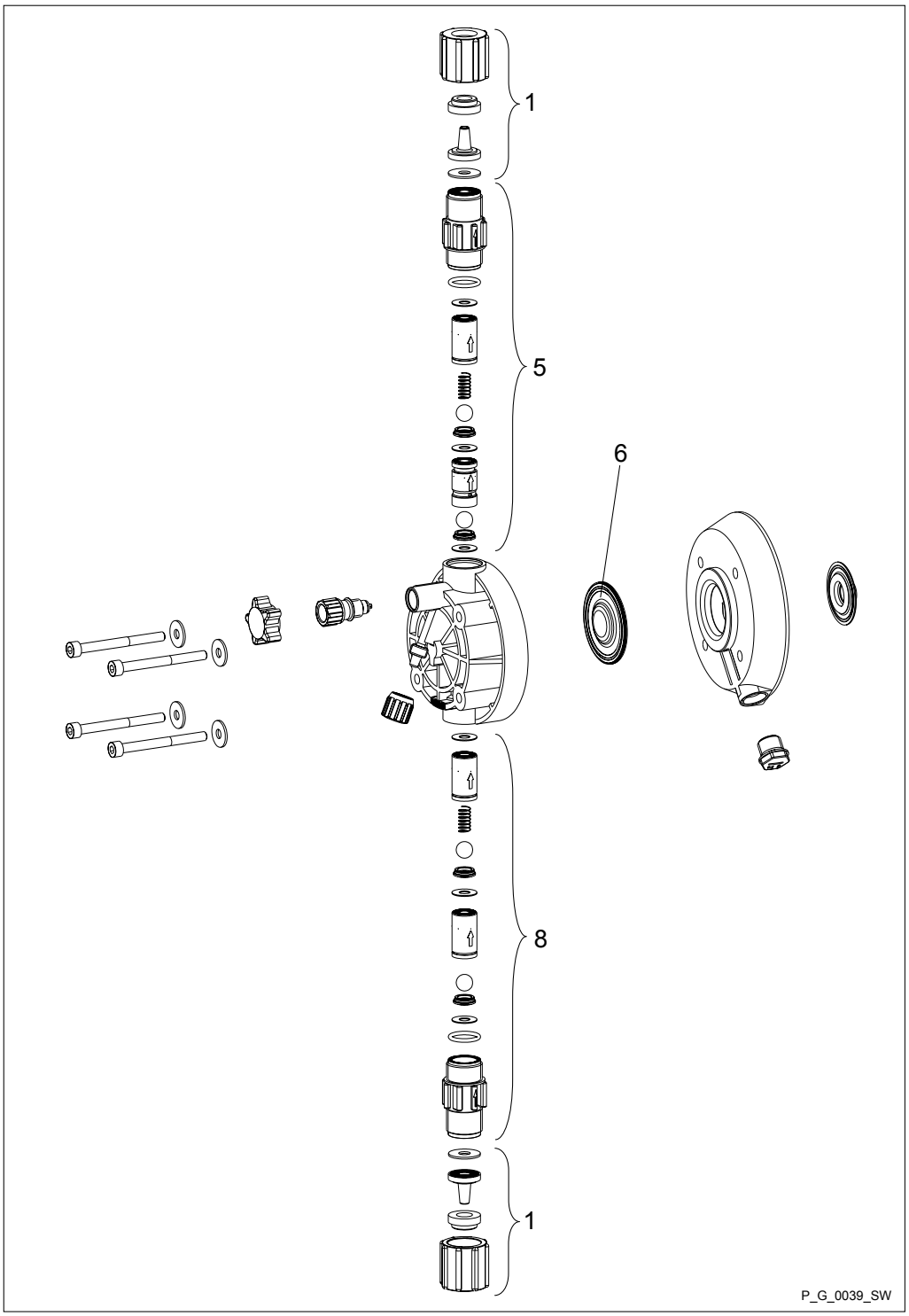


*Fig. 59*

Spare parts for liquid end gamma/ X 0708 (1009) - 0220 (0424) SER, self-bleeding without bypass, PVT7

| Pos. | Description |
|---|---|
| 1 | Connector kit |
| 5 | Discharge valve |
| 6 | Diaphragm |
| 8 | Suction valve |

Liquid end gamma/ X 0708 (1009)

| | PVT7 |
|---|---|
| Liquid end SER, self-bleeding without bypass | 1051101 |
| Spare parts kit | 1047832 |
| Diaphragm | 1000248 |

Liquid end gamma/ X 0414 (0715)

| | PVT7 |
|---|---|
| Liquid end SER, self-bleeding without bypass | 1051103 |
| Spare parts kit | 1047833 |
| Diaphragm | 1000249 |

Liquid end gamma/ X 0220 (0424)

| | PVT7 |
|---|---|
| Liquid end SER, self-bleeding without bypass | 1051104 |
| Spare parts kit | 1047837 |
| Diaphragm | 1045456 |

Liquid end gamma/ X 1602 - 1604 PP_9
and NP_9

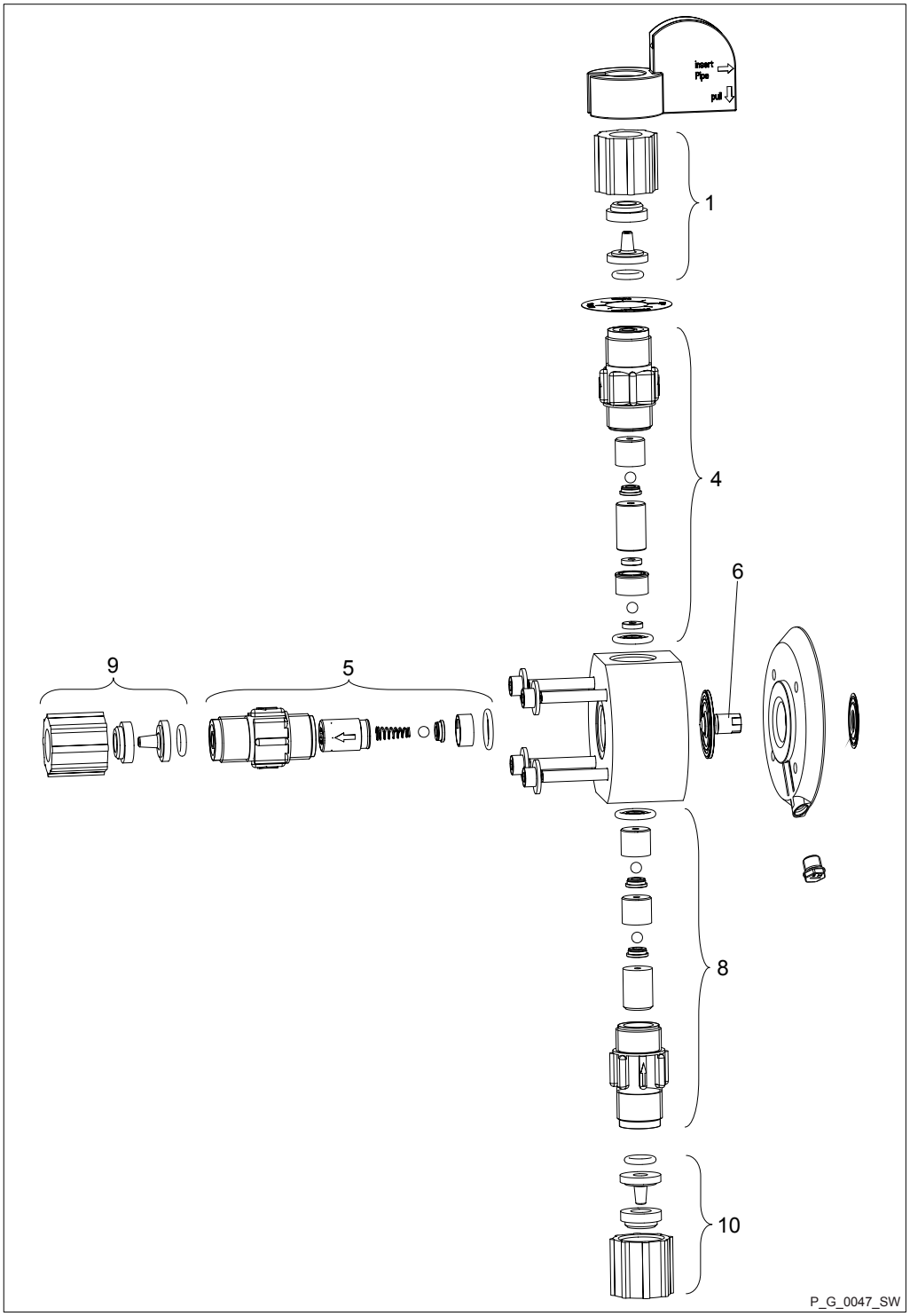


*Fig. 60*

| Pos. | Part |
|---|---|
| 1, 9, 10 | Connector kit |
| 4 | Bleed valve |
| 5 | Discharge valve |
| 6 | Diaphragm |
| 8 | Suction valve |

Liquid ends

| Type | Order No. |
|---|---|
| PPE_9 | - |
| 1602 | 1050937 |
| 1604 | 1050938 |
| PPB_9 | - |
| 1602 | 1050926 |
| 1604 | 1050927 |

Liquid ends

| Type | Order No. |
|---|---|
| NPE_9 | - |
| 1602 | 1050977 |
| 1604 | 1050978 |
| NPB_9 | - |
| 1602 | 1050960 |
| 1604 | 1050961 |

| Spare parts kits for type: | Material version | Order No. |
|---|---|---|
| 1602 with spring | PPE | 1001757 |
| 1604 with spring | PPE | 1035335 |
| 1602 with spring | PPB | 1001763 |
| 1604 with spring | PPB | 1035336 |
| 1602 with spring | NPE | 1001661 |
| 1604 with spring | NPE | 1035333 |
| 1602 with spring | NPB | 1001667 |
| 1604 with spring | NPB | 1035334 |

| Diaphragm for type: | Order No. |
|---|---|
| 1602 | 1000246 |
| 1604 | 1034612 |

Liquid end gamma/ X 0708 (1008) - 0220 (0420) PP_9 and NP_9

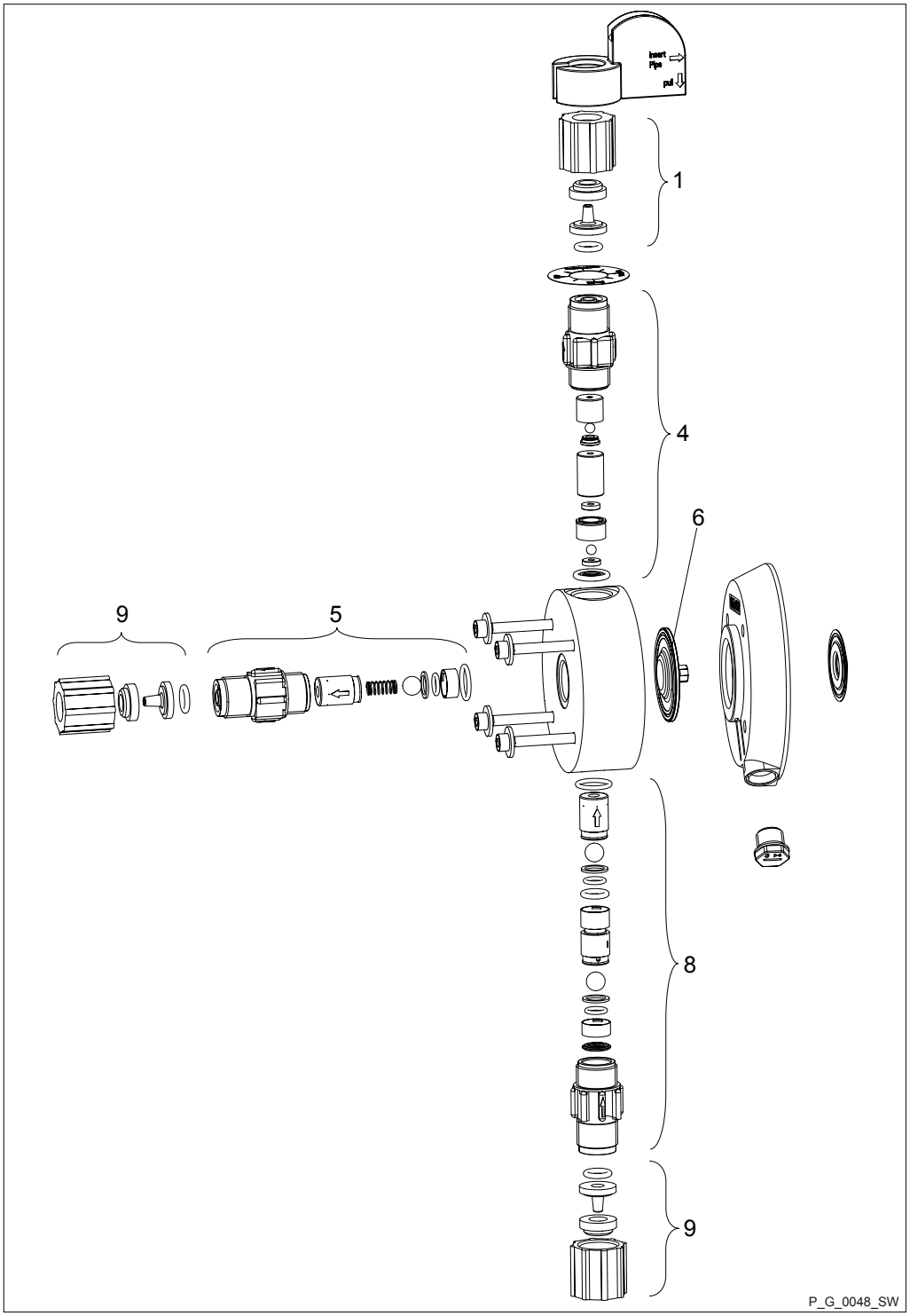


*Fig. 61*

| Pos. | Part |
|---|---|
| 1, 9, 10 | Connector kit |
| 4 | Bleed valve |
| 5 | Discharge valve |
| 6 | Diaphragm |
| 8 | Suction valve |

Liquid ends

| Type | Order No. |
|---|---|
| PPE9 | - |
| 0708 / 1009 | 1050939 |
| 0414 / 0715 | 1050940 |
| 0220 / 0424 | 1050941 |
| PPB9 | - |
| 0708 / 1009 | 1050928 |
| 0414 / 0715 | 1050929 |
| 0220 / 0424 | 1050930 |

Liquid ends

| Type | Order No. |
|---|---|
| NPE9 | - |
| 0708 / 1009 | 1050979 |
| 0414 / 0715 | 1050980 |
| 0220 / 0424 | 1050981 |
| NPB9 | - |
| 0708 / 1009 | 1050962 |
| 0414 / 0715 | 1050963 |
| 0220 / 0424 | 1050964 |

| Spare parts kits for type: | Material version | Order No. |
|---|---|---|
| 0708 (1008) | PPE | 1001759 |
| 0413 (0713) | PPE | 1001760 |
| 0220 (0420) | PPE | 1051102 |
| 0708 (1008) | PPB | 1001765 |
| 0413 (0713) | PPB | 1001766 |
| 0220 (0420) | PPB | 1051091 |
| 0708 (1008) | NPE | 1001663 |
| 0413 (0713) | NPE | 1001664 |
| 0220 (0420) | NPE | 1051124 |
| 0708 (1008) | NPB | 1001669 |
| 0413 (0713) | NPB | 1001670 |
| 0220 (0420) | NPB | 1051113 |

| Diaphragm for type: | Order No. |
|---|---|
| 0708 | 1000248 |
| 0413 | 1000249 |
| 0220 | 1045456 |

## 18.2 Ordering information

**Retrofit kits**

| Retrofit kit | Order No. |
|---|---|
| Fault indicating relay: | 1050643 |
| Fault indicating/pacing relay: | 1050654 |
| Current output: | 1050655 |
| | |
| Bleed valve 4-p. 24 V PVF: | 1061480 |
| Retrofit kit for bleed valve 3-p. 230 V PVF: | 1061481 |

**Further sources of information**

Further information on spare parts, accessories and options can be found in:

- the exploded drawings
- the identity code
- under www.prominent.com
- the ProMinent product catalogue

# 19 Dimensional Drawings

- *Compare the dimensions on the dimensional drawing with those of the pump and mounting foot.*
- *All dimensions are in mm.*

**Dimensional drawing of gamma/ X mounting foot**

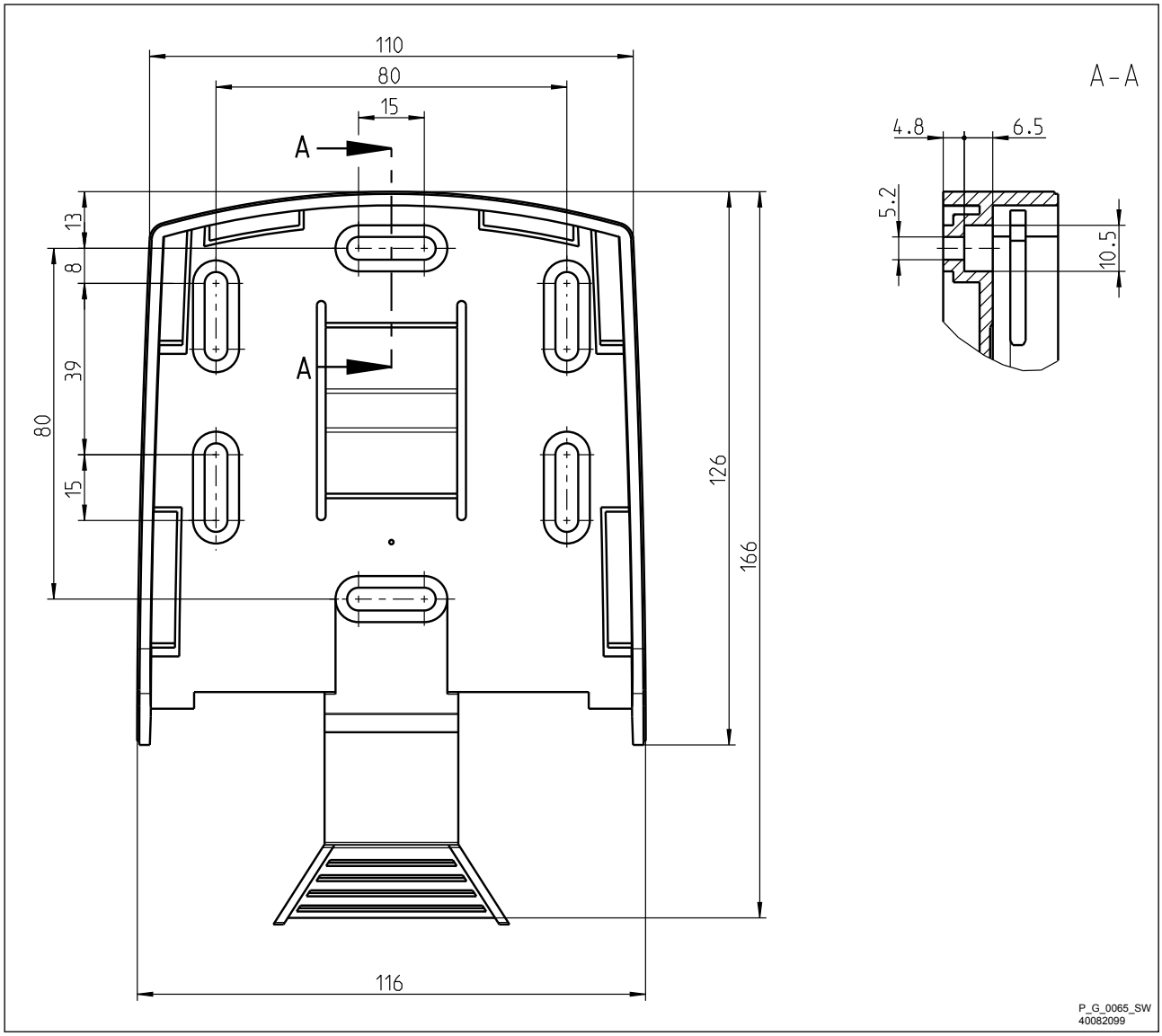


*Fig. 62*

Dimensional drawing gamma/ X, material versions PP_2

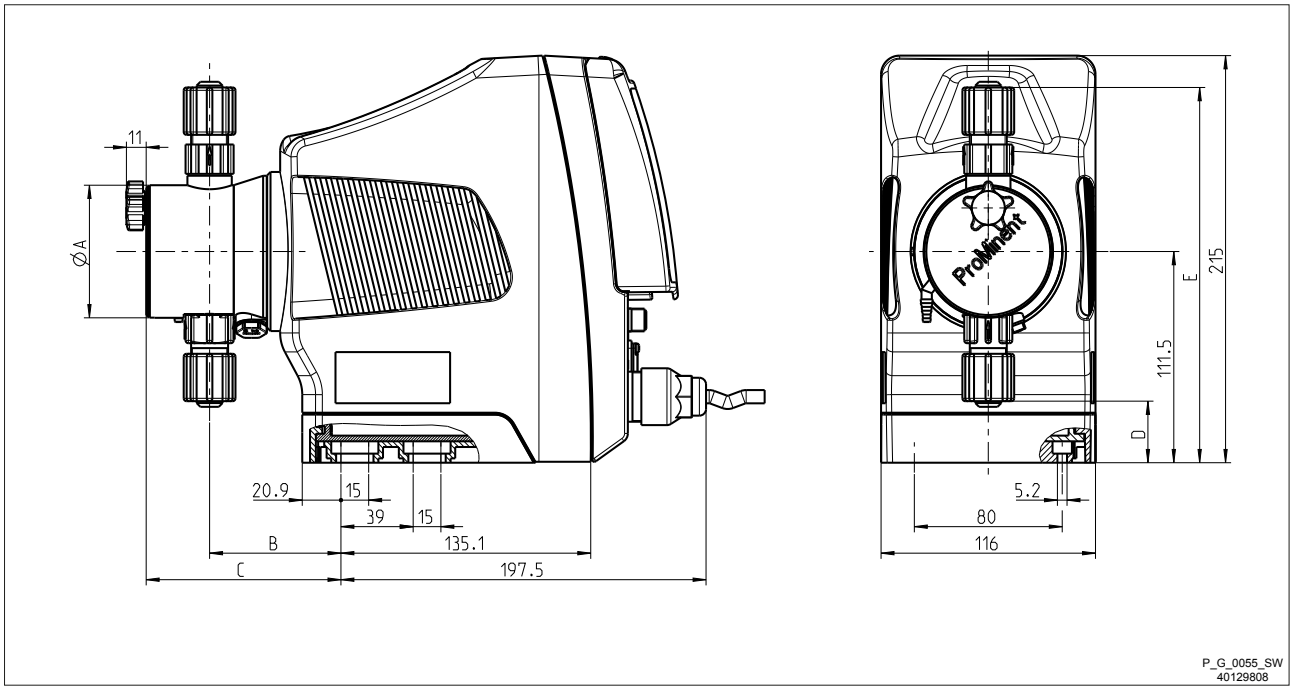


*Fig. 63*

| | gamma/ X M70 | | | | | gamma/ X M85 | | | |
|---|---|---|---|---|---|---|---|---|---|
| | 1602 | 1604 | 0708 | 0414 | 0220 | 1009 | 0715 | 0424 | 0245 |
| ØA | 70 | 70 | 90 | 90 | 90 | 90 | 90 | 90 | 110 |
| B | 71 | 71 | 74 | 74 | 76 | 74 | 74 | 76 | 76 |
| C (with bleed valve) | 106 | 106 | 108 | 107 | 110 | 108 | 107 | 110 | - |
| C (without bleed valve) | - | - | - | - | - | - | - | - | 93 |
| D | 32 | 32 | 24 | 24 | 24 | 24 | 24 | 24 | 14 |
| E | 198 | 198 | 202 | 202 | 202 | 202 | 202 | 202 | 209 |

### Dimensional drawing gamma/ X, material versions NP_2

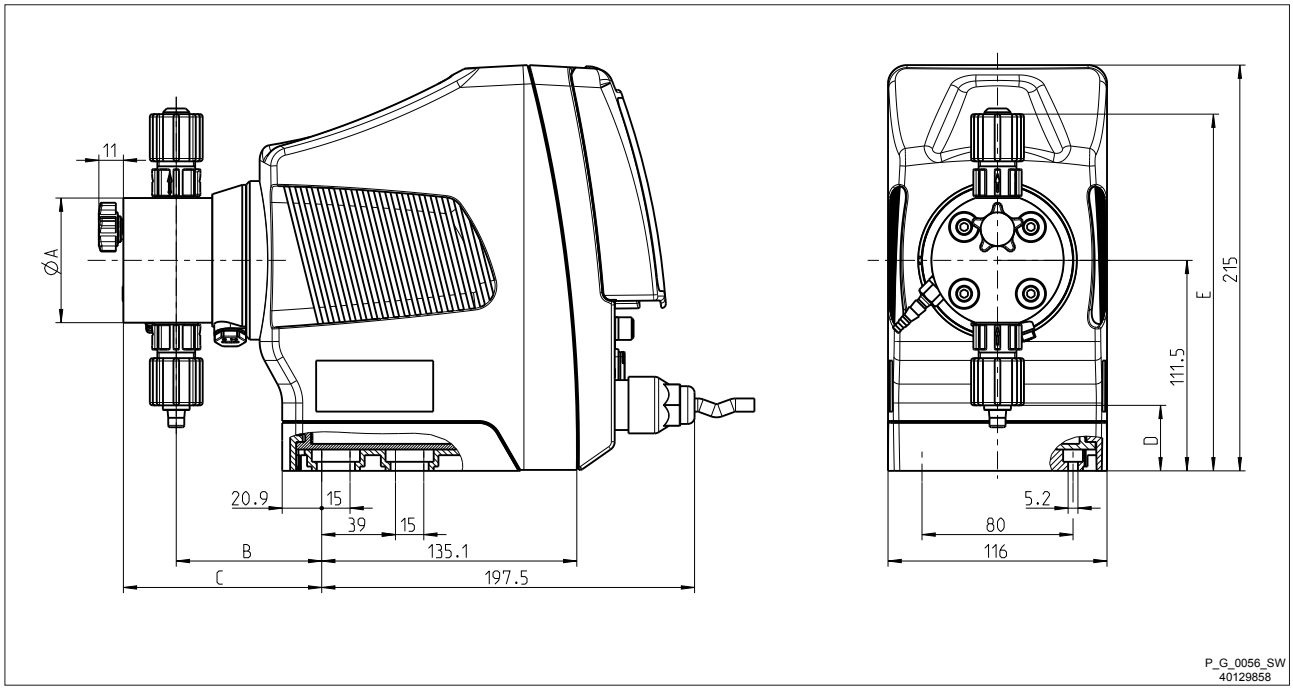


*Fig. 64*

| | gamma/ X M70 | | | | | gamma/ X M85 | | | |
|---|---|---|---|---|---|---|---|---|---|
| | 1602 | 1604 | 0708 | 0414 | 0220 | 1009 | 0715 | 0424 | 0245 |
| ØA | 70 | 70 | 90 | 90 | 90 | 90 | 90 | 90 | 110 |
| B | 77 | 77 | 74 | 76 | 76 | 74 | 76 | 76 | 76 |
| C (with bleed valve) | 105 | 105 | 102 | 104 | 104 | 102 | 104 | 104 | 105 |
| C (without bleed valve) | 92 | 92 | 91 | 91 | 91 | 91 | 91 | 91 | 91 |
| D | 33 | 33 | 23 | 23 | 23 | 23 | 23 | 23 | 14 |
| E | 191 | 191 | 200 | 200 | 200 | 200 | 200 | 200 | 210 |

Dimensional drawing gamma/ X, material version PVT2

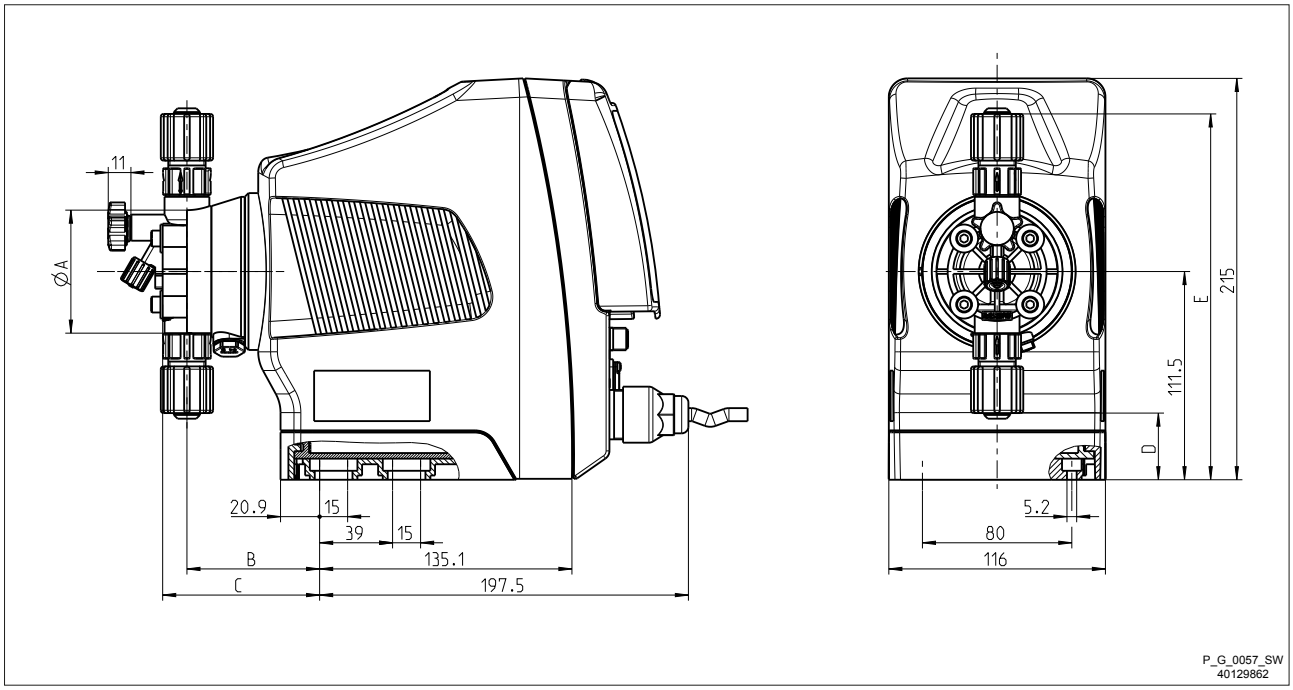


*Fig. 65*

| | gamma/ X M70 | | | | | gamma/ X M85 | | | |
|---|---|---|---|---|---|---|---|---|---|
| | 1602 | 1604 | 0708 | 0414 | 0220 | 1009 | 0715 | 0424 | 0245 |
| ØA | 70 | 70 | 90 | 90 | 90 | 90 | 90 | 90 | 110 |
| B | 71 | 71 | 75 | 73 | 79 | 75 | 73 | 79 | 76 |
| C (with bleed valve) | 84 | 84 | 92 | 90 | 90 | 92 | 90 | 90 | - |
| C (without bleed valve) | - | - | - | - | - | - | - | - | 93 |
| D | 36 | 36 | 25 | 25 | 25 | 25 | 25 | 25 | 14 |
| E | 196 | 196 | 203 | 203 | 203 | 203 | 203 | 203 | 209 |

### Dimensional drawing gamma/ X, material version PVT4

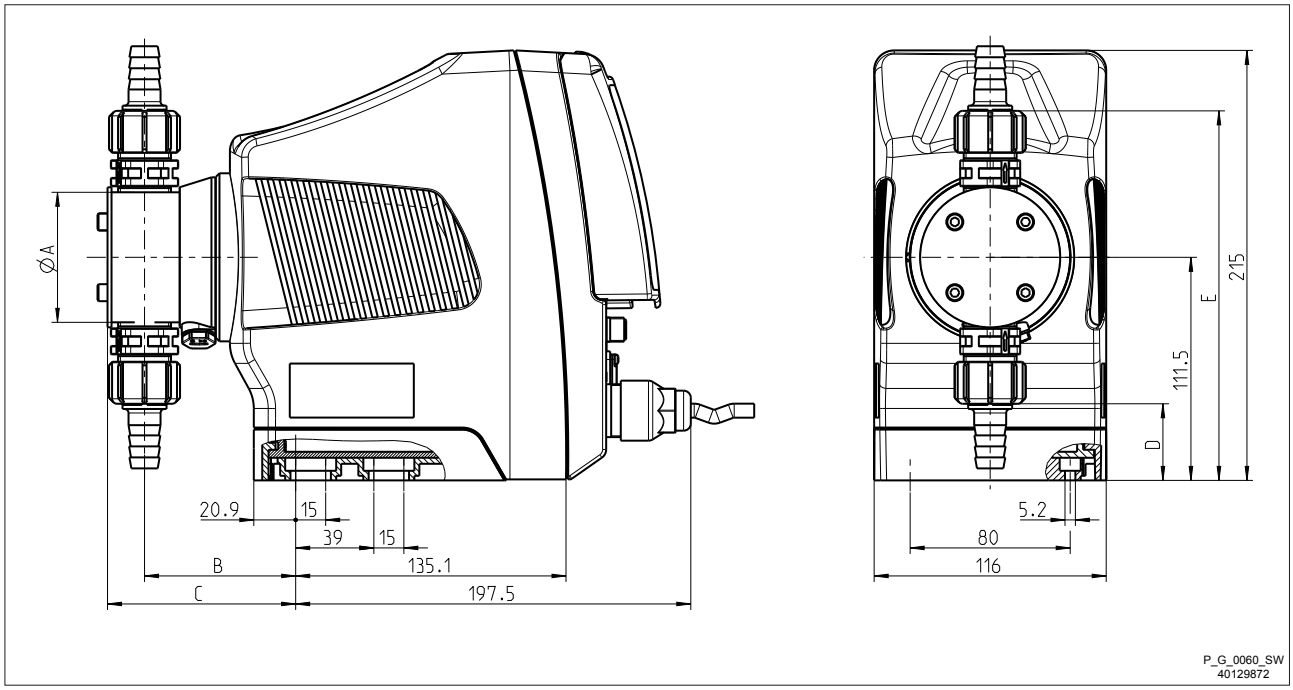


*Fig. 66*

| | gamma/ X M70 | | | | gamma/ X M85 | | |
|---|---|---|---|---|---|---|---|
| | 1604 | 0708 | 0414 | 0220 | 1009 | 0715 | 0424 |
| ØA | 70 | 80 | 80 | 85 | 80 | 80 | 85 |
| B | 76 | 78 | 78 | 79 | 78 | 78 | 79 |
| C | 94 | 96 | 96 | 97 | 96 | 96 | 97 |
| D | 38 | 33 | 33 | 30 | 33 | 33 | 30 |
| E | 185 | 190 | 190 | 193 | 190 | 190 | 193 |

Dimensional drawing gamma/ X, material version TTT0

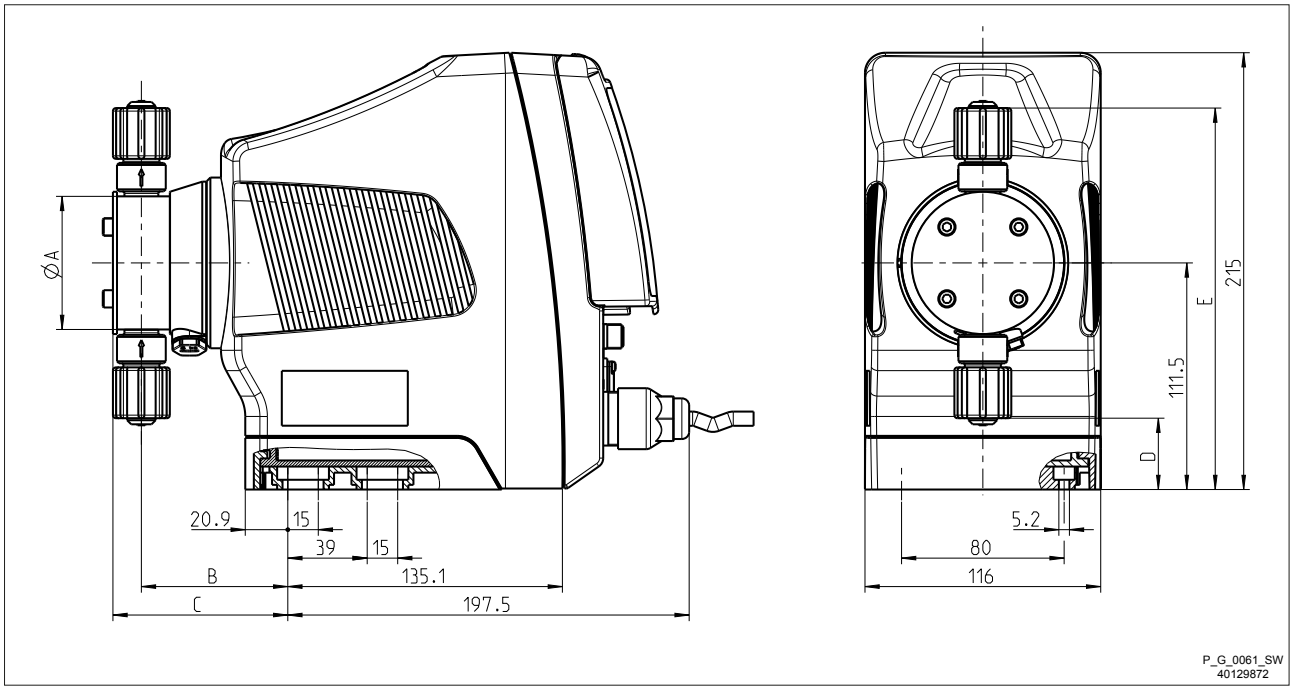


*Fig. 67*

| | gamma/ X M70 | | | | | gamma/ X M85 | | | |
|---|---|---|---|---|---|---|---|---|---|
| | 1602 | 1604 | 0708 | 0414 | 0220 | 1009 | 0715 | 0424 | 0245 |
| ØA | 70 | 70 | 85 | 85 | 85 | 85 | 85 | 85 | 100 |
| B | 72 | 72 | 79 | 77 | 77 | 79 | 77 | 77 | 78 |
| C | 86 | 86 | 96 | 96 | 96 | 96 | 96 | 96 | 97 |
| D | 35 | 35 | 3 | 3 | 3 | 3 | 3 | 3 | -5 |
| E | 188 | 188 | 220 | 220 | 202 | 220 | 220 | 202 | 227 |

### Dimensional drawing gamma/ X, material version SST0

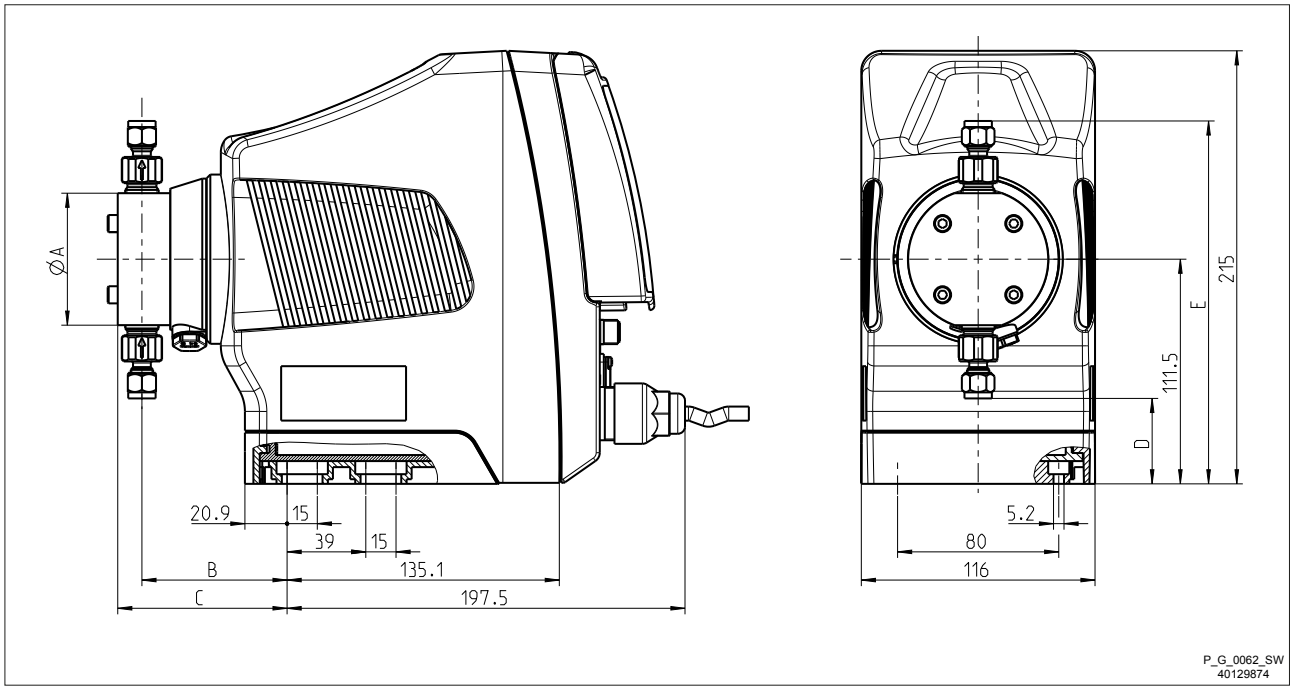


*Fig. 68*

| | gamma/ X M70 | | | | | gamma/ X M85 | | | |
|---|---|---|---|---|---|---|---|---|---|
| | 1602 | 1604 | 0708 | 0414 | 0220 | 1009 | 0715 | 0424 | 0245 |
| ØA | 70 | 70 | 85 | 85 | 85 | 85 | 85 | 85 | 100 |
| B | 72 | 72 | 79 | 77 | 77 | 79 | 77 | 77 | 78 |
| C | 84 | 84 | 94 | 94 | 94 | 94 | 94 | 94 | 95 |
| D | 42 | 42 | 11 | 11 | 11 | 11 | 11 | 11 | 4 |
| E | 180 | 180 | 211 | 211 | 211 | 211 | 211 | 211 | 219 |

Dimensional drawing gamma/ X, material version PPB9

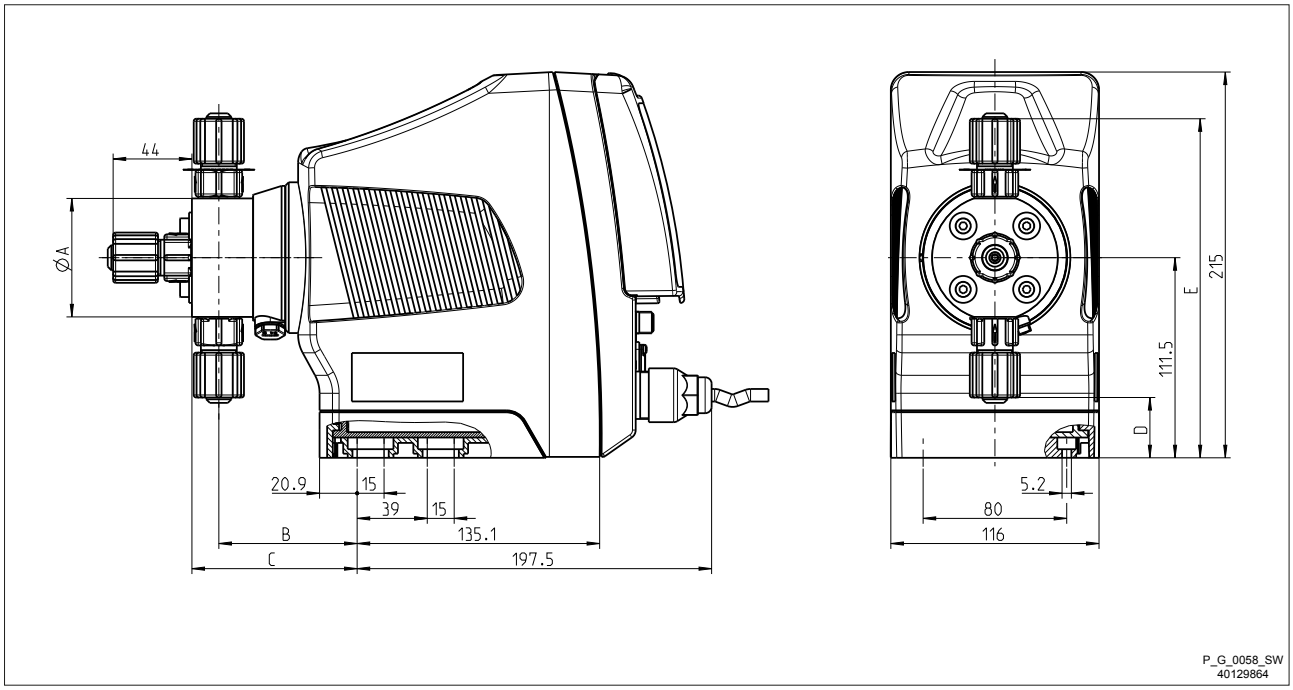


*Fig. 69*

| | gamma/ X M70 | | | | | gamma/ X M85 | | |
|---|---|---|---|---|---|---|---|---|
| | 1602 | 1604 | 0708 | 0414 | 0220 | 1009 | 0715 | 0424 |
| ØA | 70 | 70 | 90 | 90 | 90 | 90 | 90 | 90 |
| B | 77 | 77 | 74 | 76 | 76 | 74 | 76 | 76 |
| C | 92 | 92 | 89 | 91 | 91 | 89 | 91 | 91 |
| D | 33 | 33 | 24 | 24 | 24 | 24 | 24 | 24 |
| E | 189 | 189 | 199 | 199 | 199 | 199 | 199 | 199 |

### Dimensional drawing gamma/ X, material version NPB9

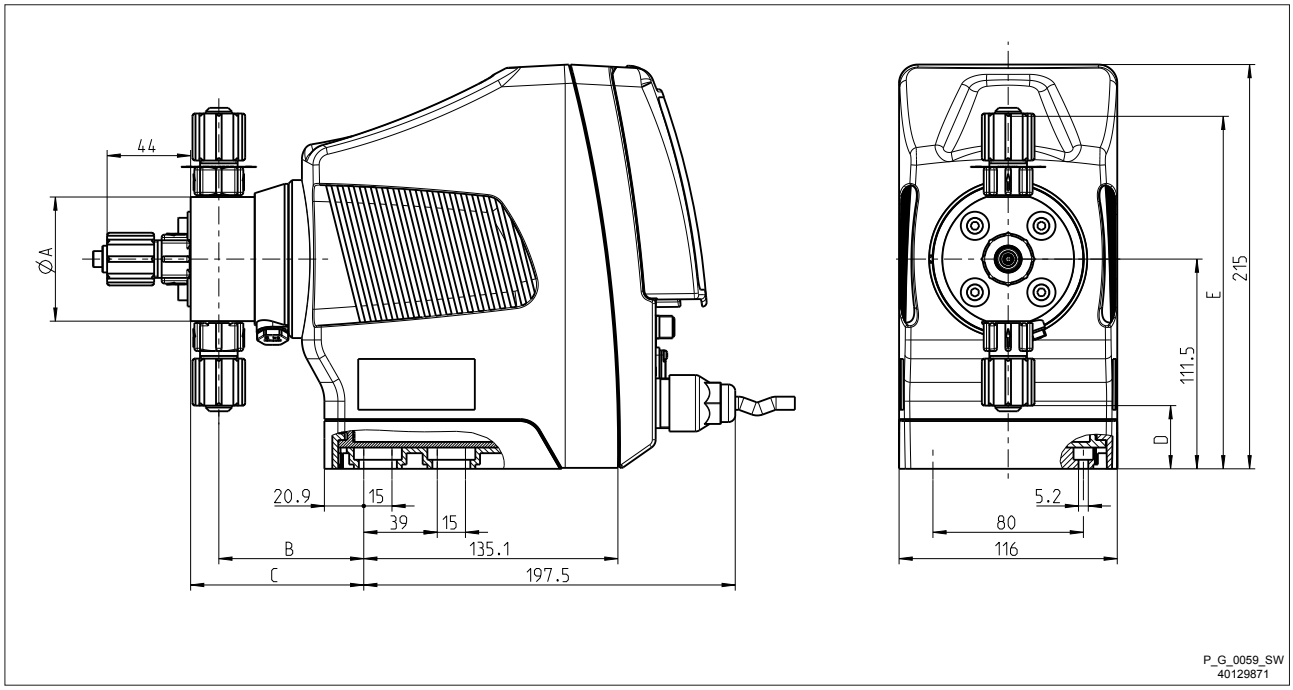


*Fig. 70*

| | gamma/ X M70 | | | | | gamma/ X M85 | | |
|---|---|---|---|---|---|---|---|---|
| | 1602 | 1604 | 0708 | 0414 | 0220 | 1009 | 0715 | 0424 |
| ØA | 70 | 70 | 90 | 90 | 90 | 90 | 90 | 90 |
| B | 77 | 77 | 76 | 76 | 76 | 76 | 76 | 76 |
| C | 92 | 92 | 91 | 91 | 91 | 91 | 91 | 91 |
| D | 33 | 33 | 24 | 24 | 24 | 24 | 24 | 24 |
| E | 189 | 189 | 199 | 199 | 199 | 199 | 199 | 199 |

# 20 Diagrams for Setting the Capacity

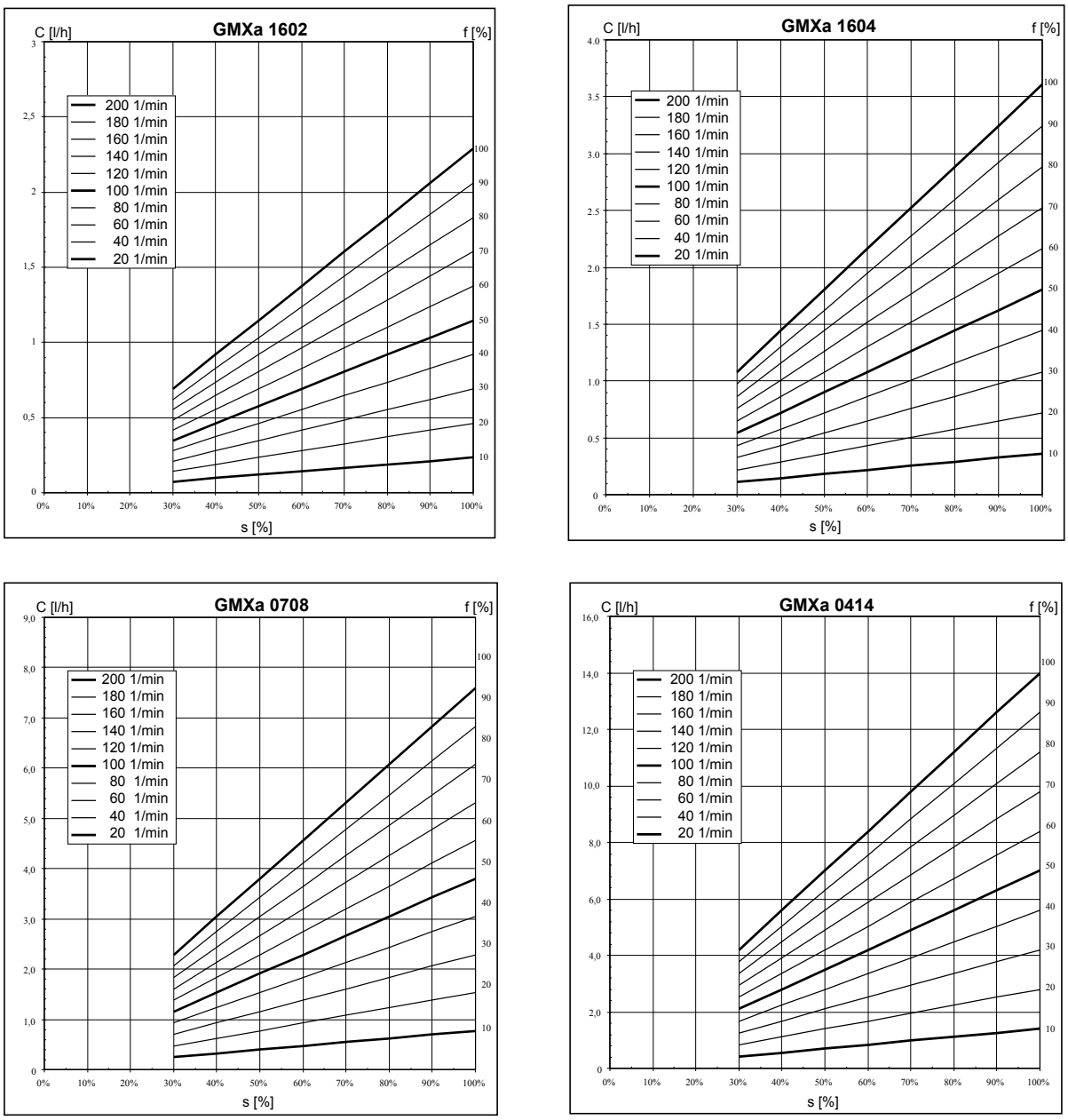


*Fig. 71: Capacity C at maximum back pressure depending on the stroke length s for different stroke rates f*

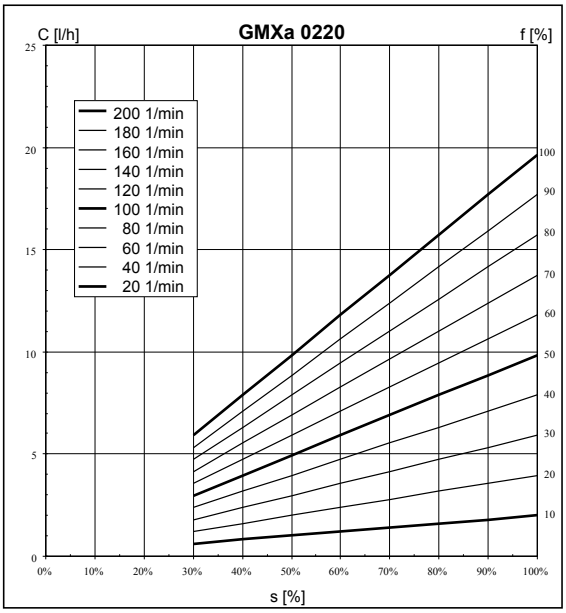


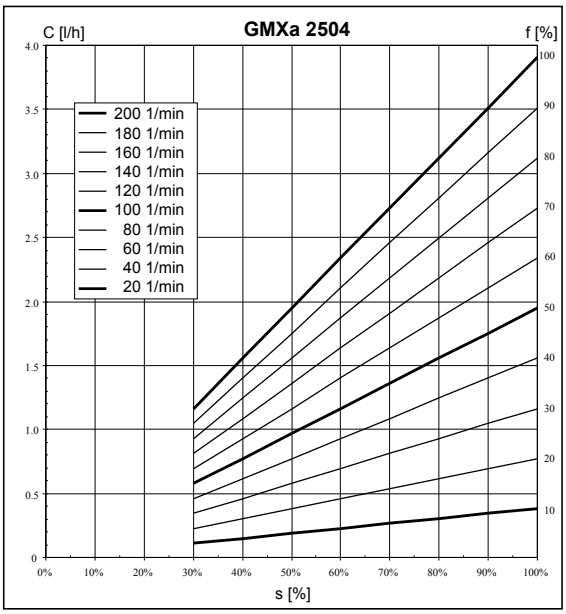


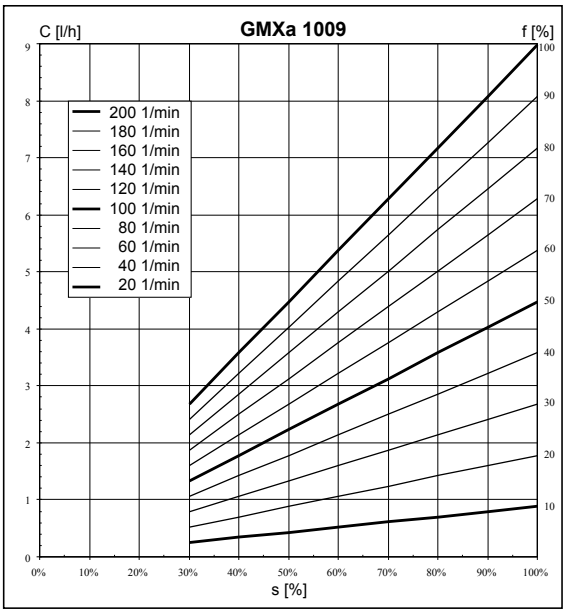


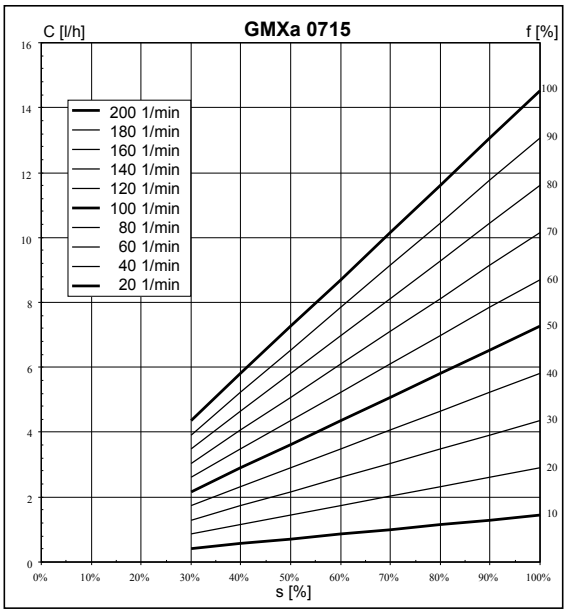


*Fig. 72: Capacity C at maximum back pressure depending on the stroke length s for different stroke rates f*

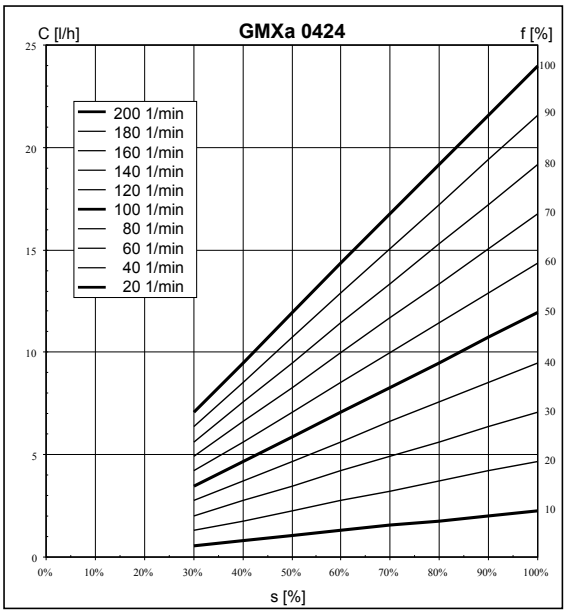


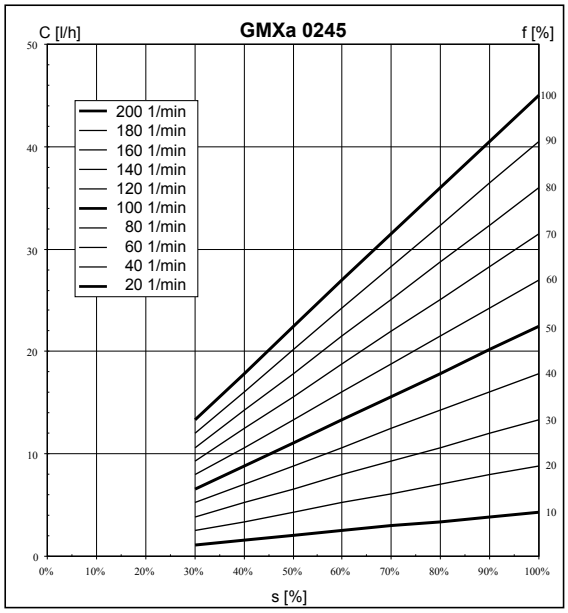


*Fig. 73: Capacity C at maximum back pressure depending on the stroke length s for different stroke rates f*

# 21 Declaration of Conformity for Machinery

**For mains voltage pumps:**

In accordance with DIRECTIVE 2006/42/EC OF THE EUROPEAN PARLIAMENT AND OF THE COUNCIL, Appendix I, BASIC HEALTH AND SAFETY REQUIREMENTS, section 1.7.4.2. C.

We,

- ProMinent GmbH
- Im Schuhmachergewann 5 - 11
- D - 69123 Heidelberg, Germany,

hereby declare that the product specified in the following, complies with the relevant basic health and safety requirements of the EC Directive, on the basis of its functional concept and design and in the version distributed by us.

Any modification to the product not approved by us will invalidate this declaration.

**Extract from the Declaration of Conformity**

| | |
|---|---|
| Designation of the product: | Metering pump, gamma/ X product range |
| Product type: | GMXa _ _ _ _ _ _ _ _ _ _ _ _ U _ _ _ Y _ 0<br>Y = 0, 3, 4, 5 |
| Serial number: | see nameplate on the device |
| Relevant EC directives: | Machinery Directive (2006/42/EC)<br>Compliance with the protection targets of the Low Voltage Directive according to Appendix I, No. 1.5.1 of the Machinery Directive<br>RoHS Directive (2011/65/EU)<br>EMC Directive (2014/30/EU) |
| Harmonised standards applied, in particular: | EN ISO 12100: 2010<br>EN 809:1998 + A1:2009 + AC:2010<br>EN 61010-1:2010<br>EN 50581:2012<br>EN 61000-6-2:2005 + AC:2005<br>EN 61000-6-3:2007 + A1:2011 +AC:2012 |
| Date: | 20/04/2016 |

You will find the EC Declaration of Conformity to download on our homepage.

# 22 Approvals

**Other approvals**

The pump has the following approvals apart from CE approval:

| Certification | Certificate no. |
|---|---|
| EAC | TC N RU D-DE.IA58.B.03108 |
| $_{C}$ MET $_{US}$ | - |
| NSF61 | - |

# 23 Operating/Set-up Overview of the gamma/ X

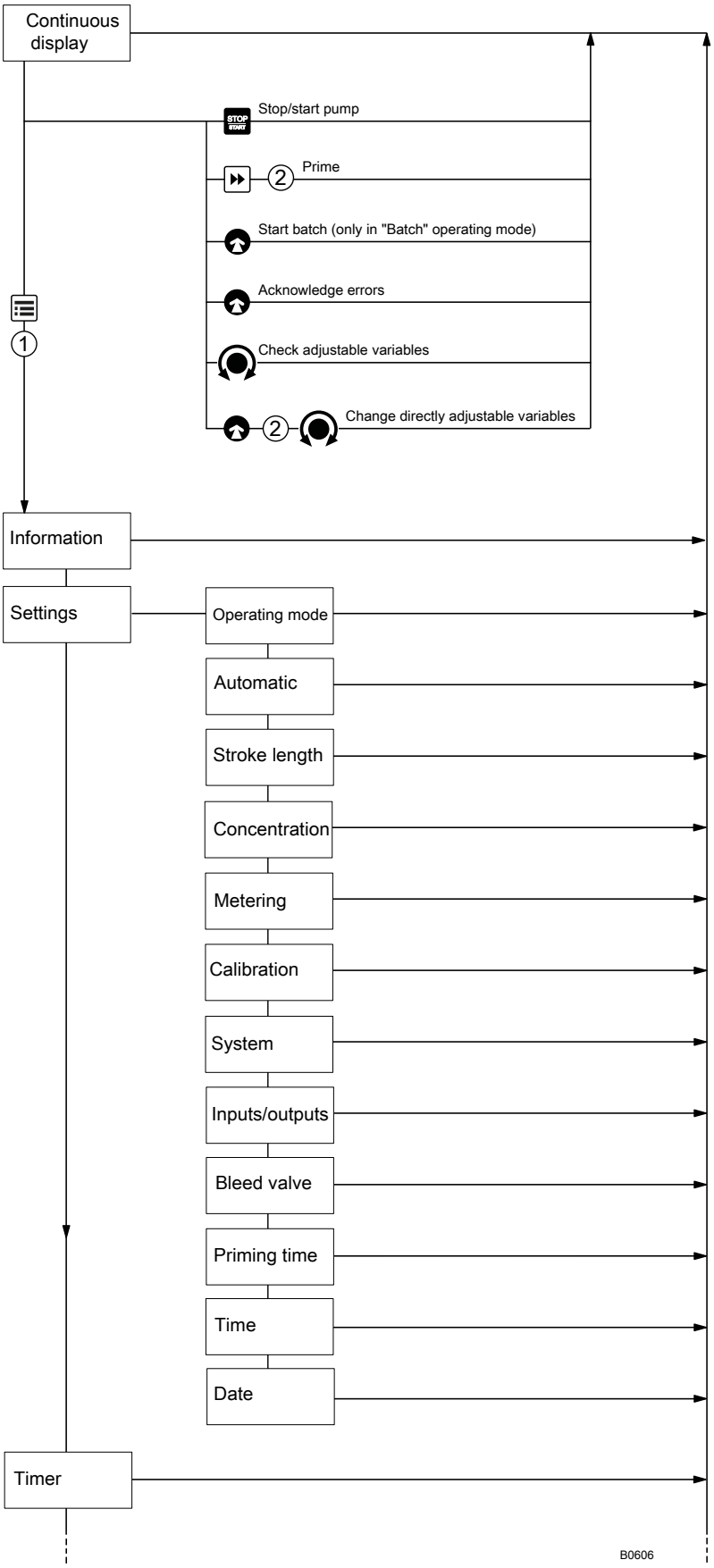

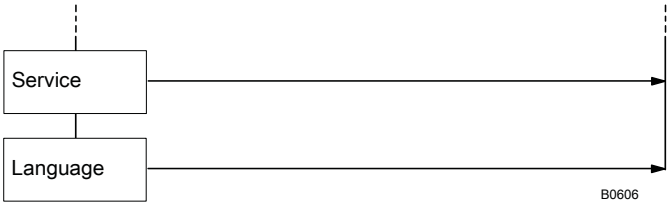
Service
Language
B0606

# 24 Operating Menu of gamma/ X, Entire Unit

| 1. Level | 2. | 3. | 4. | 5. | xth |
|---|---|---|---|---|---|
| Information | Versions | Hardware | | | |
| | | Software | | | |
| | | HMI version | | | |
| | Time | | | | |
| | Date | | | | |
| | Serial number | | | | |
| | Identity Code | | | | |
| | Max. capacity *1<br>Max. capacity *2 | | | | |
| | Switch-on counter | | | | |
| | Total operating time | | | | |
| | Total metering volume | | | | |
| | Total number of strokes | | | | |
| | Total metering volume | | | | |
| | Current stroke volume | | | | |
| | BT name | | | | |
| | BT device address | | | | |
| settings | Operating mode | Manual | | | |
| | | Contact | *Memory*<br>On<br>Off | Metering volume *1 | |
| | | | | Factor *2 | |
| | | Batch | *Memory*<br>On<br>Off | Metering volume *1 | |
| | | | | Factor *2 | ... |
| | | Analogue operating mode | 0..20 mA | | |
| | | | 4..20 mA | | |
| | | | Linear curve<br>Lower side band<br>Upper side band | Curve point 1 (I1,F1)<br>Error mess. < Imin<br>Error mess. > Imax | ... |
| | Automatic | On<br>Off | | | |
| | Stroke length *2 | 1 ... 100% | | | |

| 1. Level | 2. | 3. | 4. | 5. | xth |
|---|---|---|---|---|---|
| | Metering | Discharge stroke | optimum<br>fast<br>sine mode<br>continuous<br>DFMa | | |
| | | Suction stroke | normal<br>HV1<br>HV2<br>HV3 | | |
| | | Pressure stage | x bar | | |
| | | Monitoring | Air lock | Inactive<br>Warning<br>Fault | |
| | | | Message with over-pressure | Error+warning<br>Warning<br>Fault | |
| | | | Message with no pressure | Inactive<br>Warning<br>Fault<br>Error+warning | |
| | | | Cavitation | Inactive<br>Warning | |
| | Concentration | Concentration con-trol<br>active<br>inactive | Flow of main medium (for Manual) | Concentration of feed chemical | ... |
| | | | Contact gap (for Contact) | Concentration of feed chemical | ... |
| | | | Volume of main medium (for Batch) | Concentration of feed chemical | ... |
| | | | Max. flow of main medium (for Ana-logue) | Concentration of feed chemical | ... |
| | Calibration | Start calibration | Calibration ended | Calibration result | |
| | System | Bluetooth | active<br>inactive | | |
| | | Dosing head | No dosing head<br>...<br>0245 | | |
| | | Volume unit | Litres<br>Gallons | | |
| | | Pressure unit | bar<br>psi | | |
| | | Pressure adjust-ment | ... bar | | |

| 1. Level | 2. | 3. | 4. | 5. | xth |
|---|---|---|---|---|---|
| | Inputs/outputs | Auxiliary capacity *1<br>Auxiliary frequency *2 | ... | | |
| | | Relay 1 | Relay1 type | Timer<br>Fault<br>Warning<br>Warning + error<br>Pump active<br>Cycle quantity<br>Stroke rate<br>Metering / Batch | |
| | | | Relay 1 polarity | normally-open (NO)<br>normally-closed (NC) | |
| | | | Relay cycle quantity | 01.000 l | |
| | | Relay 2 | Relay type | Inactive<br>Fault<br>Warning<br>Warning + error<br>Pump active<br>Metering volume<br>Stroke rate<br>Metering / Batch<br>Bleed valve<br>External | |
| | | | Polarity | normally-open (NO)<br>normally-closed (NC) | |
| | | Analogue output | 0..20 mA<br>4..20 mA | Strokes / hour<br>Litre / hour at 20mA | |
| | | Flow control | Flow Control | Tolerance / strokes | ... |
| | | | | Activation | ... |
| | | | | if auxiliary | ... |
| | | Diaphragm rupture | Inactive<br>Warning<br>Fault | | |
| | | Pause Input | normally-open (NO)<br>normally-closed (NC) | | |
| | | Level warning | normally-open (NO)<br>normally-closed (NC) | | |

| 1. Level | 2. | 3. | 4. | 5. | xth |
|---|---|---|---|---|---|
| | | Level error | normally-open (NO)<br>normally-closed (NC) | | |
| | Bleed valve | Off | | | |
| | | Periodic | Bleed cycle | Bleed metering time | ... |
| | | Air lock | Bleed metering time | | |
| | | both | Bleed cycle | Bleed metering time | ... |
| | Priming time | 0 ... 60 s | | | |
| | Set time | Time | Setting | hh.mm.ss | |
| | | Auto. summer time | Yes<br>No | | |
| | | Summer time begins in | February<br>March<br>April | | |
| | | Sunday the | 1st, 2nd, 3rd, 4th, 5th | | |
| | | Summer time ends in | August<br>September<br>October<br>November | | |
| | | Sunday the | 1st, 2nd, 3rd, 4th, 5th | | |
| | | Town | Northern Hemi-sphere<br>Southern Hemi-sphere | | |
| | Date | dd.mm.yyyy | | | |
| Timer | Activation | Active<br>Inactive | | | |
| | Setting the timer | New<br>Display<br>Change<br>Clear | Command 01<br>Command2<br>… | Init<br>Hourly<br>Daily (Mon-Sun)<br>Weekdays1 (Mo-Fr)<br>Weekdays2 (Mo-Sa)<br>Weekend (Sa+Su)<br>Weekly<br>Monthly | ... |
| | Clear all | No<br>Yes | | | |
| Service | Access protect. | *Password?* | None<br>Lock menu<br>Lock all | | |

| 1. Level | 2. | 3. | 4. | 5. | xth |
|---|---|---|---|---|---|
| | Password | *Password?* | 0000 | | |
| | Clear counter | Stroke counter<br>Volume counter<br>All | | | |
| | Log book | Log book entries | ... | | |
| | | Filter | None<br>Warn.+error only<br>Error only<br>Warnings only<br>Events only | | |
| | Replace diaphragm | Back<br>To change position | | | |
| | Display | Brightness | | | |
| | | Contrast | | | |
| | Factory settings | *Password?* | Yes<br>No | | |
| | Diaphragm part number: XXXXXXX | | | | |
| | Spare parts kit part number: XXXXXXX | | | | |
| Language | English<br>German<br>Frenchç<br>Spanishñ<br>... | | | | |

*1 with *„Automatic“* - *„on“* - see Chap. *„Set Up“* - *„Settings“* - *„Automatic“*

*2 with *„Automatic“* - *„off“* / with conventional operating mode

Menus may be missing or added depending on the design and equipment on the pump.

# 25 Continuous Displays and Secondary Displays

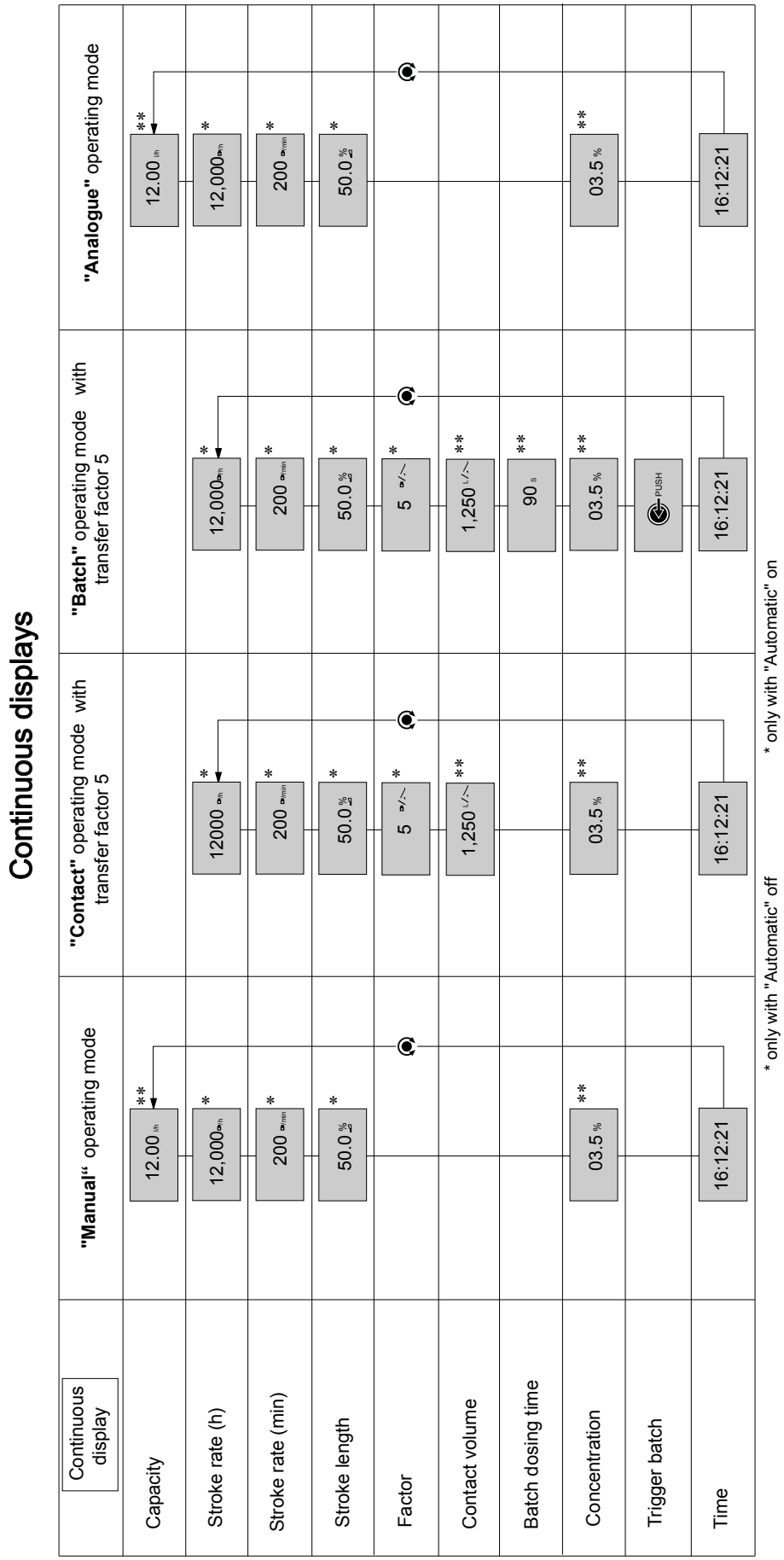

# Auxiliary displays in the continuous display

| Auxiliary display | Mode **"Manual"** | Mode **"Batch"** with transfer factor 5 | Mode **"Contact"** with transfer factor 5 | Mode **"Analogue"** |
|---|---|---|---|---|
| Capacity | 12.00 L / h | | | 12.00 L / h |
| Stroke rate | 12000 ⊡/h | 12000 ⊡/h | 12000 ⊡/h | 12000 ⊡/h |
| Factor | | 5 ⊡/⊥ | 5 ⊡/⊥ | |
| Remaining strokes | | | 25,00↓⊡ [1] | |
| Remaining litres | | | 000,833↓L [1] | |
| Total number of strokes | 86500 ⊡ | 86500 ⊡ | 86500 ⊡ | 86500 ⊡ |
| Stroke length | 50 % | 50 % | 50 % | 50 % |
| Signal current (at the input) | | | | 12,7 mA [2] |
| Dosing mode | slow HV1 | slow HV1 | slow HV1 | slow HV1 |
| Pressure display | 12.5 bar | 12.5 bar | 12.5 bar | 12.5 bar |
| Time | 16:12:21 | 16:12:21 | 16:12:21 | 16:12:21 |
| Date | 2015 - 03 - 27 | 2015 - 03 - 27 | 2015 - 03 - 27 | 2015 - 03 - 27 |

1 = only with "Storage tank" function extension
2 = only with current output

# 26 Installation instructions: Retrofitting Relays

These installation instructions apply to:

| | Order No. |
|---|---|
| Fault indicating relay GMXa | 1050643 |
| Fault indicating and pacing relay GMXa | 1050654 |

**WARNING!**

**Danger of electrocution.**

Live parts can be accessed if the slot for the relay has been opened.

– Disconnect the pump from the mains/power supply prior to commencing work.
– Only operate the pump with a liquid-tight screwed slot for the relay and connector for the relay cable.

**Scope of delivery**

1 - Relay board, fully ass.

1 - Relay cable, fully assembled, with connector

1 - Seal

**Materials**

Torx spanner T 25

*A small bright pocket torch can help to find the 4x2 contact in the slot for the relays more easily.*

Personnel: ■ Electrician

Prerequisite:

The pump is electrically disconnected.

1. Remove the cover of the slot.
2. Hold the relay board by the edge of the relay cover.
3. Carefully insert the relay board into the slot for the relay - the opening in the board in the slot will help with this (A); at the same time make sure that the 3x2 pins on the relay board are sitting correctly and on the left contacts of the 4x2 contact in the slot (B) - see Figure
4. Push the relay board with gentle pressure into the slot.
5. Use the screws to screw the relay cover until liquid-tight with the housing.
6. Insert the seal of the connector of the relay cable into the relay cover.
7. Push the connector onto the pins of the relay cover and then tighten the screw into the connector until liquid-tight.

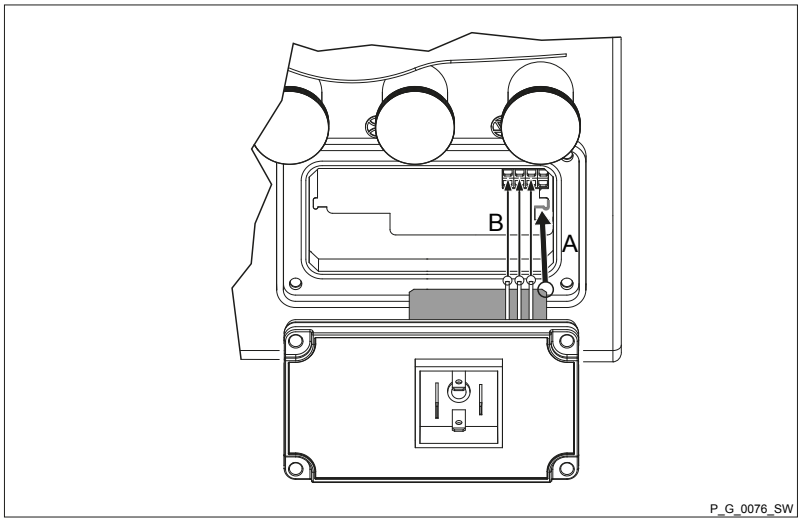
B
A
P_G_0076_SW

# 27 Index


## 1, 2, 3 ...

"External control" terminal . . . . . 38
4 - 20 mA . . . . . 50

## A

About this pump . . . . . 8
Access code . . . . . 74
Access protect. . . . . 46, 73
Accuracy . . . . . 95
Acknowledgement . . . . . 77
Action . . . . . 72
Adjustment . . . . . 65
Administration functions for commands . . . . . 71
Air humidity . . . . . 97
Air lock . . . . . 56
Analogue input . . . . . 38, 50
Analogue operating mode . . . . . 24, 39
Analogue output . . . . . 67
Anti-kink device . . . . . 34
Applied harmonised standards . . . . . 152
Approvals . . . . . 153
Assembly . . . . . 27
Automatic . . . . . 52
Automatic bleeding . . . . . 25
AUX . . . . . 66
Auxiliary capacity . . . . . 24, 25, 38, 39, 66
Auxiliary frequency . . . . . 24, 25, 38, 39, 66

## B

Back pressure fluctuations . . . . . 56
Basic Principles for Setting up the Control . . . . . 44
Batch . . . . . 23, 50, 58, 60, 61, 66
Bleed . . . . . 66
Bleed valve . . . . . 33, 34, 69
Bleed, function . . . . . 24
Bluetooth . . . . . 64
Bluetooth Name . . . . . 47
Brightness . . . . . 75
BT . . . . . 64
BT device address . . . . . 47

## C

Calibration . . . . . 24, 63
Capacity . . . . . 149
Cavitation . . . . . 54
Change . . . . . 71
Check adjustable variables . . . . . 77
Checking adjustable variables . . . . . 46
Cleaning the diaphragm rupture sensor . . . . . 85
Cleaning valves . . . . . 82
Clear . . . . . 71, 74
Clear all . . . . . 73
Clear counter . . . . . 74
Clear, all . . . . . 73
Clearing the program . . . . . 73
Clickwheel . . . . . 16
Climate . . . . . 97
Code . . . . . 74
Compatibility . . . . . 97
Compensation . . . . . 56
Concentration . . . . . 57
Concentration entry . . . . . 57
Connector size . . . . . 94
Contact . . . . . 23, 48
Contact memory . . . . . 74
Contact water meter . . . . . 49
Continuous display . . . . . 17
Continuous displays . . . . . 46, 161
Contrast . . . . . 75
Control elements . . . . . 16
Creating a program . . . . . 71
Current output . . . . . 43
Current stroke volume . . . . . 47
Curve . . . . . 50

## D

Date . . . . . 47, 70, 75, 91
Declaration of Conformity . . . . . 152
Decommissioning . . . . . 92
Decontamination declaration . . . . . 14
Degree of protection . . . . . 97
Demonstration purposes . . . . . 64
Designation of the product . . . . . 152
Detailed view . . . . . 75, 91
DFMa . . . . . 53
Diagrams for Setting the Capacity . . . . . 149
Diaphragm . . . . . 76
Diaphragm part number . . . . . 76
Diaphragm replacement . . . . . 83
Diaphragm replacement position . . . . . 75
Diaphragm rupture . . . . . 68
Diaphragm rupture indicator . . . . . 40
Dimensional Drawings . . . . . 140
Directly changeable variables . . . . . 77
Discharge stroke . . . . . 21, 53
Discharge valve . . . . . 34

Display . . . . . 71, 75
Disposal . . . . . 93
Dosing monitor . . . . . 39, 67
Dosing precision . . . . . 56
Draining the liquid end . . . . . 93
DulcoFlow . . . . . 53
DulcoFlow® . . . . . 67

E

Electrical data . . . . . 96
Electrical Installation . . . . . 36
Emergency . . . . . 12
Error . . . . . 66, 89
Error processing . . . . . 51
Events . . . . . 90
Example . . . . . 73
Exploded drawings . . . . . 99
External contact . . . . . 25, 38, 39
External frequency changer . . . . . 25

F

Factor . . . . . 48, 50
Factory settings . . . . . 75
Fast . . . . . 53
Fault . . . . . 25, 89
FAULT . . . . . 87
Fault indicating and pacing relay option . . . . . 25
Fault indicating relay . . . . . 25, 41, 42, 43
Fault indicator . . . . . 16
Fault indicator (red) . . . . . 25
Fault message . . . . . 17
Fault messages . . . . . 87
Fault statuses . . . . . 25
Faults without a fault message . . . . . 86
Fill . . . . . 53
Flow . . . . . 24
Flow control . . . . . 67
Flow Control . . . . . 67
Functional Description . . . . . 21
Functions . . . . . 24, 25

G

Gas lock . . . . . 56
Gaseous feed chemicals . . . . . 54
Generating instructions . . . . . 71

H

Hardware . . . . . 47
Hemisphere . . . . . 70
Hierarchy of operating modes . . . . . 25
HMI version . . . . . 47
HV1 . . . . . 54

I

Identification of safety notes . . . . . 9
Identifier . . . . . 17
Identity Code . . . . . 6, 47
Information . . . . . 47
Information in the event of an emergency . . . . . 12
Init . . . . . 71
Inputs/outputs . . . . . 65
Installation, Electrical . . . . . 36
Installation, hydraulic . . . . . 29
Installing hose lines . . . . . 30
Intended Use . . . . . 9
IP . . . . . 97

K

Keys . . . . . 16, 20

L

Language . . . . . 76
LCD screen . . . . . 16, 75
Leakage hole . . . . . 79
Level . . . . . 68
Level switch . . . . . 24, 39, 41
Linear curve . . . . . 51
Lock . . . . . 73
Log book . . . . . 75, 89, 90
Log book entries . . . . . 75
Log book entry . . . . . 75, 91
Lost in hyperspace . . . . . 44
Lower side band . . . . . 51

M

mA input . . . . . 38
mA Input . . . . . 50
mA output . . . . . 25, 67
Main display . . . . . 17
Mains cable . . . . . 37
Maintenance . . . . . 79
Manual . . . . . 23, 25, 48, 57
Material specifications . . . . . 96
Maximum capacity . . . . . 47
Maximum metering rate . . . . . 47
Memory . . . . . 48, 50
Menu key . . . . . 47
Metering . . . . . 53, 66, 73
Metering profiles . . . . . 21, 53
Metering pumps with bleed valve . . . . . 33
Metering pumps with self-bleeding . . . . . 33
Metering pumps without integral relief valve . . . . . 35

Metering pumps without self-bleeding . . . . . 30
Minimum Stroke Length . . . . . 95
Monitoring . . . . . 56

N

New . . . . . 71
Nominal pressure . . . . . 55
Normal . . . . . 54

O

Operating indicator (green) . . . . . 16, 25
Operating Menu . . . . . 156
Operating mode selection . . . . . 47
Operating modes . . . . . 23, 25
Operating overview . . . . . 154
Operation . . . . . 77
Optimum . . . . . 53
Option . . . . . 66
Ordering information . . . . . 139
Out-gassing . . . . . 52, 56
Overview of equipment . . . . . 15

P

Pacing relay . . . . . 42, 43
Password . . . . . 46, 74
Pause . . . . . 24, 25, 38, 68
Performance data . . . . . 94
Polarity . . . . . 66
Power consumption . . . . . 96
Pressure . . . . . 55
Pressure adjustment . . . . . 65
Pressure display . . . . . 17
Pressure stage . . . . . 55
Pressure unit . . . . . 65
Priming . . . . . 77
Priming key . . . . . 25
Priming pressure . . . . . 33
Priming time . . . . . 70
Protection against contact and humidity . . . . . 97
Protection class . . . . . 97
Protection menu . . . . . 73
Pulse control . . . . . 49
Pump active . . . . . 66

Q

Qualification of personnel . . . . . 12

R

Relay . . . . . 24, 40, 66
Relay polarity . . . . . 67
Relay type . . . . . 66
Relevant directives . . . . . 152
Repairs . . . . . 81
Replace diaphragm . . . . . 75
Replacement position . . . . . 83
Replacing the diaphragm . . . . . 83
Replacing the dosing head . . . . . 64
Reproducibility . . . . . 95
Retrofit kits . . . . . 139
Retrofitting Relays . . . . . 163
Return line . . . . . 35
Return pipe . . . . . 30, 33

S

Safety Chapter . . . . . 9
Safety declaration form . . . . . 14
Safety Requirements . . . . . 97
Scope of Delivery . . . . . 14
Secondary display . . . . . 17
Secondary displays . . . . . 46, 162
SEK . . . . . 33
SEK types . . . . . 23
Self-Bleeding . . . . . 23
Semiconductor switch . . . . . 42, 43
SER types . . . . . 23
Serial number . . . . . 47, 152
Service . . . . . 73
Set time . . . . . 70
Set up . . . . . 44
Set up mode . . . . . 46
Set Up, chapter . . . . . 47
Set-up overview . . . . . 154
Setting the timer . . . . . 71
settings . . . . . 47
Shipping weight . . . . . 98
Side band . . . . . 50, 51, 52
Sleeve . . . . . 34
Slot . . . . . 16
Slow . . . . . 53
Sockets . . . . . 16
Software . . . . . 47
Sound pressure level . . . . . 13, 98
Spare parts kit . . . . . 76
Spare parts kit part number . . . . . 76
Standard installation . . . . . 35
Starting a batch . . . . . 77
Stop . . . . . 24, 25
Storage . . . . . 14
Stroke counter . . . . . 74
Stroke length . . . . . 52

Stroke length, manual . . . . . 52
Stroke rate . . . . . 66
Stroke rate since switching on . . . . . 75, 91
Suction stroke . . . . . 21, 22, 52, 54
Summer time . . . . . 70
Sunday . . . . . 70
Supplementary information . . . . . 2
Supply voltage . . . . . 37
Switch-on counter . . . . . 47
Switching-on duration . . . . . 75, 91
Symbols . . . . . 35
System . . . . . 64

## T

Technical data . . . . . 94
Temperature . . . . . 75, 91
Temperatures . . . . . 96
Test (function) . . . . . 25
Time . . . . . 47, 71, 75, 91
Time event . . . . . 71
Timer . . . . . 70
Timer activation . . . . . 71
Timer, function . . . . . 24
Total metering volume . . . . . 47
Total number of strokes . . . . . 47, 75, 91
Total operating time . . . . . 47, 75, 91
Town . . . . . 70
Transport . . . . . 14
Troubleshooting . . . . . 86

## U

Unpacking . . . . . 14
Upper side band . . . . . 52

## V

Versions . . . . . 47
Viscosity . . . . . 52, 54, 95
Volume counter . . . . . 74
Volume unit . . . . . 65

## W

Warning . . . . . 66, 90
WARNING . . . . . 88
Warning indicator . . . . . 16
Warning indicator (yellow) . . . . . 25
Warning message . . . . . 17, 41
Warning messages . . . . . 88
Warning sign . . . . . 9
Warnings . . . . . 90

ProMinent GmbH
Im Schuhmachergewann 5-11
69123 Heidelberg, Germany
Germany
Telephone: +49 6221 842-0
Fax: +49 6221 842-419
Email: info@prominent.com
Internet: www.prominent.com

Heidelberg, 4, en_GB

© 2015

PN: 1095966

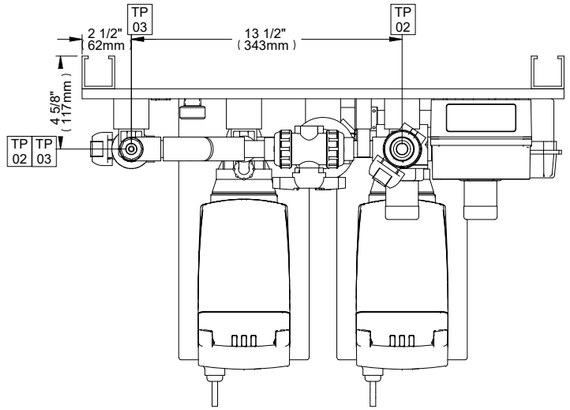


| TERMINATION POINT SCHEDULE | | |
|---|---|---|
| TP | SERVICE | CONNECTION |
| 01A, 01B | SUCTION/INLET | 1/2"x3/8" TUBE, FOOT VALVE |
| 02 | DISCHARGE/OUTLET | 1/2" SW OR FNPT, PVC |
| 03 | CALIBRATION COLUMN VENT BACK TO TANK | 1/2"x3/8" TUBE, PVC |
| 04 | PRESSURE RELIEF VALVE VENT BACK TO SAFE LOCATION | 1/2"x3/8" TUBE, PVC |
| 05 | CALIBRATION COLUMN DRAIN BACK TO TANK | 1/2"x3/8" TUBE, PVC |

PROMINENT METERING PUMP
SOLENOID ACTUATED DIAPHRAGM TYPE
MODEL: GMXA1604PVT2M000UDC0300EN
FLOW: 3.6 LPH (0.95 USGPH)
PRESSURE: 232 PSIG (16 BAR) -MAX.
SUCTION LIFT: 19.6 ft (6m)
LIQUID END MATERIAL: PVDF/PTFE
TYP. X2

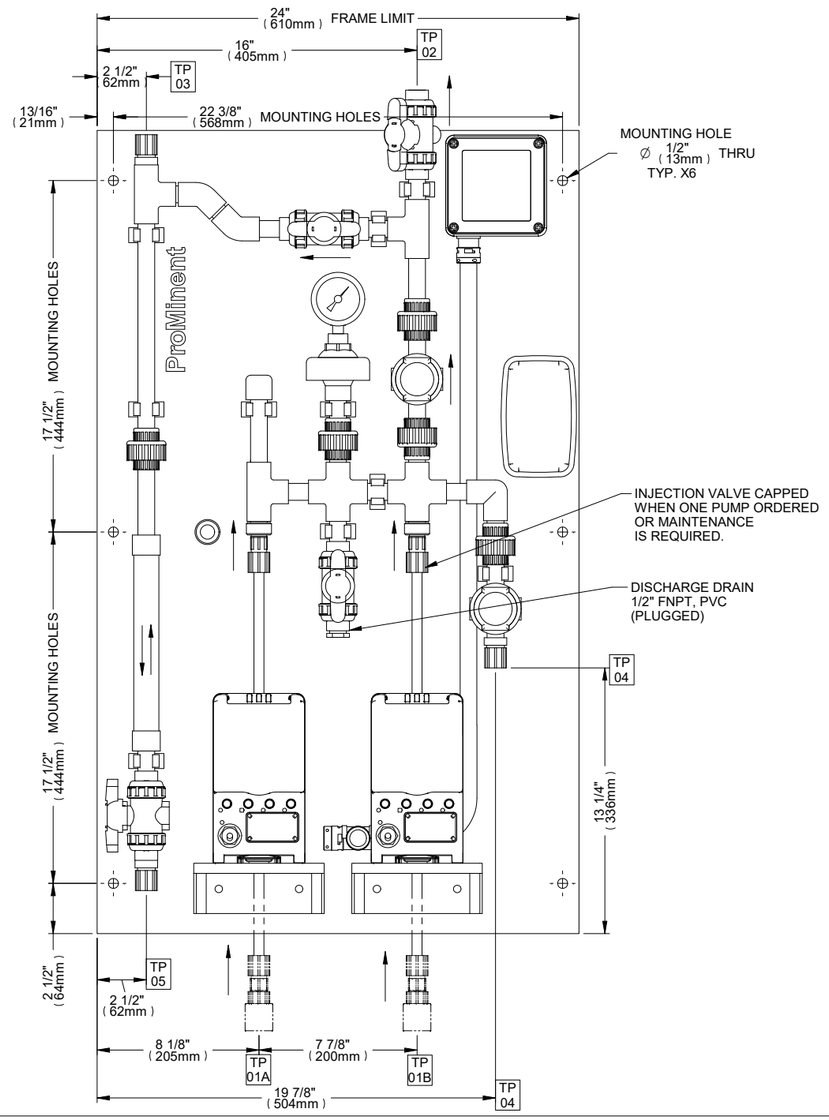


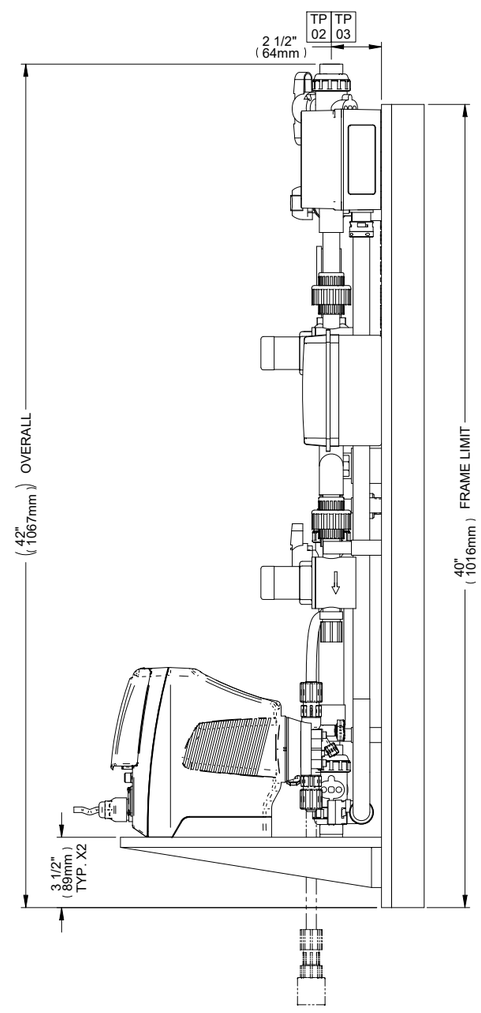


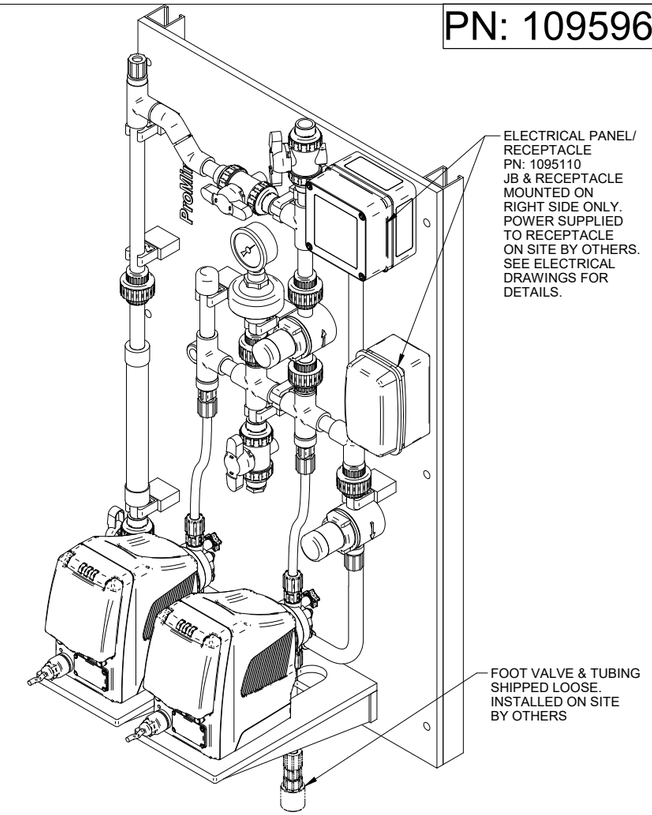


| REV | DATE: YY/MM/DD | DESCRIPTION | BY | APPD | REVD |
|---|---|---|---|---|---|
| 2 | 2019/04/30 | ADDED SHIP LOOSE DISCHARGE HEADER ISSUED FOR CONSRUCTION | RS | WS | |
| 1 | 2019/02/07 | ADDED SHIP LOOSE MATERIALS INITIAL RELEASE | RS | WS | |
| 0 | 2018/12/12 | INITIAL RELEASE | RS | WS | |

REVISIONS

CUSTOMER
SUEZ WATER TECHNOLOGIES & SOLUTIONS

SUBJECT

PFC PROSIP No 1083173
PURCHASE ORDER No --
PURCHASER'S EQUIP. No SWTS-P2-SDW-PE-0050-A

TITLE SUEZ PROSIP-SW 1/2" PVC-EPDM, 2 PUMP - GENERAL ARRANGEMENT -

THIS DRAWING IS THE PROPERTY OF PROMINENT FLUID CONTROLS LTD. AND SHALL NOT BE COPIED OR TRANSFERRED WITHOUT THE WRITTEN CONSENT OF PROMINENT FLUID CONTROLS LTD.

ENGINEERS SEAL

ProMinent®
THE PROMINENT GROUP OF COMPANIES

GUELPH - ONTARIO - CANADA

PROMINENT FLUID CONTROLS LTD.
490 SOUTHGATE DRIVE.
GUELPH, ONTARIO, CANADA
N1H 6J3
TEL. 519 836 5692 FAX. 519 836 5226

PROMINENT FLUID CONTROLS LTD.
RIDC PARK WEST
136 INDUSTRY DRIVE,
PITTSBURGH P.A., USA. 15275
TEL. 412 787 2484 FAX. 412 787 0704

| | | | |
|---|---|---|---|
| DESIGNED | RS | APPROVED | |
| DRAWN | RS | SCALE | NTS |
| CHECKED | WS | DATE | 2018/12/12 |

SHEET: 1/2

CUSTOMER DWG No WTS-2P-SD-PEW-0050-A
PFC DWG No 1095966-200
REV 2

PN: 1095966

COMPONENTS CHART

1 / 2 TOP SIDE = CHART NUMBER / BOTTOM SIDE = QUANTITY NUMBER

| Item Number | Document Number | Title | Quantity |
|---|---|---|---|
| 1 | 1083175 | CALIBRATION COLUMN ASSEMBLY, 1/2" PVC-EPDM , 100mL, WALLMOUNT | 1 |
| 2 | 1082763 | DISCHARGE HEADER, SF-W 1/2" PVC, EPDM | 1 |
| 3 | 7903822 | FITTING: INJECTION VALVE CAP - 1/2"MNPTxM20Fx1.5 - PVC | 1 |
| 4 | 7260005 | FITTING: TEE 1/2" SxSxS, PVC, SCH 80 | 1 |
| 5 | 7900317 | LABEL: PROMINENT LABEL, WHITE & ORANGE x 1" | 1 |
| 6 | 1083174 | PROSIP BACK PRESSURE VALVE ASSEMBLY, S/M-W 1/2" PVC-EPDM | 1 |
| 7 | 1076215 | SUPPORT: FRAME WALLMOUNT BACKBOARD 24" x 40" x 1/2" HDPE SHEET | 7FT^2 |
| 8 | 7260010<br>7902227 | SUPPORT: PIPE CLIP 1/2" (20mm) WITH 1-1/2" STANDOFF | 2 |
| 9 | 1083177 | SUPPORT: PUMP SHELF, ONE PUMP, WALL MOUNT, POLYETHYLENE | 2 |
| 10 | 7904309 | SUPPORT: UNISTRUT, PVC, 1 5/8" SQ x 40" LONG | 7FT |
| 11 | 7901183 | VALVE: BALL VALVE, 1/2" PVC/EPDM, TYPE 21 (SOCKET & THREADED ENDS) CHEMLINE | 1 |

**ADDITIONAL PARTS:**
1/2"x3/8" BRAIDED TUBE - 7902938 - 4FT
(FOR PUMP DISCHARGE LINES)

**SHIP LOOSE PARTS:**
1/2"x3/8" BRAIDED TUBE - 7902938 - 10FT
(FOR PRESSURE RELIEF VALVE VENT LINES)
ADPATER 1/2" MNPTxM20M, PVC - 7152222 - 1PC
ADPATER 1/2" SPIGxM20M, PVC - 7740130 - 1PC
GAMMA NUT, 1/2"x3/8" TUBE, PVC/EPDM CONNECTION SET - 740160 - 1PC
BACK PRESSURE/PRESSURE RELIEF VALVE 1/2" SW, PVC - 1019883 - 1PC
Y-STRAINER 1/2" SW, PVC/EPDM - 7900293 - 1PC
CHECK VALVE 1/2" SW, PVC/EPDM - 7901156 - 1PC
1/2"x3/8" BRAIDED TUBE - 7902938 - 20FT
FOOT VALVE 1/2"x3/8" PVC/EPDM - 7924549 - 2PC
(FOR PUMP SUCTION LINES)

**SHIP LOOSE HEADER**

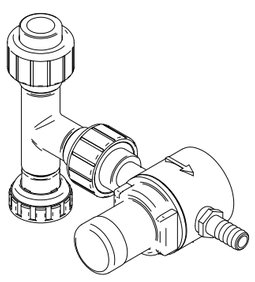

**SYSTEM DISCHARGE P.R.V. HEADER**
**PN: 1103630**

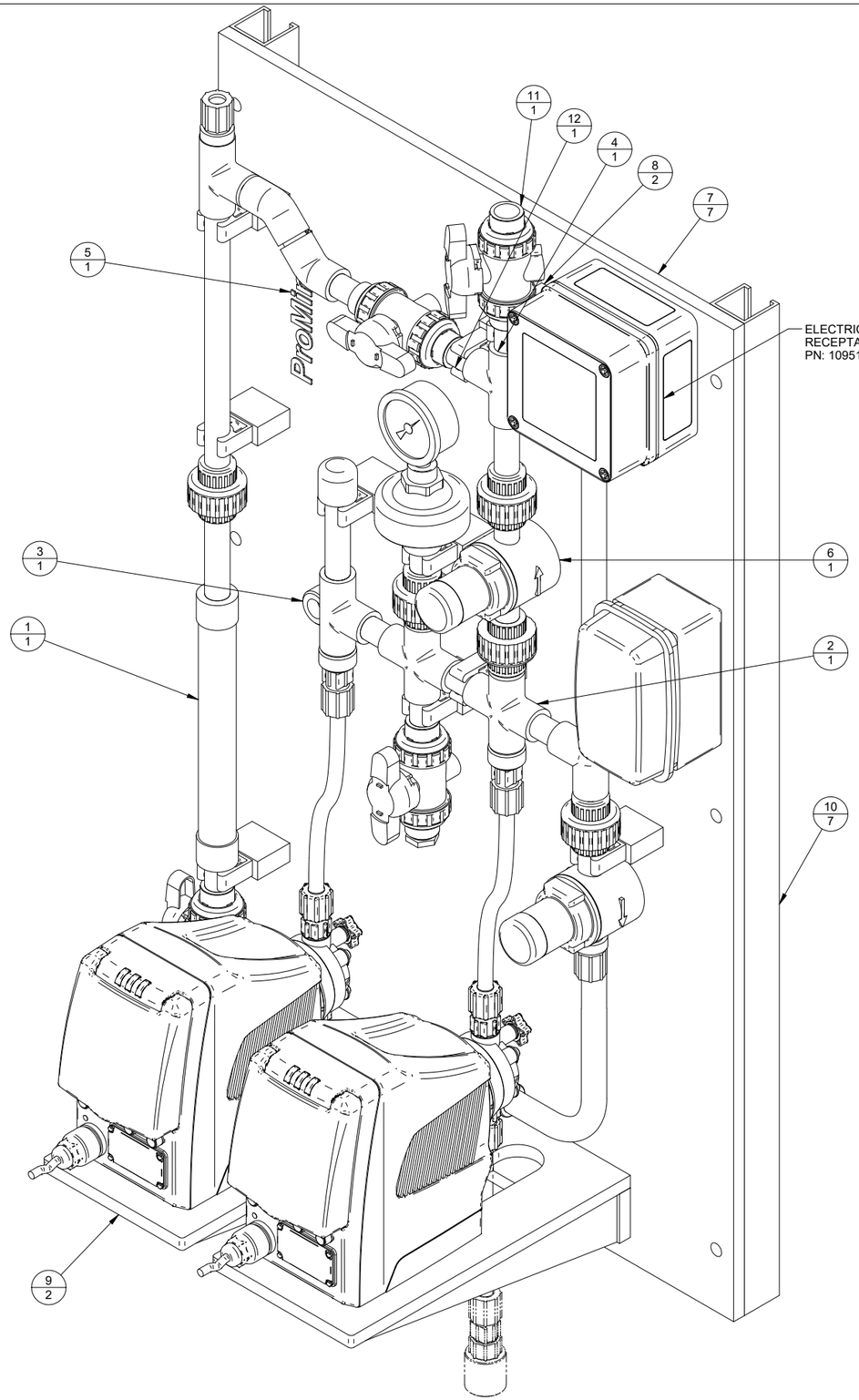


PROMINENT METERING PUMP
SOLENOID ACTUATED DIAPHRAGM TYPE
MODEL: GMXA1604PVT2M000UDC0300EN
FLOW: 3.6 LPH (0.95 USGPH)
PRESSURE: 232 PSIG (16 BAR) -MAX.
SUCTION LIFT: 19.6 ft (6m)
LIQUID END MATERIAL: PVDF/PTFE
TYP. X2

NOTES:

1. ALL PIPING CONNECTIONS ARE 1/2" SCHEDULE 80 PVC SOCKETWELD UNLESS OTHERWISE REQUIRED BY PIPELINE DEVICES.

2. SEAL MATERIAL IS PTFE AND EPDM UNLESS OTHERWISE SPECIFIED.

3. SYSTEM DESIGNED TO ACCOMMODATE SOLENOID FLEX TUBE PUMPS ONLY. CONCEPT, BETA, & GAMMA X.

4. PIPE SUPPORT FRAME IS MADE FROM 1/2" THICK HDPE SHEET & PVC STRUT. FRAME SUPPORT IS MADE BY BOLTED CONSTRUCTION.

5. ALL MOUNTING HARDWARE IS 304SS. ALL PIPE CLIPS AND STANDOFFS ARE PLASTIC.

6. CHARGING PRESSURE OF THE PULSATION DAMPENERS TO BE AT 80% OF THE DISCHARGE LINE OPERATING PRESSURE.

7. ALL INTERCONNECTING PIPE & FITTINGS, HARDWARE, GASKETS, SEALS AND WIRING ARE DONE ON SITE BY OTHERS. SHIPPED LOOSE MATERIALS ARE LISTED ON B.O.M. - INSTALLATION IS BY OTHERS.

8. ALL INTERCONNECTING PIPING SHALL BE FULLY & INDEPENDENTLY SUPPORTED BY OTHERS.

9. TOLERANCE ON ALL TERMINATION POINTS IS +/- 3/8" (10mm) UNLESS SPECIFIED BY CUSTOMER.

10. APPROX. SHIPPING WEIGHT: 75 Lb (34 Kg)
APPROX. OPERATING WEIGHT: 85 Lb (38 Kg)

11. SYSTEM IS FOR INDOOR INSTALLATION ONLY.

12. SHIP LOOSE SYSTEM DISCHARGE P.R.V. HEADER, INSTALLED ON SITE BY OTHERS.

13. DESIGN NOTES:

- DESIGN TEMPERATURE: MAX: 86ºF (30ºC), MIN: 32ºF (0ºC)

UPSTREAM INJECTION PUMP-SUCTION:

- DESIGN PRESSURE: 14.5 PSIG (100kPa)
- MIN. TEST PRESSURE: 25 PSIG (172kPa)

DOWNSTREAM INJECTION PUMP-DISCHARGE:

- DESIGN PRESSURE: 150 PSIG (1034 kPa) MAX
- MIN. TEST PRESSURE: 150 PSIG (1034 kPa)

TESTING CONDITION:

- TEST TYPE: HYDROSTATIC
- TEST MEDIUM: WATER
- TEST TEMPERATURE: AMBIENT 68ºF (20ºC)
- TEST DURATION: 10 MIN. (MINIMUM)

CORROSION ALLOWANCE: 0.0" (0.0mm).

| REV | DATE: YY/MM/DD | DESCRIPTION | BY | APPD | REVD |
|---|---|---|---|---|---|
| 2 | 2019/04/30 | ADDED SHIP LOOSE DISCHARGE HEADER<br>ISSUED FOR CONSRUCTION | RS | WS | |
| 1 | 2019/02/07 | ADDED SHIP LOOSE MATERIALS<br>INITIAL RELEASE | RS | WS | |
| 0 | 2018/12/12 | INITIAL RELEASE | RS | WS | |

REVISIONS

CUSTOMER
SUEZ WATER TECHNOLOGIES & SOLUTIONS

SUBJECT

PFC PROSIP No 1083173
PURCHASE ORDER No --
PURCHASER'S EQUIP. No SWTS-P2-SDW-PE-0050-A

TITLE SUEZ PROSIP-SW 1/2" PVC-EPDM, 2 PUMP
- BILL OF MATERIALS -

THIS DRAWING IS THE PROPERTY OF PROMINENT FLUID CONTROLS LTD. AND SHALL NOT BE COPIED OR TRANSFERRED WITHOUT THE WRITTEN CONSENT OF PROMINENT FLUID CONTROLS LTD.

ENGINEERS SEAL

ProMinent®
THE PROMINENT GROUP OF COMPANIES

GUELPH - ONTARIO - CANADA

PROMINENT FLUID CONTROLS LTD.
490 SOUTHGATE DRIVE.
GUELPH, ONTARIO, CANADA
N1H 6J3
TEL. 519 836 5692 FAX. 519 836 5226

PROMINENT FLUID CONTROLS LTD.
RIDC PARK WEST
136 INDUSTRY DRIVE,
PITTSBURGH P.A., USA. 15275
TEL. 412 787 2484 FAX. 412 787 0704

| | | | |
|---|---|---|---|
| DESIGNED | RS | APPROVED | |
| DRAWN | RS | SCALE | NTS |
| CHECKED | WS | DATE | 2018/12/12 |

SHEET: 2/2

CUSTOMER DWG No WTS-2P-SD-PEW-0050-A
PFC DWG No 1095966-200
REV 2

PN: 1096041

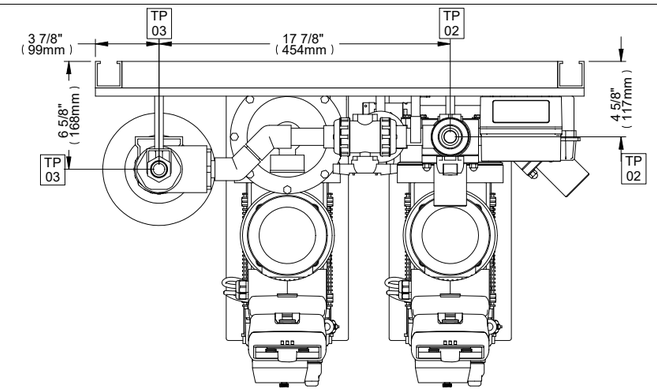


| TERMINATION POINT SCHEDULE | | |
|---|---|---|
| TP | SERVICE | CONNECTION |
| 01A, 01B | SUCTION/INLET | 3/4" TUBE / FOOT VALVE |
| 02 | DISCHARGE/OUTLET | 3/4" SW OR FNPT, PVC |
| 03 | CALIBRATION COLUMN VENT BACK TO TANK | 3/4" TUBE, PVC |
| 04 | PRESSURE RELIEF VALVE VENT BACK TO SAFE LOCATION | 3/4" TUBE, PVC |
| 05 | CALIBRATION COLUMN DRAIN BACK TO TANK | 3/4" TUBE, PVC |

PROMINENT METERING PUMP
MECHANICALLY ACTUATED DIAPHRAGM TYPE
MODEL: S2CBH07220PVTS070UD11001EN
FLOW: 271 LPH (71.6 USGPH)
PRESSURE: 102 PSIG (7 BAR) -MAX.
SUCTION LIFT: 16ft (5m)
LIQUID END MATERIAL: PVDF/PTFE
TYP. X2
PN: 1103562

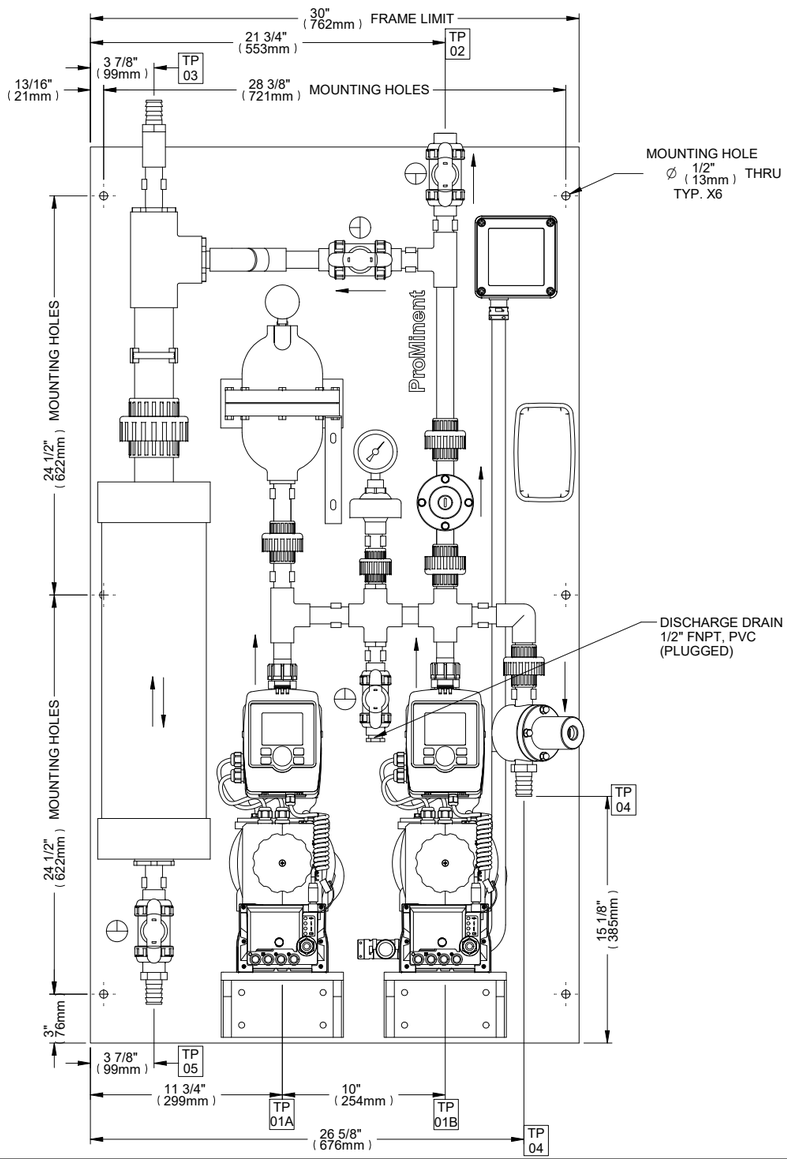


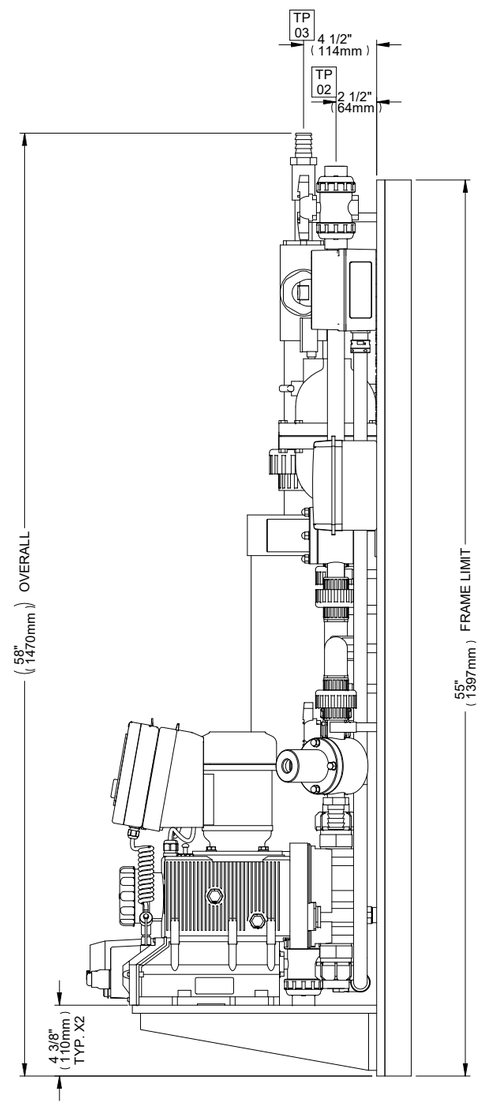


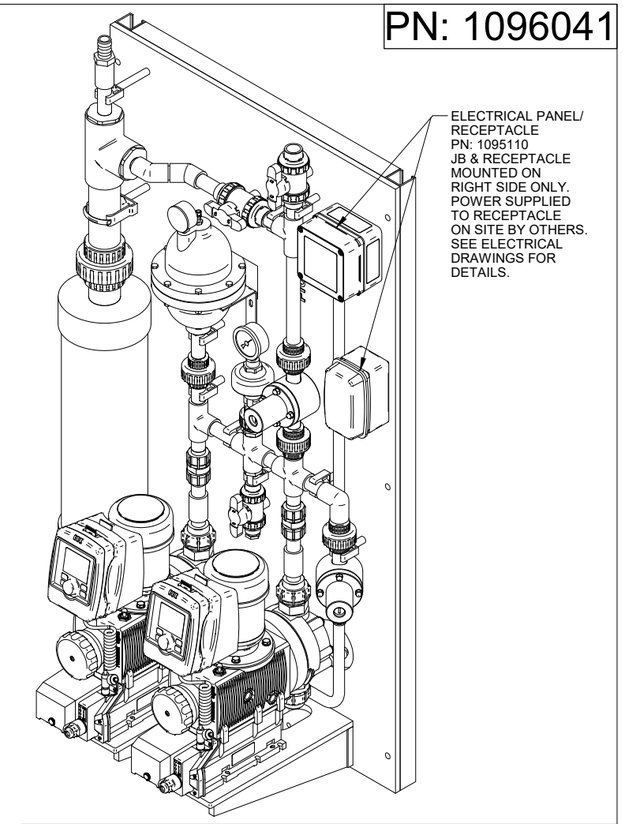


**VENTED BALL VALVES REQUIRED**

-THIS SYMBOL INDICATES SIDE OF THE VALVE THAT THE BALL IS TO BE VENTED TO. DRILL Ø1/8" HOLE.

| REV | DATE: YY/MM/DD | DESCRIPTION | BY | APPD | REVD |
|---|---|---|---|---|---|
| 3 | 2019/11/08 | CHANGED PUMP TO SIGMA X & PUMP IDENT-CODE ISSUED FOR CONSTRUCTION | RS | -- | |
| 2 | 2019/05/02 | ADDED SHIP LOOSE DISCHARGE HEADER INITIAL RELEASE | RS | WS | |
| 1 | 2019/02/07 | ADDED SHIP LOOSE MATERIALS INITIAL RELEASE | RS | WS | |

REVISIONS

CUSTOMER
SUEZ WATER TECHNOLOGIES & SOLUTIONS

SUBJECT

PFC PROSIP No 1093737
PURCHASE ORDER No --
PURCHASER'S EQUIP. No SWTS-P2-MDW-PV-0075-B

TITLE SUEZ PROSIP-MW 3/4" PVC-VITON, 2 PUMP - GENERAL ARRANGEMENT -

THIS DRAWING IS THE PROPERTY OF PROMINENT FLUID CONTROLS LTD. AND SHALL NOT BE COPIED OR TRANSFERRED WITHOUT THE WRITTEN CONSENT OF PROMINENT FLUID CONTROLS LTD.

ENGINEERS SEAL

ProMinent®
THE PROMINENT GROUP OF COMPANIES

GUELPH - ONTARIO - CANADA

PROMINENT FLUID CONTROLS LTD.
490 SOUTHGATE DRIVE.
GUELPH, ONTARIO, CANADA
N1H 6J3
TEL. 519 836 5692 FAX. 519 836 5226

PROMINENT FLUID CONTROLS LTD.
RIDC PARK WEST
136 INDUSTRY DRIVE,
PITTSBURGH P.A., USA. 15275
TEL. 412 787 2484 FAX. 412 787 0704

| | | | |
|---|---|---|---|
| DESIGNED | RS | APPROVED | |
| DRAWN | RS | SCALE | NTS |
| CHECKED | -- | DATE | 2018/12/07 |

SHEET: 1/2

CUSTOMER DWG No WTS-2P-MD-PVW-0075-A
PFC DWG No 1096041-200
REV 3

PN: 1096041

COMPONENTS CHART

1 TOP SIDE = CHART NUMBER
2 BOTTOM SIDE = QUANTITY NUMBER

| Item Number | Document Number | Title | Quantity |
|---|---|---|---|
| 1 | 1093740 | BACK PRESSURE VALVE ASSEMBLY, 3/4" PVC-VITON | 1 |
| 2 | 1093738 | CALIBRATION COLUMN ASSEMBLY, WALL MOUNT, 3/4" PVC-VITON, 10000mL | 1 |
| 3 | 1082756 | DISCHARGE HEADER, PROSIP MF-W, 3/4" PVC, VITON | 1 |
| 4 | 7741471 | FITTING: PIPE, 3/4", PVC, SCH 80 | 3FT |
| 5 | 7741483 | FITTING: TEE 3/4", SxSxS, PVC, SCH 80 | 1 |
| 6 | 7900317 | LABEL: PROMINENT LABEL, WHITE & ORANGE x 1" | 1 |
| 7 | 1082740 | PULSATION DAMPENER ASSEMBLY, 3/4" PVC-VITON, 1397mL (85 cu. in.) | 1 |
| 8 | 7741462 | SUPPORT: 3/4" (25mm) PIPE CLIP with 1/4" x 1-1/4" LONG PVC PIPE STANDOFF | 2 |
| 9 | 1076215 | SUPPORT: BACKBOARD 30" x 55" x 1/2" HDPE SHEET | 13FT^2 |
| 10 | 1093743 | SUPPORT: PUMP SHELF, ONE PUMP, WALL MOUNT, 1/2"-3/4" PIPE, MOTOR PUMPS, POLYETHYLENE | 2 |
| 11 | 7904309 | SUPPORT: UNISTRUT PVC 1-5/8" x 1-5/8" | 13FT |
| 12 | 7152164 | VALVE: BALL VALVE, 3/4" PVC/VITON, TYPE 21 (SOCKET & THREADED ENDS) CHEMLINE | 1 |

**SHIP LOOSE PARTS:**

HOSE BARB, 3/4" SPIG x 3/4" TUBE, PVC - 1083230 - 2PCS
HOSE BARB, DN15 x 3/4" TUBE, PVC - 811407 - 2PCS
FOOT VALVE 3/4" PVC-VITON - 803723 - 2PCS
3/4" BRAIDED TUBE - 7037041- 12FT
HOSE CLAMP 3/8"-1" - 1059963 - 4PC
(FOR PUMP SUCTION INLET/S)
3/4" BRAIDED TUBE - 7037041- 10FT
HOSE CLAMP 3/8"-1" - 1059963 - 1PC
(FOR P.R.V. VENT LINE)
BACK PRESSURE/PRESSURE RELIEF VALVE 3/4" SW, PVC - 1019885 - 1PC
Y-STRAINER 3/4" SW, PVC/VITON - 7900296 - 1PC
CHECK VALVE 3/4" SW, PVC/VITON - 7901351- 1PC

**SHIP LOOSE HEADER**

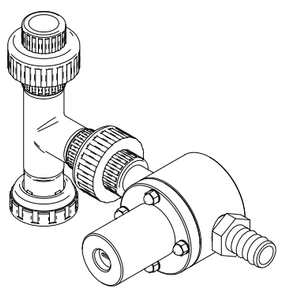

**SYSTEM DISCHARGE P.R.V. HEADER**
**PN: 1103633**

PROMINENT METERING PUMP
MECHANICALLY ACTUATED DIAPHRAGM TYPE
MODEL: S2CBH07220PVTS070UD11001EN
FLOW: 271 LPH (71.6 USGPH)
PRESSURE: 102 PSIG (7 BAR) -MAX.
SUCTION LIFT: 16ft (5m)
LIQUID END MATERIAL: PVDF/PTFE
TYP. X2
PN: 1103562

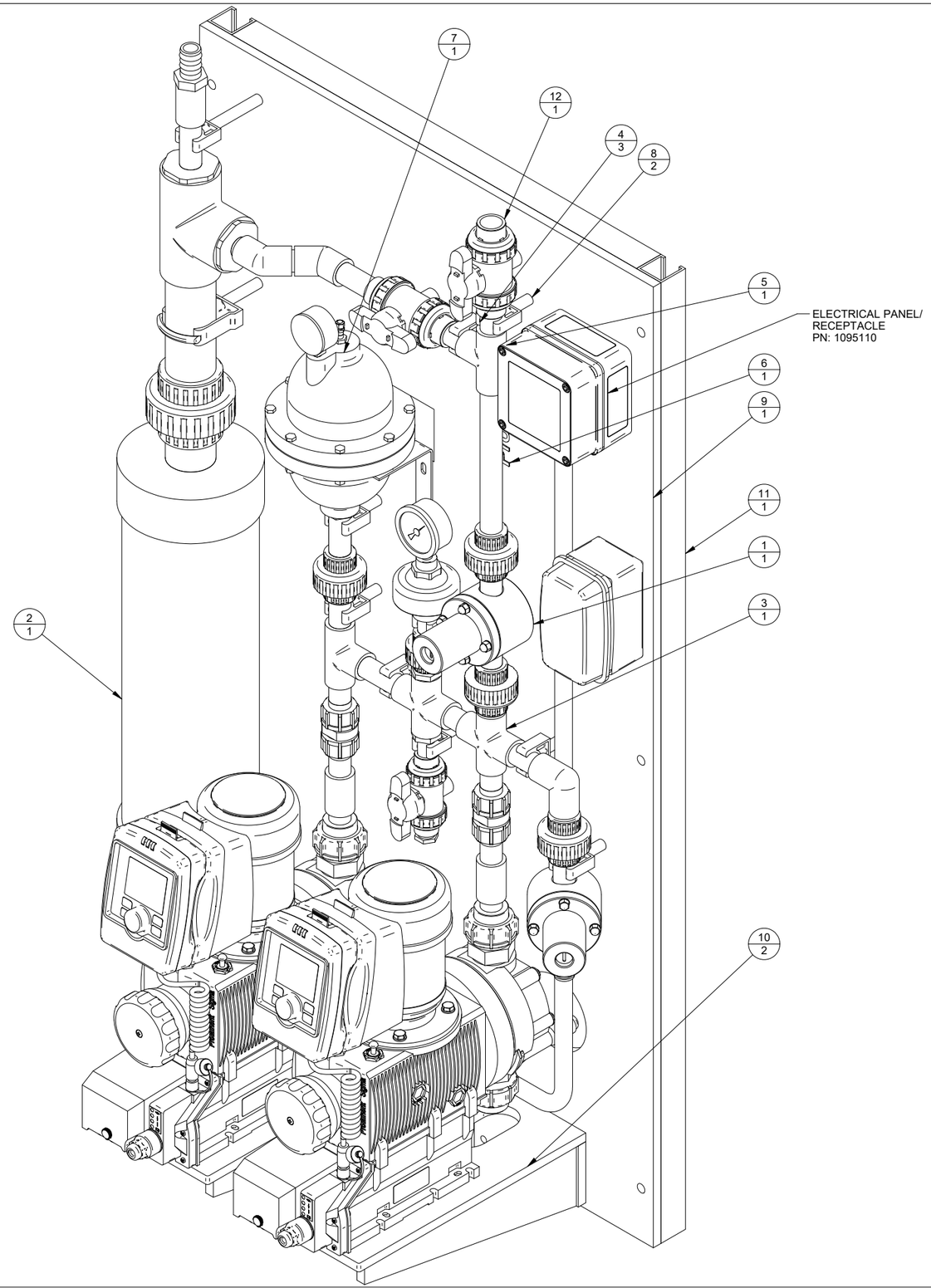


NOTES:

1. ALL PIPING CONNECTIONS ARE 1/2" & 3/4" SCHEDULE 80 PVC SOCKETWELD UNLESS OTHERWISE REQUIRED BY PIPELINE DEVICES.

2. SEAL MATERIAL IS PTFE AND VITON UNLESS OTHERWISE SPECIFIED.

3. SYSTEM DESIGNED TO ACCOMMODATE SIGMA MOTOR DRIVEN PUMPS ONLY.

4. PIPE SUPPORT FRAME IS MADE FROM 1/2" THICK HDPE SHEET & PVC STRUT. FRAME SUPPORT IS MADE BY BOLTED CONSTRUCTION.

5. ALL MOUNTING HARDWARE IS 304SS. ALL PIPE CLIPS AND STANDOFFS ARE PLASTIC.

6. CHARGING PRESSURE OF THE PULSATION DAMPENERS TO BE AT 80% OF THE DISCHARGE LINE OPERATING PRESSURE.

7. ALL INTERCONNECTING PIPE & FITTINGS, HARDWARE, GASKETS, SEALS AND WIRING ARE DONE ON SITE BY OTHERS. SHIPPED LOOSE MATERIALS ARE LISTED ON B.O.M. - INSTALLATION IS BY OTHERS.

8. ALL INTERCONNECTING PIPING SHALL BE FULLY & INDEPENDENTLY SUPPORTED BY OTHERS.

9. TOLERANCE ON ALL TERMINATION POINTS IS +/- 3/8" (10mm) UNLESS SPECIFIED BY CUSTOMER.

10. APPROX. SHIPPING WEIGHT: 145 Lb (66 Kg)
APPROX. OPERATING WEIGHT: 155 Lb (70 Kg)

11. SYSTEM IS FOR INDOOR INSTALLATION ONLY.

12. SHIP LOOSE SYSTEM DISCHARGE P.R.V. HEADER, INSTALLED ON SITE BY OTHERS.

13. DESIGN NOTES:

- DESIGN TEMPERATURE: MAX: 86ºF (30ºC), MIN: 32ºF (0ºC)

UPSTREAM INJECTION PUMP-SUCTION:

- DESIGN PRESSURE: 14.5 PSIG (100kPa)
- MIN. TEST PRESSURE: 25 PSIG (172kPa)

DOWNSTREAM INJECTION PUMP-DISCHARGE:

- DESIGN PRESSURE: 150 PSIG (1034 kPa) MAX
- MIN. TEST PRESSURE: 150 PSIG (1034 kPa)

TESTING CONDITION:

- TEST TYPE: HYDROSTATIC
- TEST MEDIUM: WATER
- TEST TEMPERATURE: AMBIENT 68ºF (20ºC)
- TEST DURATION: 10 MIN. (MINIMUM)

CORROSION ALLOWANCE: 0.0" (0.0mm).

| REV | DATE: YY/MM/DD | DESCRIPTION | BY | APPD | REVD |
|---|---|---|---|---|---|
| 3 | 2019/11/08 | CHANGED PUMP TO SIGMA X & PUMP IDENT-CODE ISSUED FOR CONSTRUCTION | RS | -- | |
| 2 | 2019/05/02 | ADDED SHIP LOOSE DISCHARGE HEADER INITIAL RELEASE | RS | WS | |
| 1 | 2019/02/07 | ADDED SHIP LOOSE MATERIALS INITIAL RELEASE | RS | WS | |

REVISIONS

CUSTOMER
SUEZ WATER TECHNOLOGIES & SOLUTIONS

SUBJECT

PFC PROSIP No 1093737
PURCHASE ORDER No --
PURCHASER'S EQUIP. No SWTS-P2-MDW-PV-0075-B

TITLE SUEZ PROSIP-MW 3/4" PVC-VITON, 2 PUMP - BILL OF MATERIALS -

THIS DRAWING IS THE PROPERTY OF PROMINENT FLUID CONTROLS LTD. AND SHALL NOT BE COPIED OR TRANSFERRED WITHOUT THE WRITTEN CONSENT OF PROMINENT FLUID CONTROLS LTD.

ENGINEERS SEAL

ProMinent®
THE PROMINENT GROUP OF COMPANIES

GUELPH - ONTARIO - CANADA

PROMINENT FLUID CONTROLS LTD.
490 SOUTHGATE DRIVE.
GUELPH, ONTARIO, CANADA
N1H 6J3
TEL. 519 836 5692 FAX. 519 836 5226

PROMINENT FLUID CONTROLS LTD.
RIDC PARK WEST
136 INDUSTRY DRIVE,
PITTSBURGH P.A., USA. 15275
TEL. 412 787 2484 FAX. 412 787 0704

| | | | |
|---|---|---|---|
| DESIGNED | RS | APPROVED | |
| DRAWN | RS | SCALE | NTS |
| CHECKED | -- | DATE | 2018/12/07 |

SHEET: 2/2

| CUSTOMER DWG No | PFC DWG No | REV |
|---|---|---|
| WTS-2P-MD-PVW-0075-A | 1096041-200 | 3 |

PN: 1096042

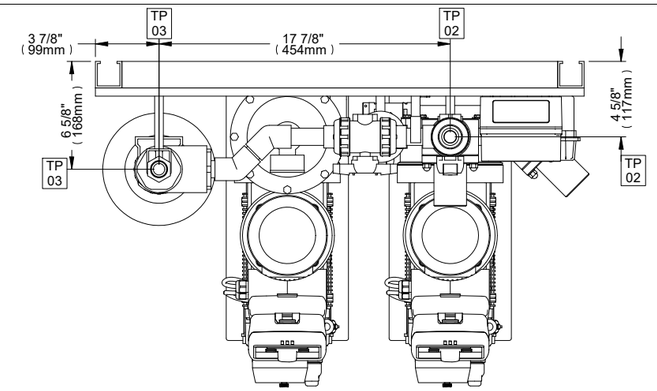


| TERMINATION POINT SCHEDULE | | |
|---|---|---|
| TP | SERVICE | CONNECTION |
| 01A, 01B | SUCTION/INLET | 3/4" TUBE / FOOT VALVE |
| 02 | DISCHARGE/OUTLET | 3/4" SW OR FNPT, PVC |
| 03 | CALIBRATION COLUMN VENT BACK TO TANK | 3/4" TUBE, PVC |
| 04 | PRESSURE RELIEF VALVE VENT BACK TO SAFE LOCATION | 3/4" TUBE, PVC |
| 05 | CALIBRATION COLUMN DRAIN BACK TO TANK | 3/4" TUBE, PVC |

PROMINENT METERING PUMP
MECHANICALLY ACTUATED DIAPHRAGM TYPE
MODEL: S2CBH07220PVTS070UD11001EN
FLOW: 271 LPH (71.6 USGPH)
PRESSURE: 102 PSIG (7 BAR) -MAX.
SUCTION LIFT: 16ft (5m)
LIQUID END MATERIAL: PVDF/PTFE
TYP. X2
PN: 1103562

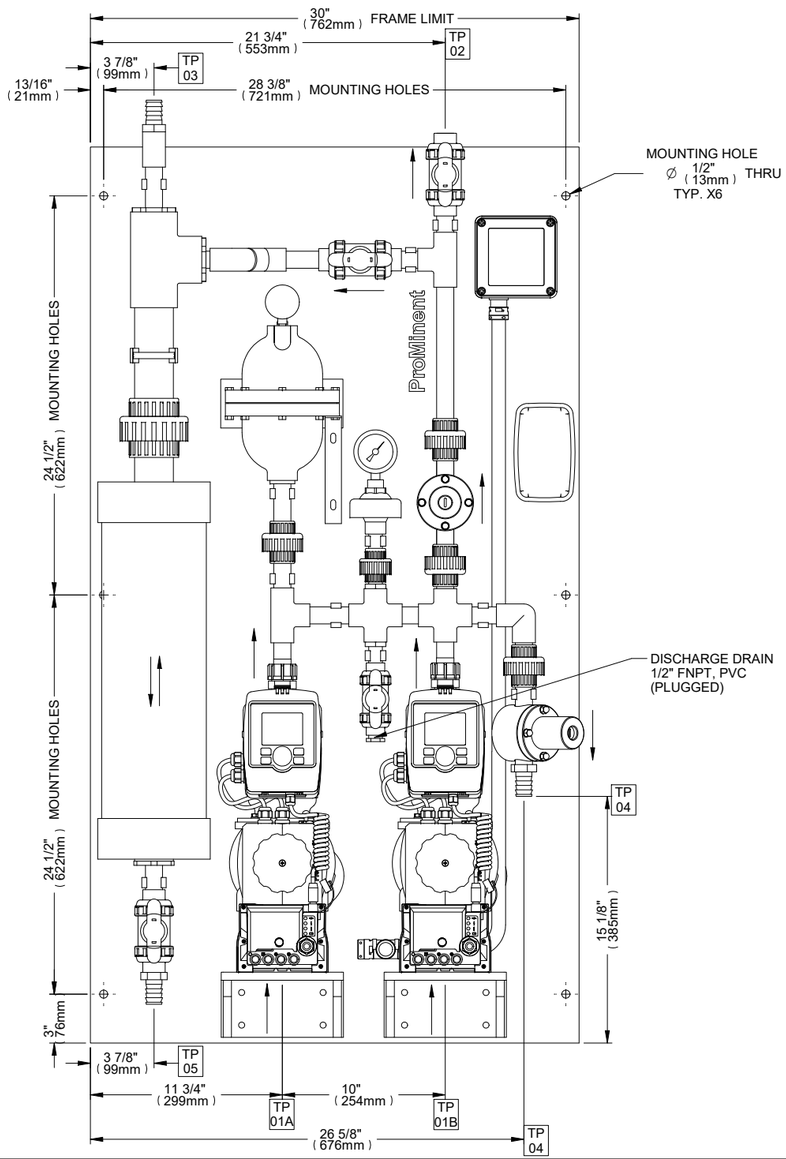


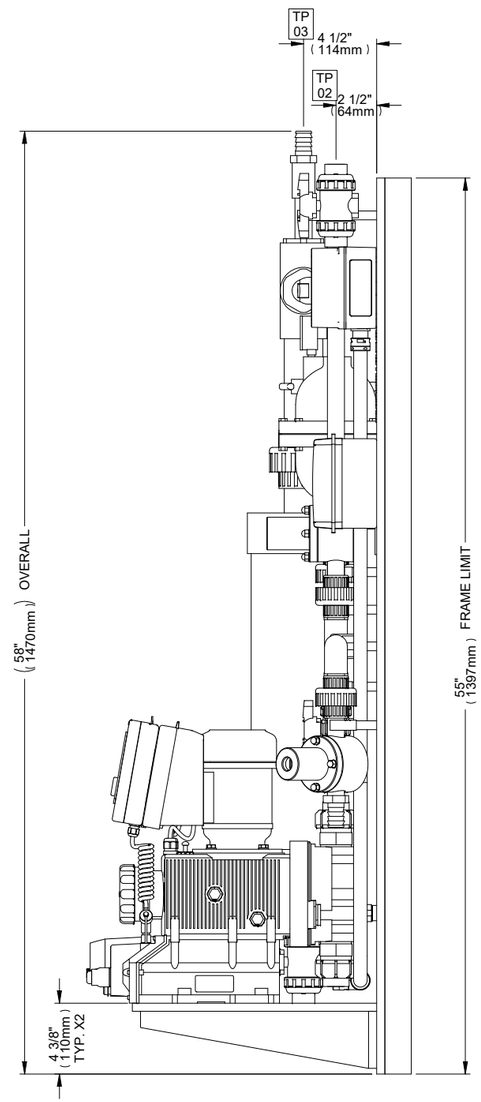


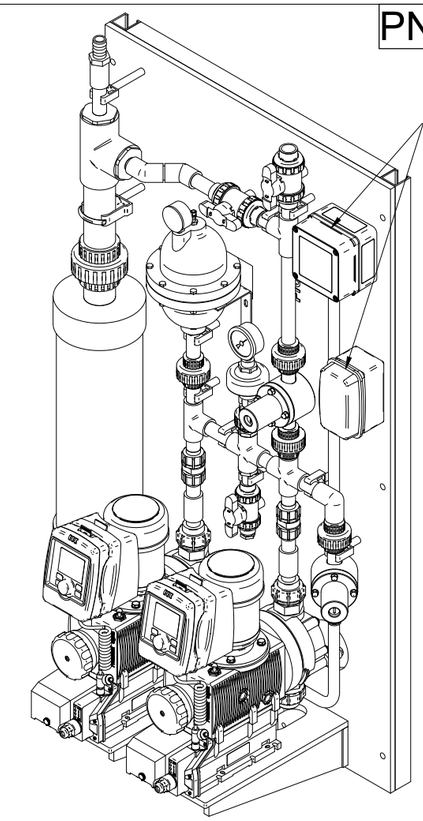


| REV | DATE: YY/MM/DD | DESCRIPTION | BY | APPD | REVD |
|---|---|---|---|---|---|
| 3 | 2019/11/08 | CHANGED PUMP TO SIGMA X & PUMP IDENT-CODE ISSUED FOR CONSTRUCTION | RS | -- | |
| 2 | 2019/05/02 | ADDED SHIP LOOSE DISCHARGE HEADER INITIAL RELEASE | RS | WS | |
| 1 | 2019/02/08 | ADDED SHIP LOOSE MATERIALS INITIAL RELEASE | RS | WS | |

REVISIONS

CUSTOMER
SUEZ WATER TECHNOLOGIES & SOLUTIONS

SUBJECT

PFC PROSIP No 1093733
PURCHASE ORDER No --
PURCHASER'S EQUIP. No SWTS-P2-MDW-PE-0075-B

TITLE
# SUEZ PROSIP-MW 3/4" PVC-EPDM, 2 PUMP - GENERAL ARRANGEMENT -

THIS DRAWING IS THE PROPERTY OF PROMINENT FLUID CONTROLS LTD. AND SHALL NOT BE COPIED OR TRANSFERRED WITHOUT THE WRITTEN CONSENT OF PROMINENT FLUID CONTROLS LTD.

ENGINEERS SEAL

ProMinent®
THE PROMINENT GROUP OF COMPANIES

GUELPH - ONTARIO - CANADA

PROMINENT FLUID CONTROLS LTD.
490 SOUTHGATE DRIVE.
GUELPH, ONTARIO, CANADA
N1H 6J3
TEL. 519 836 5692 FAX. 519 836 5226

PROMINENT FLUID CONTROLS LTD.
RIDC PARK WEST
136 INDUSTRY DRIVE,
PITTSBURGH P.A., USA. 15275
TEL. 412 787 2484 FAX. 412 787 0704

| | | | |
|---|---|---|---|
| DESIGNED | RS | APPROVED | |
| DRAWN | RS | SCALE | NTS |
| CHECKED | WS | DATE | 2018/12/12 |

SHEET: 1/2

CUSTOMER DWG No WTS-2P-MD-PEW-0075-A
PFC DWG No 1096042-200
REV 3

PN: 1096042

COMPONENTS CHART

1 TOP SIDE = CHART NUMBER
2 BOTTOM SIDE = QUANTITY NUMBER

| Item Number | Document Number | Title | Quantity |
|---|---|---|---|
| 1 | 1093736 | BACK PRESSURE VALVE ASSEMBLY WALL MOUNT, 3/4" PVC-EPDM | 1 |
| 2 | 1093734 | CALIBRATION COLUMN ASSEMBLY, WALL MOUNT, 3/4" PVC-EPDM, 10000mL | 1 |
| 3 | 1082757 | DISCHARGE HEADER, PROSIP MF-W, 3/4" PVC, EPDM | 1 |
| 4 | 7741471 | FITTING: PIPE, 3/4", PVC, SCH 80 | 3FT |
| 5 | 7741483 | FITTING: TEE 3/4", SxSxS, PVC, SCH 80 | 1 |
| 6 | 7900317 | LABEL: PROMINENT LABEL, WHITE & ORANGE x 1" | 1 |
| 7 | 1082741 | PULSATION DAMPENER ASSEMBLY, 3/4" PVC-EPDM, 1397mL (85 cu. in.) | 1 |
| 8 | 7741462 | SUPPORT: 3/4" (25mm) PIPE CLIP with 1/4" x 1-1/4" LONG PVC PIPE STANDOFF | 2 |
| 9 | 1076215 | SUPPORT: BACKBOARD 30" x 55" x 1/2" HDPE SHEET | 13FT^2 |
| 10 | 1093743 | SUPPORT: PUMP SHELF, ONE PUMP, WALL MOUNT, 1/2"-3/4" PIPE, MOTOR PUMPS, POLYETHYLENE | 2 |
| 11 | 7904309 | SUPPORT: UNISTRUT PVC 1-5/8" x 1-5/8" | 13FT |
| 12 | 7152163 | VALVE: 3/4" BALL VALVE, PVC/EPDM, TYPE 21 (SOCKET & THREADED ENDS) CHEMLINE | 1 |

**SHIP LOOSE PARTS:**

HOSE BARB, 3/4" SPIG x 3/4" TUBE, PVC - 1083230 - 2PCS
HOSE BARB, DN15 x 3/4" TUBE, PVC - 811407 - 2PCS
FOOT VALVE 3/4" PVC-EPDM - 7903027- 2PCS
3/4" BRAIDED TUBE - 7037041- 12FT
HOSE CLAMP 3/8"-1" - 1059963 - 4PC
(FOR PUMP SUCTION INLET/S)
3/4" BRAIDED TUBE - 7037041- 10FT
HOSE CLAMP 3/8"-1" - 1059963 - 1PC
(FOR P.R.V. VENT LINE)
BACK PRESSURE/PRESSURE RELIEF VALVE 3/4" SW, PVC - 1019885 - 1PC
Y-STRAINER 3/4" SW, PVC/EPDM - 7900295 - 1PC
CHECK VALVE 3/4" SW, PVC/EPDM - 7901354- 1PC

SHIP LOOSE HEADER

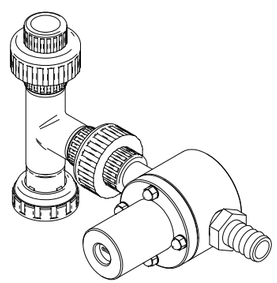

**SYSTEM DISCHARGE P.R.V. HEADER**
**PN: 1103632**

PROMINENT METERING PUMP
MECHANICALLY ACTUATED DIAPHRAGM TYPE
MODEL: S2CBH07220PVTS070UD11001EN
FLOW: 271 LPH (71.6 USGPH)
PRESSURE: 102 PSIG (7 BAR) -MAX.
SUCTION LIFT: 16ft (5m)
LIQUID END MATERIAL: PVDF/PTFE
TYP. X2
PN: 1103562

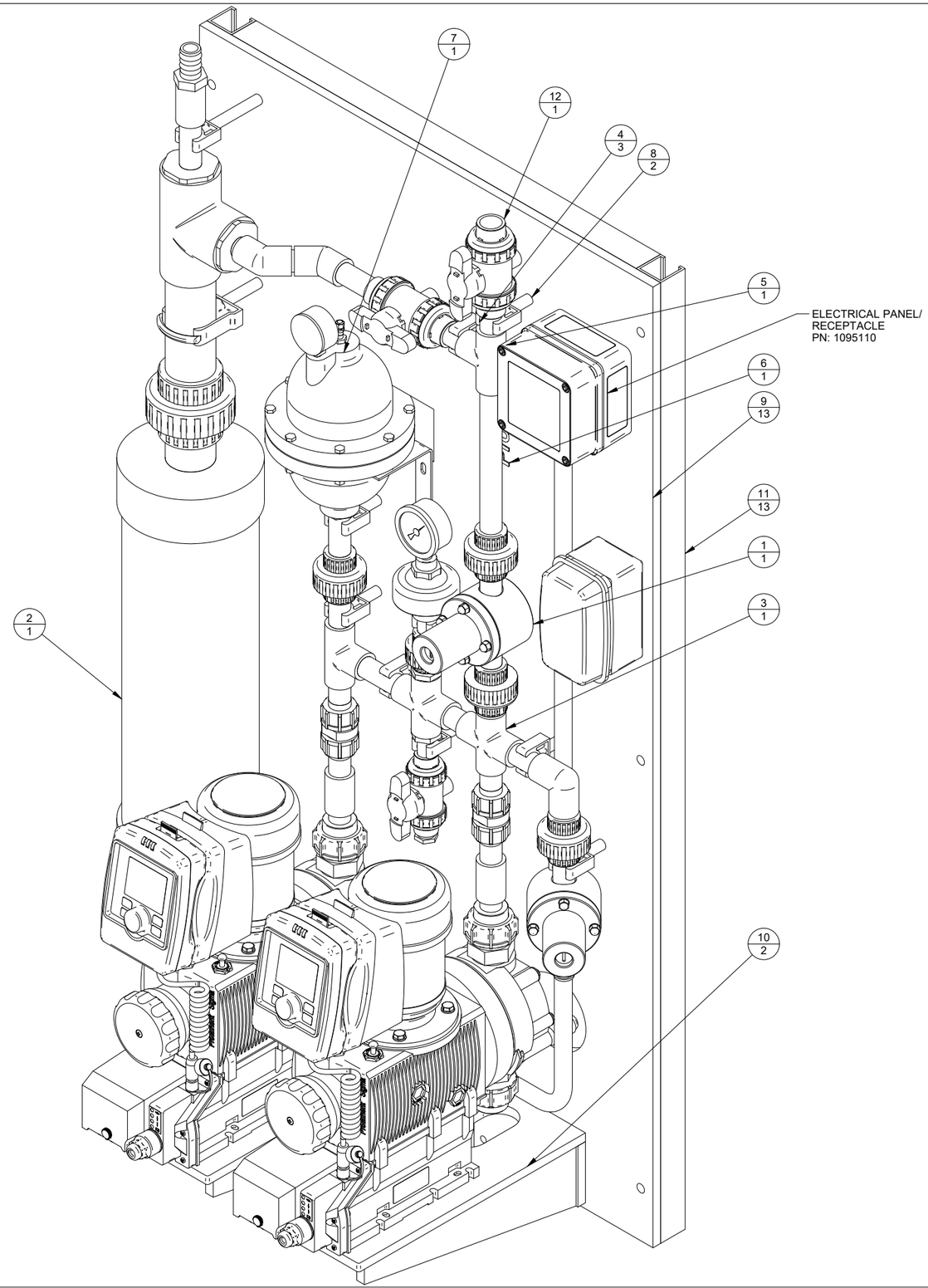


NOTES:

1. ALL PIPING CONNECTIONS ARE 1/2" & 3/4" SCHEDULE 80 PVC SOCKETWELD UNLESS OTHERWISE REQUIRED BY PIPELINE DEVICES.

2. SEAL MATERIAL IS PTFE AND EPDM UNLESS OTHERWISE SPECIFIED.

3. SYSTEM DESIGNED TO ACCOMMODATE SIGMA MOTOR DRIVEN PUMPS ONLY.

4. PIPE SUPPORT FRAME IS MADE FROM 1/2" THICK HDPE SHEET & PVC STRUT. FRAME SUPPORT IS MADE BY BOLTED CONSTRUCTION.

5. ALL MOUNTING HARDWARE IS 304SS. ALL PIPE CLIPS AND STANDOFFS ARE PLASTIC.

6. CHARGING PRESSURE OF THE PULSATION DAMPENERS TO BE AT 80% OF THE DISCHARGE LINE OPERATING PRESSURE.

7. ALL INTERCONNECTING PIPE & FITTINGS, HARDWARE, GASKETS, SEALS AND WIRING ARE DONE ON SITE BY OTHERS. SHIPPED LOOSE MATERIALS ARE LISTED ON B.O.M. - INSTALLATION IS BY OTHERS.

8. ALL INTERCONNECTING PIPING SHALL BE FULLY & INDEPENDENTLY SUPPORTED BY OTHERS.

9. TOLERANCE ON ALL TERMINATION POINTS IS +/- 3/8" (10mm) UNLESS SPECIFIED BY CUSTOMER.

10. APPROX. SHIPPING WEIGHT: 145 Lb (66 Kg)
APPROX. OPERATING WEIGHT: 155 Lb (70 Kg)

11. SYSTEM IS FOR INDOOR INSTALLATION ONLY.

12. SHIP LOOSE SYSTEM DISCHARGE P.R.V. HEADER, INSTALLED ON SITE BY OTHERS.

13. DESIGN NOTES:

- DESIGN TEMPERATURE: MAX: 86ºF (30ºC), MIN: 32ºF (0ºC)

UPSTREAM INJECTION PUMP-SUCTION:

- DESIGN PRESSURE: 14.5 PSIG (100kPa)
- MIN. TEST PRESSURE: 25 PSIG (172kPa)

DOWNSTREAM INJECTION PUMP-DISCHARGE:

- DESIGN PRESSURE: 150 PSIG (1034 kPa) MAX
- MIN. TEST PRESSURE: 150 PSIG (1034 kPa)

TESTING CONDITION:

- TEST TYPE: HYDROSTATIC
- TEST MEDIUM: WATER
- TEST TEMPERATURE: AMBIENT 68ºF (20ºC)
- TEST DURATION: 10 MIN. (MINIMUM)

CORROSION ALLOWANCE: 0.0" (0.0mm).

| REV | DATE: YY/MM/DD | DESCRIPTION | BY | APPD | REVD |
|---|---|---|---|---|---|
| 3 | 2019/11/08 | CHANGED PUMP TO SIGMA X & PUMP IDENT-CODE ISSUED FOR CONSTRUCTION | RS | -- | |
| 2 | 2019/05/02 | ADDED SHIP LOOSE DISCHARGE HEADER INITIAL RELEASE | RS | WS | |
| 1 | 2019/02/08 | ADDED SHIP LOOSE MATERIALS INITIAL RELEASE | RS | WS | |

REVISIONS

CUSTOMER
SUEZ WATER TECHNOLOGIES & SOLUTIONS

SUBJECT
PFC PROSIP No 1093733
PURCHASE ORDER No --
PURCHASER'S EQUIP. No SWTS-P2-MDW-PE-0075-B

TITLE SUEZ PROSIP-MW 3/4" PVC-EPDM, 2 PUMP - BILL OF MATERIALS -

THIS DRAWING IS THE PROPERTY OF PROMINENT FLUID CONTROLS LTD. AND SHALL NOT BE COPIED OR TRANSFERRED WITHOUT THE WRITTEN CONSENT OF PROMINENT FLUID CONTROLS LTD.

ENGINEERS SEAL

ProMinent®
THE PROMINENT GROUP OF COMPANIES

GUELPH - ONTARIO - CANADA

PROMINENT FLUID CONTROLS LTD.
490 SOUTHGATE DRIVE.
GUELPH, ONTARIO, CANADA
N1H 6J3
TEL. 519 836 5692 FAX. 519 836 5226

PROMINENT FLUID CONTROLS LTD.
RIDC PARK WEST
136 INDUSTRY DRIVE,
PITTSBURGH P.A., USA. 15275
TEL. 412 787 2484 FAX. 412 787 0704

| | | | |
|---|---|---|---|
| DESIGNED | RS | APPROVED | |
| DRAWN | RS | SCALE | NTS |
| CHECKED | WS | DATE | 2018/12/12 |

SHEET: 2/2

| CUSTOMER DWG No | PFC DWG No | REV |
|---|---|---|
| WTS-2P-MD-PEW-0075-A | 1096042-200 | 3 |

# ProMinent® Sigma/2 Motor-Driven Metering Pumps

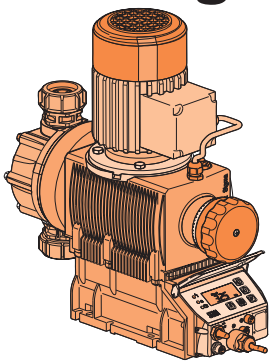

Diaphragm Type Control Version (S2Ca HM)

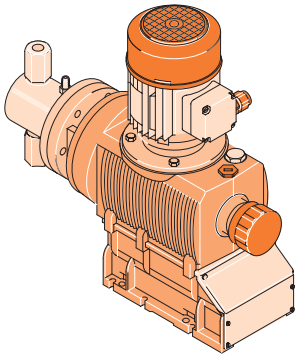

Packed-Plunger Type Basic Version (S2Ba HK) (with motor)

## Sigma/2 Metering Pumps

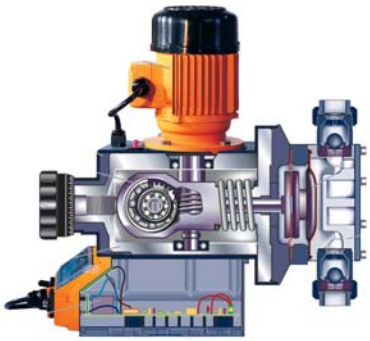

The ProMinent Sigma/2 series is a motor driven metering pump with a mechanically actuated diaphragm-type liquid end (Sigma HM) or a packed plunger-type liquid end (Sigma HK). It is constructed of a rugged metal inner casing for components subjected to mechanical stress, and a corrosion resistant plastic outer housing. The standard materials for the liquid end are PVDF or 316 stainless steel, both with PTFE seals.

Sigma/2 HM pumps are designed with a convex DEVELOPAN diaphragm which seals to a concave curve in the liquid end. This allows for precise metering of media with various viscosities and reduces stress for long diaphragm life. Three gear ratios and two liquid end sizes provide maximum capacities ranging from 15.2 to 111 gph (57 to 420 L/h) (basic) and 15.2 to 92.5 gph (57 to 350 L/h) (control) at maximum backpressures of 174 to 58 psig (12 to 4 bar). The capacity can be infinitely varied in steps of 0.5% by adjustment of the self-locking stroke length adjusting knob or via an optional stroke positioning motor. Maximum stroke length is 0.19 (5mm). Under defined conditions and with correct installation, the repeatability is better than ± 2% in the stroke length range of between 30 - 100%.

Sigma/2 HK pumps offer three gear ratios and four liquid end sizes for maximum capacities ranging from 0.6 to 20.1 gph (2.3 to 76 L/h) (basic) or 0.6 to 17.2 gph (2.3 to 65.2 L/h) (control) at maximum backpressures of 4640 to 174 psig (320 to 12 bar). The capacity can be infinitely varied in steps of 0.2% by adjustment of the self-locking stroke length adjusting knob or via an optional stroke positioning motor. Maximum stroke length is 0.6 (15mm). Under defined conditions and with correct installation, the repeatability is better than ± 1% in the stroke length range of between 30 - 100%.

## Control Versions

**Basic type**

The Sigma/2 basic version (S2Ba) does not include internal electronics or a motor. Any NEMA 56 C 1750 RPM motor can be supplied including explosion-proof or inverter duty AC motors. The Sigma/2 uses a 1/3 HP DC single or 3-phase AC motor.

The pump may be operated manually by adjusting the stroke length knob (displacement per stroke). Automatic control of displacement per stroke via a 4-20 mA analog or 3P signal is possible with an optional servomotor. Control of stroke frequency via analog signal is possible with variable speed drives (DC/SCR or AC inverter).

**Control type**

The Sigma/2 microprocessor controlled metering pump (S2Ca) is supplied with an integral TEFC motor. Pump settings are programmable and viewed on an illuminated LCD. Functions include stroke frequency, batch delivery and external control by pulse or analog signal.

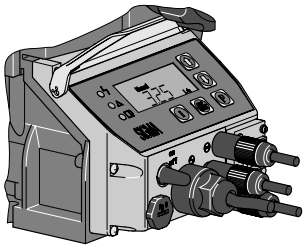

pk-2-104

CE Approved

Available (standard in Canada)

The Sigma/2 control version features information displays for flow rate (in gph or l/h) and totalized flow (gallons or litres); accumulative stroke count with clear/reset capabilities; and stroke length adjustment displayed in increments of 1%. Three LED lights indicate operating status. Options include a programmable access code, flow monitoring, fault and pacing relays, calibration, timer and 4-20 mA output.

ProMinent®

# Technical Data: Sigma/2 HM Diaphragm Pumps

## Sigma/2 Basic Version

| Technical data: | 60 Hz (1750 RPM) operation Capacity at Maximum Pressure | | | | Max. Stroke Rate | Output per Stroke | Max. Suction Lift (water) | | Max. Suction Pressure | | Suction/ Discharge Connector | | Shipping Weight w/Motor | |
|---|---|---|---|---|---|---|---|---|---|---|---|---|---|---|
| Pump Version S2Ba HM | psig | (bar) | U.S. GPH | (L/h) | Stroke/ min. | mL/ stroke | ft. | (m) | psig | (bar) | DN | in. | lbs. | (kg.) |
| 12050 PVT | 145 | (10) | 15.9 | (60) | 87 | 11.4 | 23 | (7) | 44 | (3) | 15 | 1/2 MNPT | 33 | (15) |
| 12050 SST | 174 | (12) | 15.2 | (57) | 87 | 11.4 | 23 | (7) | 44 | (3) | 15 | 1/2 FNPT | 44 | (20) |
| 12090 PVT | 145 | (10) | 28.5 | (108) | 156 | 11.4 | 23 | (7) | 44 | (3) | 15 | 3/4 MNPT | 33 | (15) |
| 12090 SST | 174 | (12) | 27 | (103) | 156 | 11.4 | 23 | (7) | 44 | (3) | 15 | 1/2 FNPT | 44 | (20) |
| 12130 PVT | 145 | (10) | 41 | (156) | 232 | 10.9 | 23 | (7) | 44 | (3) | 15 | 3/4 MNPT | 33 | (15) |
| 12130 SST | 174 | (12) | 39.6 | (150) | 232 | 10.9 | 23 | (7) | 44 | (3) | 15 | 1/2 FNPT | 44 | (20) |
| 07120 PVT | 100 | (7) | 38 | (144) | 87 | 27.4 | 16 | (5) | 15 | (1) | 25 | 3/4 MNPT | 35 | (16) |
| 07120 SST | 100 | (7) | 38 | (144) | 87 | 27.4 | 16 | (5) | 15 | (1) | 25 | 3/4 MNPT | 53 | (24) |
| 07220 PVT | 100 | (7) | 69.7 | (264) | 156 | 27.7 | 16 | (5) | 15 | (1) | 25 | 3/4 MNPT | 35 | (16) |
| 07220 SST | 100 | (7) | 69.7 | (264) | 156 | 27.7 | 16 | (5) | 15 | (1) | 25 | 3/4 MNPT | 53 | (24) |
| 04350 PVT | 58 | (4) | 111 | (420) | 232 | 29.4 | 16 | (5) | 15 | (1) | 25 | 1 MNPT | 35 | (16) |
| 04350 SST | 58 | (4) | 111 | (420) | 232 | 29.4 | 16 | (5) | 15 | (1) | 25 | 1 MNPT | 53 | (24) |

## Sigma/2 Control Version

| Technical data: | 60 Hz operation Capacity at Maximum Pressure | | | | Max. Stroke Rate | Output per Stroke | Max. Suction Lift (water) | | Max. Suction Pressure | | Suction/ Discharge Connector | | Shipping Weight w/Motor | |
|---|---|---|---|---|---|---|---|---|---|---|---|---|---|---|
| Pump Version S2Ca HM | psig | (bar) | U.S. GPH | (L/h) | Stroke/ min. | mL/ stroke | ft. | (m) | psig | (bar) | DN | in. | lbs. | (kg.) |
| 12050 PVT | 145 | (10) | 15.9 | (60) | 90 | 11.4 | 23 | (7) | 44 | (3) | 15 | 1/2 MNPT | 33 | (15) |
| 12050 SST | 174 | (12) | 15.9 | (60) | 90 | 11.4 | 23 | (7) | 44 | (3) | 15 | 1/2 FNPT | 44 | (20) |
| 12090 PVT | 145 | (10) | 28.5 | (108) | 160 | 11.4 | 23 | (7) | 44 | (3) | 15 | 3/4 MNPT | 33 | (15) |
| 12090 SST | 174 | (12) | 28.5 | (108) | 160 | 11.4 | 23 | (7) | 44 | (3) | 15 | 1/2 FNPT | 44 | (20) |
| 12130 PVT | 145 | (10) | 34.3 | (130) | 200 | 10.9 | 23 | (7) | 44 | (3) | 15 | 3/4 MNPT | 33 | (15) |
| 12130 SST | 174 | (12) | 34.3 | (130) | 200 | 10.9 | 23 | (7) | 44 | (3) | 15 | 1/2 FNPT | 44 | (20) |
| 07120 PVT | 100 | (7) | 38 | (144) | 90 | 27.4 | 16 | (5) | 15 | (1) | 25 | 3/4 MNPT | 35 | (16) |
| 07120 SST | 100 | (7) | 38 | (144) | 90 | 27.4 | 16 | (5) | 15 | (1) | 25 | 3/4 MNPT | 53 | (24) |
| 07220 PVT | 100 | (7) | 69.7 | (264) | 160 | 27.7 | 16 | (5) | 15 | (1) | 25 | 3/4 MNPT | 35 | (16) |
| 07220 SST | 100 | (7) | 69.7 | (264) | 160 | 27.7 | 16 | (5) | 15 | (1) | 25 | 3/4 MNPT | 53 | (24) |
| 04350 PVT | 58 | (4) | 92.5 | (350) | 200 | 29.4 | 16 | (5) | 15 | (1) | 25 | 1 MNPT | 35 | (16) |
| 04350 SST | 58 | (4) | 92.5 | (350) | 200 | 29.4 | 16 | (5) | 15 | (1) | 25 | 1 MNPT | 53 | (24) |

## Wetted Materials of Contruction

| Material Code | Liquid end | Suction/Discharge Connectors | Seals** | Balls |
|---|---|---|---|---|
| PVT | PVDF (Polyvinylidene fluoride) | PVDF (Polyvinylidene fluoride) | PTFE/ Viton® | Alumina Ceramic/glass* |
| SST | 316 Stainless steel | 316 Stainless steel | PTFE/ Viton® | SS |

Note: * For versions 07120, 07220, 04350
** EPDM/Viton® also available

# Technical Data: Sigma/2 HK Plunger Pumps

ProMinent®

## Sigma/2 HK Basic Version

| Technical data: | 60 Hz (1750 RPM) operation Capacity at Maximum Pressure | | | | Max. Stroke Rate | Output per Stroke | Max. Suction Lift (water) | | Max. Suction Pressure | | Suction/ Discharge Connector | Shipping Weight w/Motor | |
|---|---|---|---|---|---|---|---|---|---|---|---|---|---|
| Pump Version Sigma/2B HK | psig | (bar) | U.S. GPH | (L/h) | Stroke/ min. | mL/ stroke | ft. | (m) | psig | (bar) | in. FNPT (G) | lbs. | (kg.) |
| 32002 SST | 4640 | (320) | 0.6 | (2.3) | 84 | 0.46 | 16 | (5) | 2175 | (150) | 1/4 | 53 | (24) |
| 23004 SST | 3335 | (230) | 1.2 | (4.8) | 153 | 0.52 | 16 | (5) | 2175 | (150) | 1/4 | 53 | (24) |
| 10006 SST | 1450 | (100) | 2.0 | (7.6) | 233 | 0.55 | 16 | (5) | 2175 | (150) | 1/4 | 53 | (24) |
| 14006 SST | 2030 | (140) | 1.8 | (7.1) | 84 | 1.42 | 13 | (4) | 870 | (60) | 1/4 | 53 | (24) |
| 10011 SST | 1450 | (100) | 3.4 | (13.1) | 153 | 1.43 | 13 | (4) | 870 | (60) | 1/4 | 53 | (24) |
| 05016 SST | 725 | (50) | 5.2 | (20) | 233 | 1.43 | 13 | (4) | 870 | (60) | 1/4 | 53 | (24) |
| 07012 SST | 1015 | (70) | 3.9 | (14.8) | 84 | 2.90 | 13 | (4) | 435 | (30) | 1/4 | 53 | (24) |
| 04522 SST | 652 | (45) | 7.0 | (27.6) | 153 | 2.91 | 13 | (4) | 435 | (30) | 1/4 | 53 | (24) |
| 02534 SST | 363 | (25) | 10.7 | (40.8) | 233 | 2.92 | 13 | (4) | 435 | (30) | 1/4 | 53 | (24) |
| 04022 SST | 580 | (40) | 7.0 | (26.5) | 84 | 5.26 | 13 | (4) | 218 | (15) | 3/8 | 55 | (25) |
| 02541 SST | 363 | (25) | 13.0 | (49.2) | 153 | 5.37 | 13 | (4) | 218 | (15) | 3/8 | 55 | (25) |
| 01264 SST | 174 | (12) | 20.1 | (76) | 233 | 5.45 | 13 | (4) | 218 | (15) | 3/8 | 55 | (25) |

## Sigma/2 HK Control Version

| Technical data: | 60 Hz operation Capacity at Maximum Pressure | | | | Max. Stroke Rate | Output per Stroke | Max. Suction Lift (water) | | Max. Suction Pressure | | Suction/ Discharge Connector | Shipping Weight w/Motor | |
|---|---|---|---|---|---|---|---|---|---|---|---|---|---|
| Pump Version Sigma/2C HK | psig | (bar) | U.S. GPH | (L/h) | Stroke/ min. | mL/ stroke | ft. | (m) | psig | (bar) | in. FNPT (G) | lbs. | (kg.) |
| 32002 SST | 4640 | (320) | 0.6 | (2.3) | 84 | 0.46 | 16 | (5) | 2175 | (150) | 1/4 | 53 | (24) |
| 23004 SST | 3335 | (230) | 1.2 | (4.8) | 153 | 0.52 | 16 | (5) | 2175 | (150) | 1/4 | 53 | (24) |
| 10006 SST | 1450 | (100) | 1.7 | (6.5) | 200 | 0.55 | 16 | (5) | 2175 | (150) | 1/4 | 53 | (24) |
| 14006 SST | 2030 | (140) | 1.8 | (7.1) | 84 | 1.42 | 13 | (4) | 870 | (60) | 1/4 | 53 | (24) |
| 10011 SST | 1450 | (100) | 3.4 | (13.1) | 153 | 1.43 | 13 | (4) | 870 | (60) | 1/4 | 53 | (24) |
| 05016 SST | 725 | (50) | 4.5 | (17.2) | 200 | 1.43 | 13 | (4) | 870 | (60) | 1/4 | 53 | (24) |
| 07012 SST | 1015 | (70) | 3.9 | (14.8) | 84 | 2.90 | 13 | (4) | 435 | (30) | 1/4 | 53 | (24) |
| 04522 SST | 652 | (45) | 7.0 | (27.6) | 153 | 2.91 | 13 | (4) | 435 | (30) | 1/4 | 53 | (24) |
| 02534 SST | 363 | (25) | 9.2 | (35.0) | 200 | 2.92 | 13 | (4) | 435 | (30) | 1/4 | 53 | (24) |
| 04022 SST | 580 | (40) | 7.0 | (26.5) | 84 | 5.26 | 13 | (4) | 218 | (15) | 3/8 | 55 | (25) |
| 02541 SST | 363 | (25) | 13.0 | (49.2) | 153 | 5.37 | 13 | (4) | 218 | (15) | 3/8 | 55 | (25) |
| 01264 SST | 174 | (12) | 17.3 | (65.4) | 200 | 5.45 | 13 | (4) | 218 | (15) | 3/8 | 55 | (25) |

## Wetted Materials of Construction

| Material Code | Liquid End | Suction/Discharge Connectors | Seals | Valve Balls | Ball Seat |
|---|---|---|---|---|---|
| SST | 316 Stainless steel | 316 Stainless steel | PTFE | Ceramic | SS |

# Technical Data: Sigma/2 HM Diaphragm Pumps

## Diaphragm Failure Indicators

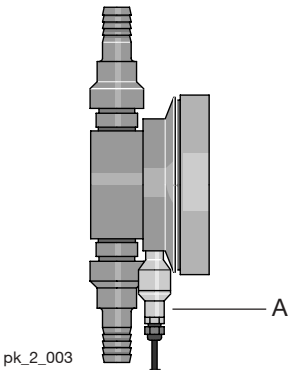


Note: All diaphragm-type motor-driven metering pumps should be installed with a pressure relief valve on the discharge line. See the High-Flow Accessories section of the catalog for pressure relief valves.

### Diaphragm Failure Monitor (A)

As an option, the liquid end can be equipped with diaphragm failure monitor. This consists of a PVDF spacer with leak detector positioned between the primary (fluid side) diaphragm and a hermetically sealed backer diaphragm. A normally closed diaphragm-isolated pressure switch (A) opens upon the increase of pressure resulting from main diaphragm failure, based on minimum backpressure of 21 psig (1.5 bar). This offers the distinct advantage that the metered fluid cannot flow uncontrolled out of the pump. The diaphragm failure is signalled on an LCD display and the pump is stopped on S2Ca models, and triggers the optional fault indicating relay. A contact is opened on S2Ba HM models to allow fault annunciation or to stop the pump.

### Diaphragm Failure Kits

For conversion of a standard Sigma pump to one with diaphragm failure indication. Includes safety diaphragm, backplate, secondary containment diaphragm and hub, leak detection spacer, leak detection pressure switch assembly, diaphragm, pump head bolts.

| | |
|---|---|
| 130 S2Ba (version 12050 - 12130) | 792767 |
| 130 S2Ca (version 12050 - 12130) | 740332 |
| 350 S2Ba (version 07120 - 04350) | 792768 |
| 350 S2Ca (version 07120 - 04350) | 740333 |

# Specifications: Sigma/2

ProMinent®

General:

| | |
|---|---|
| *Maximum stroke length:* | 0.196" (5.0 mm) HM; 0.6" (15 mm) HK |
| *Power cord:* | 6 foot (2 m) 2 wire + ground (supplied on control versions) |
| *Stroke frequency control:* | S2Ba: Constant speed or optional DC/SCR drive or AC inverter<br>S2Ca: Microprocessor control version with innovative start/stop and variable speed control proportional to set frequency or external control signal. |
| *Stroke counting:* | Standard on S2Ca |
| *Materials of construction* | |
| *Inner casing:* | Cast aluminum |
| *Housing:* | Glass-filled Luranyl™ (PPE) |

| *Wetted materials of construction:* | Liquid End: | **PVDF** | **316 SS** |
|---|---|---|---|
| | Suct./Dis. Connectors: | PVDF | 316 SS |
| | Seals: | PTFE/Viton® | PTFE/Viton® |
| | Check Balls: | Glass | SS |
| | Pressure Relief Valves: | PVDF/Viton® O-rings | SS/Viton® O-rings |

| | |
|---|---|
| *Drive:* | Cam and spring-follower (lost motion) |
| *Lubrication:* | Oil lubricated |
| *Recommended oil:* | ISO VG 460, such as Mobil Gear Oil 634; ProMinent Part no. 555325 |
| *Oil quantity:* | Approximately 0.6 quart (550 mL) |
| *Recommended oil change interval:* | 5,000 hours |
| *Warranty:* | Two years on drive, one year on liquid end. |
| *Factory testing:* | Each pump is tested for rated flow at maximum pressure. |
| *Industry Standard:* | CE approved, CSA available (standard in Canada) |

Sigma/2 HM:

| | |
|---|---|
| *Diaphragm materials:* | PTFE faced EPDM with Nylon reinforcement and steel core |
| *Liquid end options:* | Polyvinylidene Fluoride (PVDF) or 316 SS, with PTFE faced Viton® seals |
| *Check valves:* | Single ball check, PVDF and SS versions.<br>Optional springs available (Hastelloy C4) |
| *Repeatability:* | When used according to the operating instructions, better than ±2% |

*Max. fluid operating temperatures:*

| Material | Constant (Max. Backpressure) | Short Term (15 min. @ max.30 psi) |
|---|---|---|
| PVDF | 149½F(65½C) | 212½F(100½C) |
| 316 SS | 194½F(90½C) | 248½F(120½C) |

| | |
|---|---|
| *Diaphragm failure indication:* | Optional, see accessories. Switch is N.C., opens to indicate failure.<br>Switch rated 250 VAC, 0.3 A inductive or 0.5 A resistive; 30 VDC,1.0 A resistive.<br>Requires minimum 21 psig (1.5 bar) backpressure on pump. N.O. switch available upon request. Includes double diaphragm leak prevention. |
| *Separation of drive from liquid end:* | An air gap with secondary safety diaphragm separates the drive from the liquid end to prevent cross contamination of oil and process fluid (with or without optional diaphragm failure indication). |
| *Max. solids size in fluid:* | 0.3 mm |
| *Stroke length adjustment:* | Manual, in increments of 0.5%. Motorized stroke length adjustment available. |

Sigma/2 HK:

| | |
|---|---|
| *Piston materials:* | Ceramic oxide; packing rings of PTFE, packing spring of 316 SS. |
| *Liquid end options:* | 316 SS with PTFE seals |
| *Check valves:* | Double ball, stainless steel; optional springs (Hastelloy C4). |
| *Repeatability:* | When used according to the operating instructions, better than ±0.5% |

*Max. fluid operating temperatures:*

| Material | Constant | Short Term |
|---|---|---|
| 316 SS | 392½F(200½C) | 428½F(220½C) |

| | |
|---|---|
| *Stroke length adjustment:* | Manual, in increments of 0.2%. Motorized stroke length control optional. |

# Specifications cont.

Sigma/2 Basic Version

*Motor mounting flange:* Fits all NEMA 56C frame motors (motor not included with pump)

*Gear ratios and stroke frequencies (with 1725 RPM motor):* 20:1 = 87 SPM, 11:1 = 156 SPM, 7.25:1 = 232 SPM

*Motor coupling:* Flexible coupling included with pump.

*Required Motor HP:* 1/3 HP ( .25 kW)

*Full load RPM:* 1750 RPM (60 Hz)

*Stroke sensor (optional):* Hall effect - requires 5 VDC

Sigma/2 Control Version

*Control Function:* At stroke frequencies equal to or greater than 33%, the integral AC variable frequency drive continuously varies the motor speed in a linear response to the incoming signal. At stroke frequencies less than 33%, the motor starts and stops according to a control algorithm to provide the desired stroke frequency. In the start-stop mode the motor speed is constant at approximately 580 RPM.

*Enclosure rating:* NEMA 3 (IP 55)

*Motor data:* Totally enclosed, fan cooled (IP55); class F insulation; Manufacturer ATB; 0.18 kW (0.24 HP) 230 3 phase (1.9 A)

*Relay load*

*Fault relay only (options 1 & 3):* Contact load: 250 VAC, 2 A, 50/60 Hz
Operating life: > 200,000 switch functions

*Fault and pacing relay (options 4 & 5):* Contact load: 24 V, 2 A, 50/60 Hz
Operating life: > 200,000 switch functions
Residual impedance in ON-position ($R_{DSOn}$): < 8 Ω
Residual current in OFF-position: <1µA
Maximum voltage: 24 VDC
Maximum current: < 100 mA (for pacing relay)
Switch functions: $750 \times 10^6$

Contact closure: 100 ms (for pacing relay)

*Analog output signal:* max. impedance 300 Ω
Isolated 4-20 mA output signal

*Profibus - DP fieldbus options:*

| | |
|---|---|
| Transfer: | RS - 485 |
| Wiring: | 2-wired, twisted, shielded |
| Length: | 3637 ft. (1200 m)/328 ft. (100 m) |
| Baudrate: | 9600 bits/s; 12 Mbits/s |
| No. of participants: | 32 with 127 repeaters |
| Topology: | Line |
| Access procedure: | Master/master with token ring |

*Relay cable (optional):* 6 foot (2 m) 3 wire (SPDT) 250 VAC, 2 A

*Pulse contact/remote pause contact:* With voltage-free contact, or semiconductor sink logic control (not source logic) with a residual voltage of <700 mV. The contact load is approximately 0.5 mA at + 5 VDC. (*Note*: Semiconductor contacts that require >700 mV across a closed contact should not be used).

*Max. pulse frequency:* 25 pulses/sec

*Contact impedance:* 10 kOhm

*Max. pulse memory:* 65,535 pulses

*Necessary contact duration:* 20ms

*Analog - current input burden:* Approximately 120 Ohm

*Max. allowable input current:* 50 mA

*Power requirements:* single phase, 115-230 VAC

# Data required to size metering pumps and accessories

ProMinent®

Complete this data sheet and fax it to ProMinent Pittsburgh at (412) 787-0704 or ProMinent Canada at (519) 836-5226 for a review of the system hydraulics and recommendations on pump and accessory selection.

| | |
|---|---|
| Desired capacity min./max. | GPH (l/h)_____ |
| Available power supply | _____V, _____ Hz, _____ phase |
| Working temperature min./max. | °F (°C)_____ |
| Description of process fluid | _____ |
| Concentration % | _____ |
| Solids content % | _____ |
| Absolute viscosity, cP | _____ |
| Vapor pressure at working temperature | psig (bar) _____ |
| Remarks (e.g. abrasive, developing gases and fumes, flammable, corrosive) | _____<br>_____ |

Suction conditions:

| | |
|---|---|
| Suction lift min./max., or | ft. (m) _____ |
| Positive suction head min./max., or | ft. (m)_____ |
| Pressure in chemical tank | psig (bar)_____ |
| Length of suction line | ft. (m) _____ |
| Size (I.D.) of suction line | in. (mm)_____ |
| Number of valves and fittings in suction line | _____ |

Discharge conditions:

| | |
|---|---|
| Back-pressure min./max. | psig (bar) _____ |
| Discharge head min./max. | ft. (m) _____ |
| Negative discharge head min./max. | ft. (m) _____ |
| Length of discharge line | ft. (m) _____ |
| Size (I.D.) of discharge line | in. (mm)_____ |
| Number of valves and fittings in discharge line | _____ |

System sketch

# Identity code: Basic Version Sigma/2 HM (S2Ba)

S2Ba — Series: Sigma/2 Basic Version a

HM — Main Drive, Diaphragm

Pump version:

| | |
|---|---|
| 12050* | |
| 12090* | |
| 12130* | |
| 07120 | |
| 07220 | |
| 04350 | |

* For PVDF versions, max. 145 psig (10 bar)

Liquid end material:

| | |
|---|---|
| PV | PVDF |
| SS | 316 Stainless steel |

Seal material:

| | |
|---|---|
| T | PTFE/Viton® seal |

Viton® is a registered trademark of DuPont Dow Elastomers

Diaphragm type:

| | |
|---|---|
| 0 | Standard diaphragm |
| 1 | With double diaphragm and failure monitor (NC contact opens on fault) |

Liquid end version:

| | |
|---|---|
| 0 | Without valve springs |
| 1 | With 2 valve springs (Hastelloy C4, 1 psig) |

Connectors:

| | |
|---|---|
| 7 | PVDF clamping nut & insert |
| 8 | SS clamping nut & insert |

Labeling:

| | |
|---|---|
| 0 | Standard with logo |

Motor mount:

| | |
|---|---|
| 2 | Without motor, with NEMA 56C flange |

Enclosure rating:

| | |
|---|---|
| 0 | Standard |

Stroke sensor:

| | |
|---|---|
| 0 | Without stroke sensor (Standard) |
| 2 | With Pacing relay (Consult Factory) |

Stroke length adjustment:

| | |
|---|---|
| 0 | Manual ( Standard) |
| 1 | With 3P stroke positioning motor, 230 V 50/60 Hz |
| 2 | With 3P stroke positioning motor, 115 V 50/60 Hz |
| 4 | W/ stroke positioning motor 4 - 20 mA, 230 V 50/60 Hz |
| 6 | W/ stroke positioning motor 4 - 20 mA, 115 V 50/60 Hz |

| | | | | | | | | | | | | |
|---|---|---|---|---|---|---|---|---|---|---|---|---|
| S2Ba | HM | 120130 | PV | T | 0 | 0 | 7 | 0 | 2 | 0 | 0 | 0 |

# Identity code: Basic Version Sigma/2 HK (S2Ba)

ProMinent®

S2Ba — Series: Sigma Basic Version a

HK — Main drive/Plunger

Pump version:

| | |
|---|---|
| 32002 | 04522 |
| 14006 | 02541 |
| 07012 | 10006 |
| 04022 | 05016 |
| 23004 | 02534 |
| 10011 | 01264 |

Liquid end material:

SS — 316 Stainless steel

Seal material:

T — PTFE seal

Plunger assembly:

4 — Plunger (Ceramic)

Liquid end version:

0 — Without valve springs (Standard)
1 — With 2 valve springs (Hastelloy C4, 1 psig)

Connectors:

0 — Standard (In accordance with technical data)

Labeling:

0 — Standard with logo

Motor mount:

2 — Without motor, with NEMA 56C flange

Enclosure rating:

0 — Standard

Stroke sensor:

0 — Without stroke sensor (Standard)
1 — With Pacing relay (consult factory)

Stroke length adjustment:

0 — Manual
1 — With 3P stroke positioning motor, 230 V, 50/60 Hz
2 — With 3P stroke positioning motor, 115 V, 50/60 Hz
5 — W/ stroke positioning motor 0 - 20 mA, 115 V, 50/60 Hz
6 — W/ stroke positioning motor 4 - 20 mA, 115 V, 50/60 Hz

SIBa HK 14006 SS T 4 1 0 0 2 0 0 0

# Dimensions: Sigma/2 HM Basic (S2Ba)

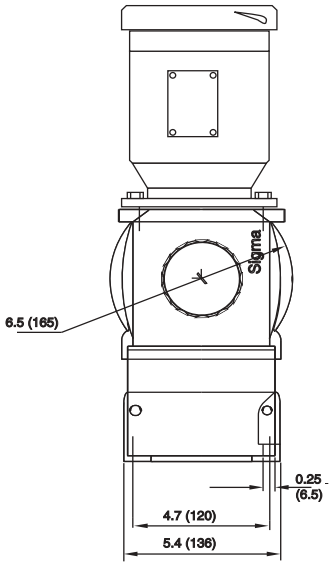


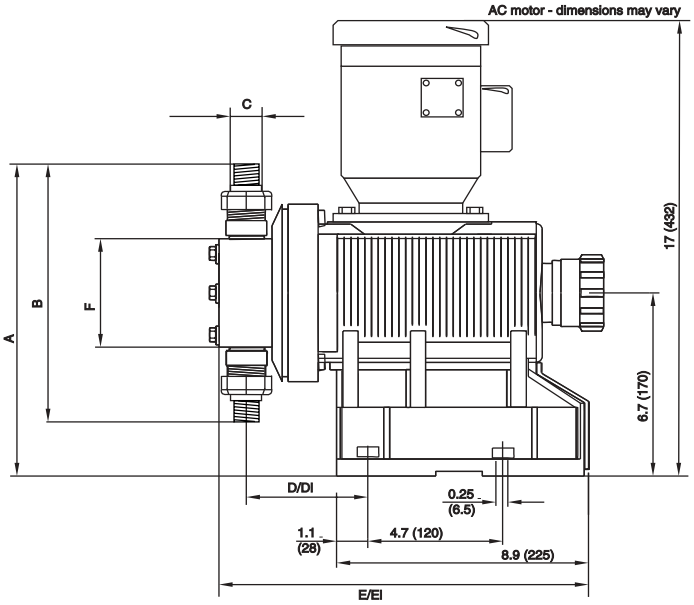


## Dimensions in inches (mm)

| Type Sigma/2 | A | B | Suction/ Discharge Valve Thread C* | D | D1** | E | E1** | F |
|---|---|---|---|---|---|---|---|---|
| 12050, 12090, 12130 | | | | | | | | |
| PVT | 10.1 (257) | 6.95 (177) | DN 15 | 4.1 (104) | 4.9 (124) | 13.0 (329) | 13.7 (349) | 4.0 (101) |
| SST | 10.9 (276) | 8.2 (208) | DN 15 | 4.1 (104) | 4.9 (124) | 13.0 (329) | 13.7 (349) | 4.0 (101) |
| 07120, 07220, | | | | | | | | |
| PVT | 13.3 (337) | 13.1 (332) | DN 25 | 4.5 (115) | 5.3 (135) | 13.4 (340) | 14.2 (360) | 5.8 (148) |
| SST | 13.3 (337) | 13.1 (332) | DN 25 | 4.5 (115) | 5.3 (135) | 13.4 (340) | 14.2 (360) | 5.8 (148) |
| 04350 | | | | | | | | |
| PVT | 14.3 (362) | 14.1 (358) | DN 25 | 4.5 (115) | 5.3 (135) | 13.4 (340) | 14.2 (360) | 5.8 (148) |
| SST | 14.3 (362) | 14.1 (358) | DN 25 | 4.5 (115) | 5.3 (135) | 13.4 (340) | 14.2 (360) | 5.8 (148) |

* Piping adapters provided according to technical data (See Sigma/2-2).

** Dimensions with diaphragm failure detector.

# Dimensions: Sigma/2 HK Basic (S2Ba)

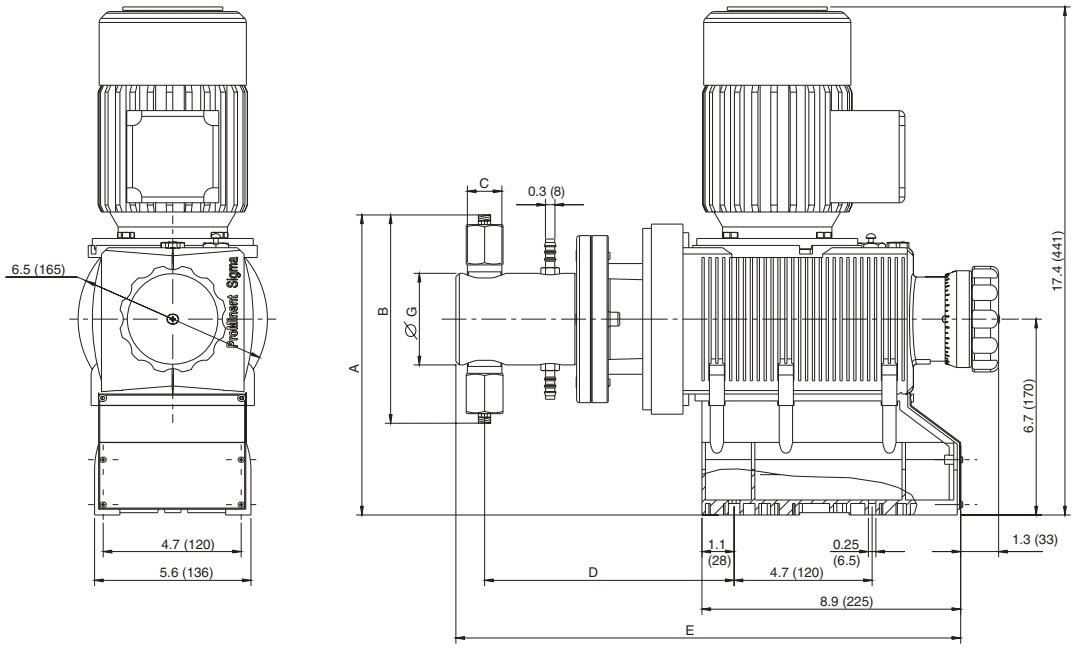


The S2Ba HK models offer other motors, and height dimensions may vary.

## Dimensions in inches (mm)

| Model | Connector | A | B | C | D | E | G |
|---|---|---|---|---|---|---|---|
| 32002<br>23004<br>10006 | 1/4"<br>DN 8 | 10.9<br>(277) | 8.5<br>(216) | R1/4" | 8.5<br>(217) | 17.3<br>(439) | 3.1<br>(79.5) |
| 14006<br>10011<br>05016 | 1/4"<br>DN 8 | 10.9<br>(277) | 8.5<br>(216) | R1/4" | 8.5<br>(217) | 17.3<br>(439) | 3.1<br>(79.5) |
| 07012<br>04522<br>02534 | 1/4"<br>DN 8 | 10.9<br>(277) | 8.5<br>(216) | R1/4" | 8.5<br>(217) | 17.3<br>(439) | 3.1<br>(79.5) |
| 04022<br>02541<br>01264 | 3/8"<br>DN 10 | 11<br>(279) | 8.8<br>(223) | R3/8" | 8.5<br>(217) | 17.3<br>(439) | 3.1<br>(79.5) |

# ProMinent® Sigma/2 Motor-Driven Metering Pumps Control Version S2Ca

## Sigma/2 Control Version

The microprocessor-based electronics for the Sigma/2 control version are the same as the Sigma/1 and Sigma/3 metering pumps. Programming functions enable the user to set and retrieve pertinent information easily.

- flow can be set and displayed in either U.S. gph or L/h
- totalized flow is displayed in gallons or Litres
- accumulative stroke counter is displayed
- optional access code can be programmed to prevent unauthorized adjustment to settings
- three LED lights indicate operational status

The S2Ca pump is available with contact, 4-20 mA analog signal control and Profibus.

Optional monitoring indicators include

- fault annunciating relay for low tank level, loss of flow, system faults and fuse/power supply failure, loss of analog signal, diaphragm rupture
- pacing relay to pace a second pump or totalize flow with an external stroke counter
- Profibus field bus connection for remote monitor and control

Pumps can also be ordered with a diaphragm failure monitor.

# Sigma/2 Microprocessor Control
# Standard Control Modes and Functions

Feed rate is determined by stroke length and stroke rate. Stroke length is manually adjustable from 1 to 100% in increments of 0.5% via the stroke length knob.

Stroke rate can be set to a maximum of 90, 160 or 200 strokes per minute (pump dependent). An illuminated LCD displays stroke length, stroke rate and an accumulative stroke counter, which can be cleared and reset.

Pump capacity output is displayed in either U.S. gph or L/h, set by the operator. Output is accumulated and totalized capacity is also displayed in either U.S. gallons or litres.

The “i” key is used to scroll information screens for stroke rate, stroke length, stroke counter, capacity and totalized capacity. Other information is available depending on control mode.

## Control Modes

Three control modes are available with the Sigma/2: manual, external contact with pulse control (multiplier/divider), batch, or analog control. The Profibus option includes all control modes, plus fieldbus connection.

In the “Manual” mode, stroke rate is controlled manually. The “Contact” external mode allows adjustments to be made externally (e.g. by means of a pulse-type water meter for proportional chemical feed). Pulse signals are fed into the contact input of the pump by an optional control cable. Each pulse from a water meter or pulse-type controller provides the pump an input to pump at the selected pulse ratio, up to the pump's maximum stroke rate. Over-stroking the pump is not possible.

## Standard Functions

### “Calibrate”

The pump can be directly calibrated in-line to actual flow. Calibration is maintained within the stroke frequency range of 90/160/200 spm (model dependent). A warning indicator flashes when adjustments to the stroke volume are made outside the calibrated range of +/- 10%.

### “Auxiliary Frequency”

An auxiliary frequency can be programmed. This default stroking rate can be enabled via the optional control cable.

### “Flow”

The Sigma/2 series metering pumps will monitor their own output, with an optional adjustable flow monitor. Every fluid discharge is sensed and fed back to the electronic control circuit of the pump. If insufficient fluid is discharged for a predetermined number of strokes (up to 125), the pump automatically stops and the red LED lights. The optional fault relay changes state to issue an alarm or activate a standby pump. Call for availability.

### “Float Switch”

An optional two-stage ProMinent float switch can be plugged into the pump to monitor chemical levels in the source tank. An early warning is issued when the allowable minimum level is reached. The pump continues to operate while the display flashes, the yellow LED lights and an optional collective fault relay changes state to issue an alarm. If the liquid level in the supply tank drops another 3/4" (20 mm), the pump automatically shuts down, the LCD displays “Minim” and the red LED lights. The optional fault relay remains activated.

### “Pause”

The Sigma/2 series can be remotely started and stopped via a dry contact through the optional control cable.

### “Stop”

The Sigma/2 can be stopped by pressing the STOP/START key without disconnecting from the power supply.

### “Prime”

Priming is activated by pressing both arrow keys at the same time while the frequency display is showing.

## Function and Error Indicators

Three LED lights on the pump faceplate signal operational status. The green light flashes during normal operation, and the yellow light warns of a situation that could lead to a fault (e.g. low chemical). If a fault occurs “error” will appear on the LCD screen and the red LED light appears.

ProMinent®

# Sigma/2
# Optional Control Modes and Features

## Optional Control Modes

### "Analog" Mode

With this option, the stroking rate of the Sigma/2 is directly proportional to the analog signal. For a custom range setting, the curve feature of the analog input can be selected. With this, the pump response to the analog input can be easily programmed.

### "Contact" Mode with Pulse Control

This feature is used to "tune" the pump to contact generators of any kind (e.g. pulse-type water meter or process controller), and eliminate the need for a costly external control unit. The following functions can be selected by means of the keypad.

Pulse step-up (multiply) and step-down (divide)

By simply entering a factor in the 0.01-99.99 range, the step-up or step-down ratio is set.

For example:

Step-up Factor:
99.99 1 pulse = 99.99 pump strokes
10 1 pulse = 10 pump strokes

Step-down Factor:
0.25 4 pulses = 1 pump stroke
0.01 100 pulses = 1 pump stroke

"Batch" Mode

The Batch mode is a variation of the contact operating mode. A number of strokes can be predetermined up to 65,535 strokes (whole numbers) or the feed quantity can be predetermined. The batch is then initiated by either pressing the "P" key on the pump face or providing a contact to the external control cable.

## Access Code

A programmable access code to prevent unauthorized changes to settings is available as an option.

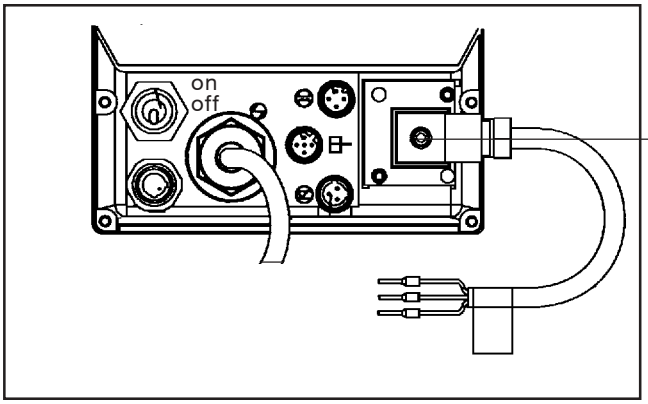


An external panel enables optional relays to be installed on-site.

## Relay outputs

Fault annunciating relay

For low tank level (flow switch), loss of flow (flow monitor), loss of analog signal and diaphragm rupture monitor, system faults and fuse/power supply failure.

Fault annunciating and Pacing relay

In addition to the fault annunciating relay, a contact closure is issued with every pump stroke (contact duration 150 ms). This allows a second ProMinent metering pump to be paced synchronously, or to totalize flow with an external stroke counter.

4-20 mA Analog Output

A 4-20 mA analog output option is available for use with pumps that operate in the manual mode or by a remote 4-20 mA analog reference signal. The 4-20 mA analog output signal is linear to pump frequency multiplied by the percentage of stroke length. The output signal is isloated and can drive up to 300 Ohms impedance. Analog output can be used for status feedback to higher level control systems for closed loop control or for monitoring chemical usage. This option is available in combination with either the fault annunciating or pacing relay.

Timer Relay

The optional integrated 2-week timer offers 81 programmable events. It can be set to hourly, daily, work days, weekend, weekly or two-week periods with switch-on times from 1 second to two weeks. The timer can be programmed to change operation mode, frequency and the function of two relays. All the functions can be programmed independently of one another. Up to 13 delay times can be programmed into the timer function.

The range of applications exceeds that of a "standard timer". Typical application is disinfection in cooling towers, process water, etc. with the ability to automatically program shock dosages or increase the concentration at a certain interval.

## Fieldbus connection

Monitor and control remotely via a SCADA/PLC system using the profibus-DP system.

Note: Relay options not available with profibus. Profibus is not field retrofittable.

# Identity code: Control Version Sigma/2 HM (S2Ca)

ProMinent®

**Series:**

| | |
|---|---|
| S2Ca | Sigma/2 Control Version a |

**Main drive**

| | |
|---|---|
| HM | Main drive/Diaphragm |

**Pump version:**

| | | |
|---|---|---|
| 12050* | 07120 | |
| 12090* | 07220 | * For PVDF versions, max. 145 psig (10 bar) |
| 12130* ** | 04350** | ** Max. 200 strokes per minute |

**Liquid end materials:**

| | |
|---|---|
| PVT | PVDF with PTFE/Viton® seal |
| SST | 316 Stainless steel with PTFE/Viton® seal |

Viton® is a registered trademark of DuPont Dow

**Diaphragm type:**

| | |
|---|---|
| 0 | Standard diaphragm, PTFE |
| 1 | With double diaphragm and failure monitor (NC contact opens on fault) |
| 2 | With double diaphragm and failure monitor (alarm & continues to operate) |

**Liquid end version:**

| | |
|---|---|
| 0 | Without valve springs |
| 1 | With 2 valve springs (Hastelloy C4, 1.45 psig) |

**Connectors:**

| | |
|---|---|
| 7 | PVDF clamping nut & insert |
| 8 | SS clamping nut & insert |

**Labeling:**

| | |
|---|---|
| 0 | Standard with logo |

**Voltage supply:**

| | |
|---|---|
| U | 1 ph, 115-230 V ± 10%, 50/60 Hz |

**Cable and plug with 6 ft (2 m) power cord, single phase:**

| | |
|---|---|
| A | European plug, 230 V |
| D | N. American plug, 115 V |
| U | N. American plug, 230 V |

**Relay:**

| | |
|---|---|
| 0 | Without relay |
| 1 | Fault annunciating relay, drops out |
| 3 | Fault annunciating relay, pulls in |
| 4 | Option 1 + pacing relay |
| 5 | Option 3 + pacing relay |
| C | Option 1 + 4-20 mA output |
| D | Option 3 + 4-20 mA output |
| E | Pacing relay + 4-20 mA output |
| F | High current relay drops out |
| G | High current relay pulls in |

**Control variants:**

| | |
|---|---|
| 0 | Manual + External with pulse control (multiplier/divider) |
| 1 | Manual + External with pulse control & analog control |
| 4 | Option 0 + timer |
| 5 | Option 1 + timer |
| P | Option 1 + Profibus (Relay must be 0) |

**Access code:**

| | |
|---|---|
| 0 | No access code |
| 1 | Access code |

**Flow monitor:**

| | |
|---|---|
| 0 | Input for metering monitor signal (pulse) |
| 1 | Input for maintained flow switch signal |

**Stroke length adjustment:**

| | |
|---|---|
| C | Manual + Calibration |

| | | | | | | | | | | | | | | |
|---|---|---|---|---|---|---|---|---|---|---|---|---|---|---|
| S2Ca | H | 07120 | PVT | 0 | 0 | 7 | 0 | U | D | 0 | 0 | 0 | 0 | C |

# Identity code: Control Version Sigma/2 HK (S2Ca)

S2Ca — Series: Sigma Control Version a

HK — Main drive/ Plunger

Pump version:

| | |
|---|---|
| 32002 | 04522 |
| 14006 | 02541 |
| 07012 | 10006 |
| 04022 | 05016 |
| 23004 | 02534 |
| 10011 | 01264 |

Liquid end material:

SS — 316 Stainless steel

Seal material:

T — PTFE seal

Plunger:

4 — Plunger (Ceramic)

Liquid end version:

0 — Without valve springs (Standard)
1 — With 2 valve springs (Hastelloy C4, 1 psig)

Connectors:

0 — Standard (In accordance with technical data)

Labeling:

0 — Standard with logo

Voltage supply:

U — 1 ph, 115-230 V ± 10%, 50/60 Hz

Cable and plug with 6 ft (2 m) power cord, single phase:

A — European plug, 230 V
D — N. American plug, 115 V
U — N. American plug, 230 V

Relay:

0 — Without relay
1 — Fault annunciating relay, drops out
3 — Fault annunciating relay, pulls in
4 — Option 1 + pacing relay
5 — Option 3 + pacing relay

Control variants:

0 — Manual + External with pulse control (multiplier/divider)
1 — Manual + External with pulse control & analog control
4 — Option 0 + timer
5 — Option 1 + timer
P — Option 1+ Profibus (Relay must be 0)

Access code:

0 — No access code
1 — Access code

Flow monitor:

0 — Input for metering monitor signal (pulse)
1 — Input for maintained flow switch signal

Stroke length adjustment:

0 — Manual

| | | | | | | | | | | | | | | | |
|---|---|---|---|---|---|---|---|---|---|---|---|---|---|---|---|
| S2Ca | HK | 14006 | SS | T | 4 | 0 | 0 | 0 | U | D | 0 | 0 | 0 | 0 | 0 |

# Dimensions: Sigma/2 HM Control (S2Ca)

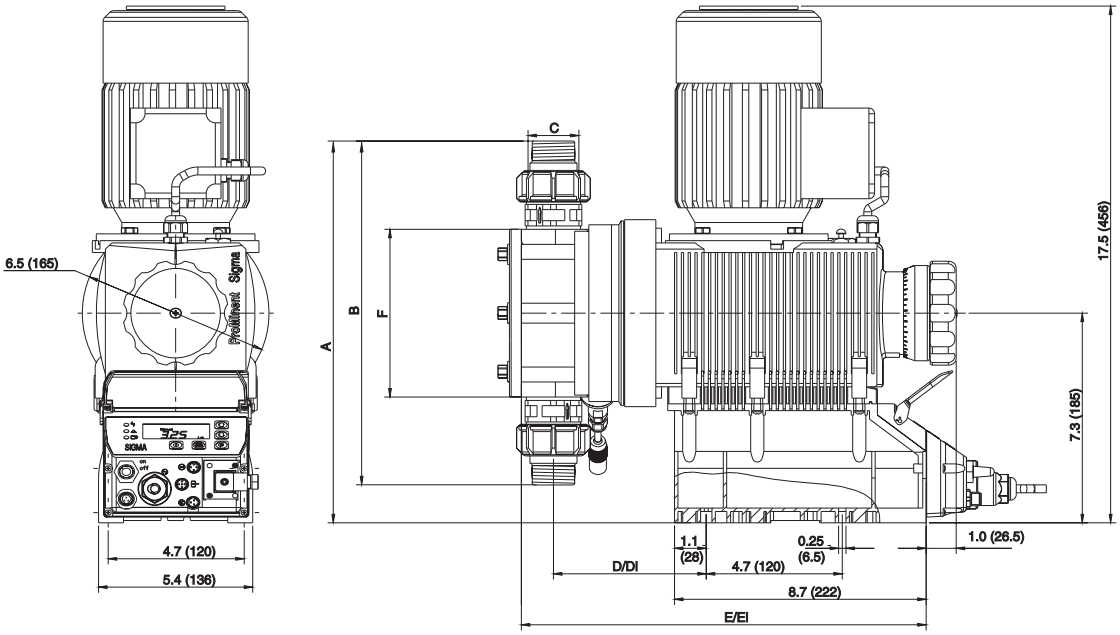


## Dimensions in inches (mm)

| Type Sigma/2 | A | B | Suction/ Discharge Valve Thread C* | D | D1** | E | E1** | F |
|---|---|---|---|---|---|---|---|---|
| 12050, 12090, 12130 | | | | | | | | |
| PVT | 10.6 (272) | 6.95 (177) | DN 15 | 4.1 (104) | 4.9 (124) | 12.8 (326) | 13.6 (346) | 4.0 (101) |
| SST | 10.4 (288) | 8.2 (208) | DN 15 | 4.1 (104) | 4.9 (124) | 12.8 (326) | 13.6 (346) | 4.0 (101) |
| 07120, 07220, | | | | | | | | |
| PVT | 13.9 (352) | 13.1 (332) | DN 25 | 4.5 (115) | 5.3 (135) | 13.3 (337) | 14.1 (357) | 5.8 (148) |
| SST | 13.9 (352) | 13.1 (332) | DN 25 | 4.5 (115) | 5.3 (135) | 13.3 (337) | 14.1 (357) | 5.8 (148) |
| 04350 | | | | | | | | |
| PVT | 14.9 (377) | 14.1 (358) | DN 25 | 4.5 (115) | 5.3 (135) | 13.3 (337) | 14.1 (357) | 5.8 (148) |
| SST | 14.9 (377) | 14.1 (358) | DN 25 | 4.5 (115) | 5.3 (135) | 13.3 (337) | 14.1 (357) | 5.8 (148) |

* Piping adapters provided according to technical data (See Sigma/2-2).

** Dimensions with diaphragm failure detector

# Dimensions: Sigma/2 HK Control (S2Ca)

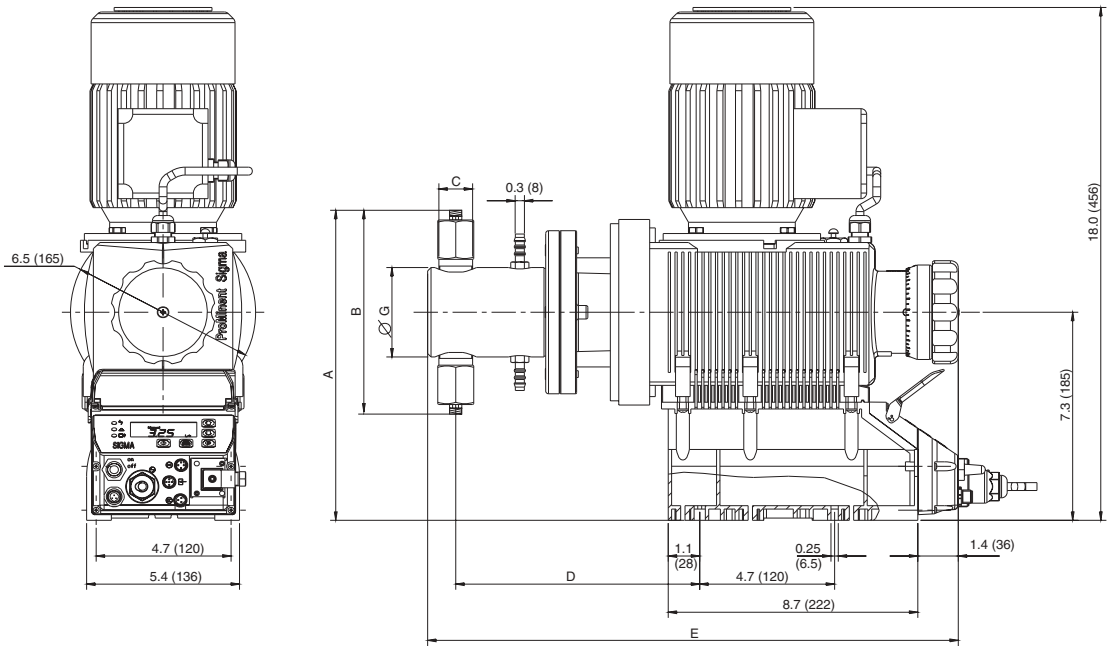


Dimensions in inches (mm)

| Model | Connector | A | B | C | D | E | G |
|---|---|---|---|---|---|---|---|
| 32002<br>23004<br>10006 | 1/4"<br>DN 8 | 11.5<br>(292) | 8.5<br>(216) | R1/4" | 8.5<br>(217) | 17.3<br>(439) | 3.1<br>(79.5) |
| 14006<br>10011<br>05016 | 1/4"<br>DN 8 | 11.5<br>(292) | 8.5<br>(216) | R1/4" | 8.5<br>(217) | 17.3<br>(439) | 3.1<br>(79.5) |
| 07012<br>04522<br>02534 | 1/4"<br>DN 8 | 11.5<br>(292) | 8.5<br>(216) | R1/4" | 8.5<br>(217) | 17.3<br>(439) | 3.1<br>(79.5) |
| 04022<br>02541<br>01264 | 3/8"<br>DN 10 | 11.6<br>(294) | 8.8<br>(223) | R3/8" | 8.5<br>(217) | 17.3<br>(439) | 3.1<br>(79.5) |

# ProMinent® Sigma/2
# Metering monitor

| Description | Part No. |
|---|---|

## Metering monitor

### Adjustable metering monitor “Flow Control”

For S2Ca HM with connection cable for assembly directly to liquid end.

Monitors individual strokes according to the float and orifice principle. The partial quantity of chemical flowing past the float is adjusted from the total stroke volume via the adjusting screw so that an alarm is actuated if there is no pump flow. The user can select the number of incomplete strokes permitted (between 1 and 125) in accordance with the actual process requirements.

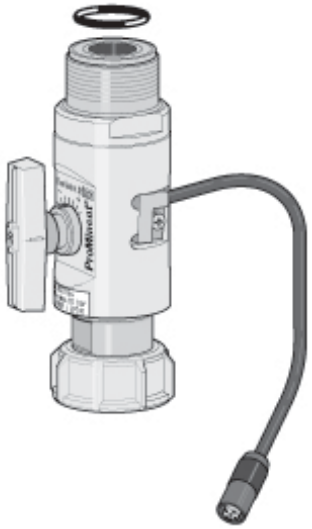

Materials:

| | |
|---|---|
| Flow meter: | PVDF |
| Float: | PTFE-coated |
| Seals: | Viton®/EPDM |

| Flow Control | Material | for pump type | |
|---|---|---|---|
| Flow Control DN15 | PVDF, EPDM | 12050, 12090, 12130 | 1021170 |
| Flow Control DN15 | PVDF, Viton® | 12050, 12090, 12130 | 1021171 |
| Flow Control DN25 | PVDF, EPDM | 07120,07220,04350 | 1021164 |
| Flow Control DN25 | PVDF, Viton® | 07120,07220,04350 | 1021165 |

Flow monitor

Pump

[For use with low-viscosity (water-like) fluids only].

Viton® is a registered trademark of DuPont Dow Elastomers

# ProMinent® Sigma/2
# Control cables

| Description | Part No. |
|---|---|

## External control cables

### Universal control cable

For metering pump control via contact closure (pulse), standard process signal (analog), and voltage-free contact for remote pause control and auxiliary frequency.

For Sigma pumps with 5-pole round plastic connector and 5-wire cable with loose end.

| | |
|---|---|
| Universal control cable, 5-pole round connector, 5-wire, 6 ft. (2 m) | 1001300 |
| Universal control cable, 5-pole round connector, 5-wire, 16.4 ft. (5 m) | 1001301 |
| Universal control cable, 5-pole round connector, 5-wire, 32.8 ft. (10 m) | 1001302 |

### ON/OFF Control (Pause)

BROWN and BLACK wires must be connected together via an ON/OFF contact or shorted together. When the contact is closed between the BLACK & BROWN wires, the pump will run. When the contact is open, the pump will stop.

Note: If ON/OFF control is the only control feature being used, WHITE, BLUE & GREY wires are not used and should be cut back.

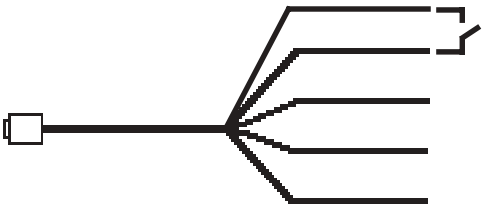

BROWN: Remote On/Off (+)

BLACK: Common

GREY: Auxiliary Frequency

WHITE: Pulse (+)

BLUE: Analog (+)

### Pulse Control

Pulse control will allow the pump to run in proportion to a pulsing potential free contact closure.

Note: BROWN and BLACK wires have to be connected together via an ON/OFF contact or shorted together. GREY wire is not used and should be cut back.

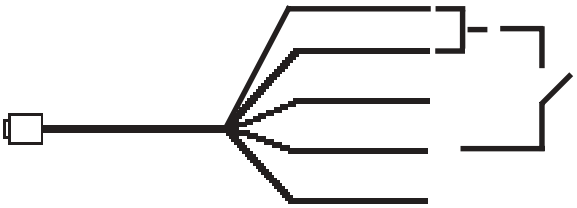

BROWN: Remote On/Off (+)

BLACK: Common

GREY: Auxiliary Frequency

WHITE: Pulse (+)

BLUE: Analog (+)

# ProMinent® Sigma/2
# Control cables

| Description | Part No. |
|---|---|

## External control cables

### Analog Control

Analog control runs in proportion to an analog signal such as 4 - 20 mA.

Note: BROWN and BLACK wires must be connected together via an ON/OFF contact or shorted together. The BLACK wire is negative and the BLUE wire is positive. GREY wire is not used and should be cut back.

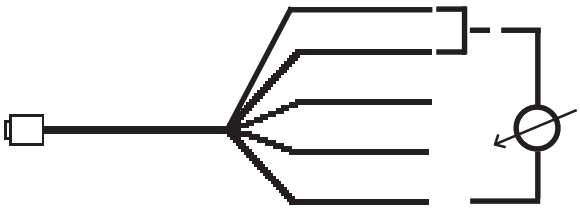

BROWN: Remote On/Off (+)

BLACK: Common

GREY: Auxiliary Frequency

WHITE: Pulse (+)

BLUE: Analog (+)

### Auxiliary Frequency

Auxiliary frequency will allow the pump to default to a predetermined stroking frequency regardless of which operating mode the pump is in. The pump defaults to this stroking frequency as long as a contact is closed between the black and grey wires of the universal control cable.

Note: BROWN and BLACK wires must be connected together via an ON/OFF contact or shorted together.

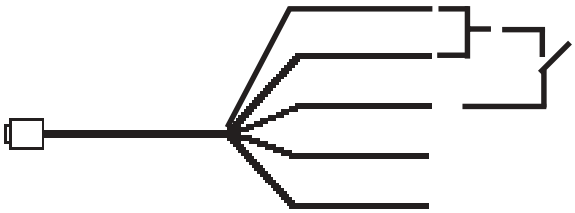

BROWN: Remote On/Off (+)

BLACK: Common

GREY: Auxiliary Frequency

WHITE: Pulse (+)

BLUE: Analog (+)

# ProMinent Sigma/2 HM & HK Spare Parts

## Spare Parts and Liquid Ends

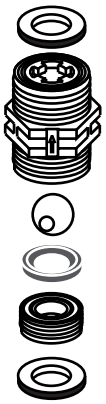

Valve Complete

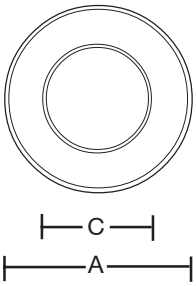


| Liquid End | Dim A (mm) | Dim C (mm) |
|---|---|---|
| FM 130 | 87.3 | 50.8 |
| FM 350 | 123.8 | 82.5 |

Complete liquid ends include pump head, valves, mounting screws, diaphragm and backplate. Clamping nuts and inserts are not included with complete liquid ends, complete valves or spare parts kits (see the High Flow Accessories section for these parts). Spare parts kits include:

PVT Liquid ends
- 1 Diaphragm
- 1 Suction valve, complete
- 1 Discharge valve, complete
- 2 Valve balls
- 1 Set of seals, complete (sleeve rings, ball seat rings, ball seals)

SST Liquid ends
- 1 Diaphragm
- 2 Valve balls
- 1 Set of seals, complete (sleeve rings, ball seat rings)

| Material Code | Liquid End Complete | Spare Parts Kit | Valve Complete | Diaphragm |
|---|---|---|---|---|
| 12050 with Liquid end FM 130 | | | | |
| PVT | 792755 | 740324 | 792517 | 792495 |
| SST | 792761 | 740328 | 809404 | 792495 |
| SST* | | 740326 | | |
| 12090, 12130 with Liquid end FM 130 | | | | |
| PVT | 7792755 | 740324 | 792517 | 792495 |
| SST | 792761 | 740328 | 809404 | 792495 |
| SST* | | 740326 | | |
| 07120, 07220 with Liquid end FM 350 | | | | |
| PVT | 792756 | 740325 | 740615 | 792496 |
| SST | 792762 | 740329 | 803708 | 792496 |
| SST* | | 740327 | | |
| 04350 with Liquid end FM 350 | | | | |
| PVT | 7792756 | 740325 | 740615 | 792496 |
| SST | 792762 | 740329 | 803708 | 792496 |
| SST* | | 740327 | | |

*Without valves

| Liquid End Version | | Material Code | Complete Liquid End | Spare Parts Kit | Valve Complete Suction (Spare valves only) | Valve Complete Discharge (Spare valves only) | Packing set |
|---|---|---|---|---|---|---|---|
| Sigma HK | | | | | | | |
| 08 | (For pump versions 32002, 23004, & 10006) | S | 1000584 | 1001572 | 803792 | 803793 | 1000565 |
| 12.5 | (For pump versions 14006, 10011, & 05016) | S | 910420 | 910470 | 803792 | 803793 | 485401 |
| 25 | (For pump versions 07012, 04522, & 02534) | S | 910421 | 910471 | 803792 | 803793 | 485402 |
| 50 | (For pump versions 04022, 02541, & 01264) | S | 910422 | 910472 | 803794 | 803795 | 485403 |

Sigma 130 PVT Liquid End Complete. For Pump Types: 12050, 12090, 12130

ProMinent®

## Exploded View

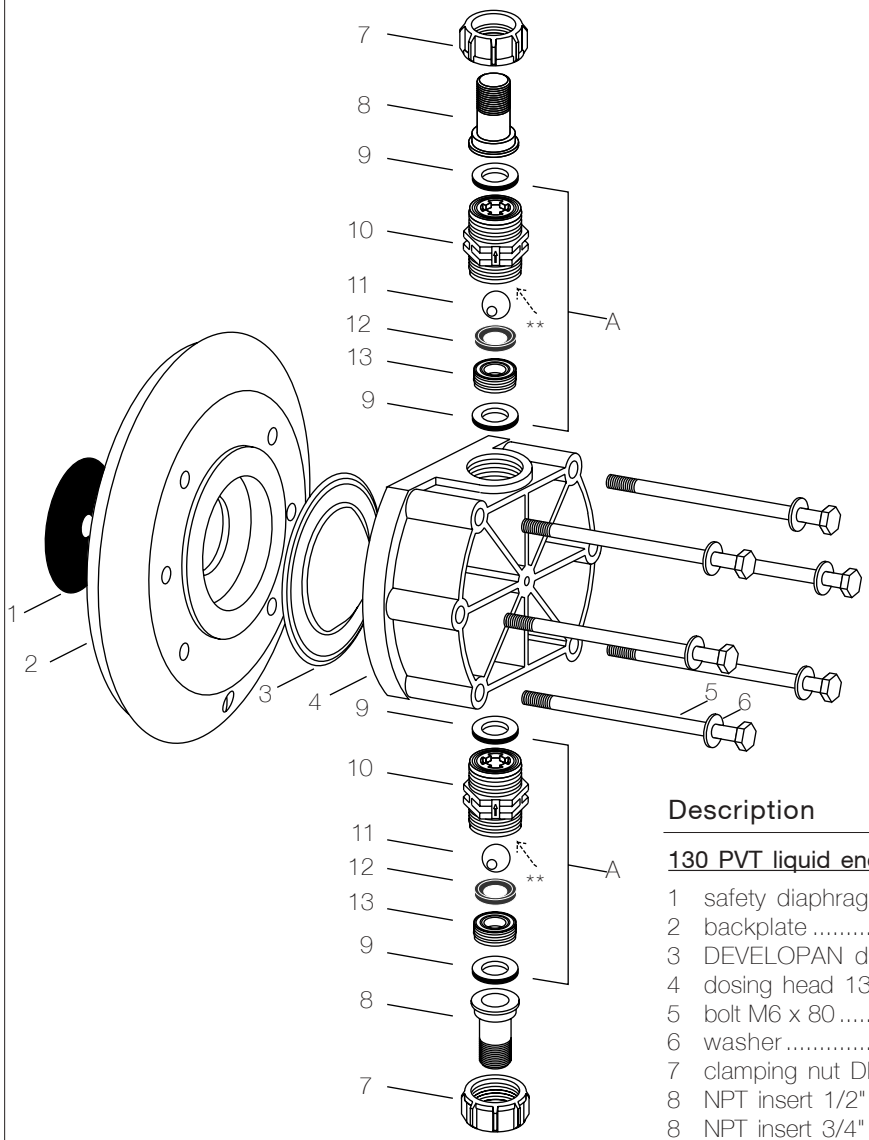


| | Description | Qty. | Part No. |
|---|---|---|---|
| | 130 PVT liquid end complete | 1 | 792755 |
| 1 | safety diaphragm | 1 | 792474 |
| 2 | backplate | 1 | 792499 |
| 3 | DEVELOPAN diaphragm | 1 | 792495 |
| 4 | dosing head 130 PVDF | 1 | 790131 |
| 5 | bolt M6 x 80 | 6 | 468166 |
| 6 | washer | 6 | 462229 |
| 7 | clamping nut DN15 PVDF | 2 | 358814 |
| 8 | NPT insert 1/2" PVDF (12050) or | 2 | 7358641 |
| 8 | NPT insert 3/4" PVDF (12090, 12130) | 2 | 7358642 |
| ** | indicates location of spring if needed | | |

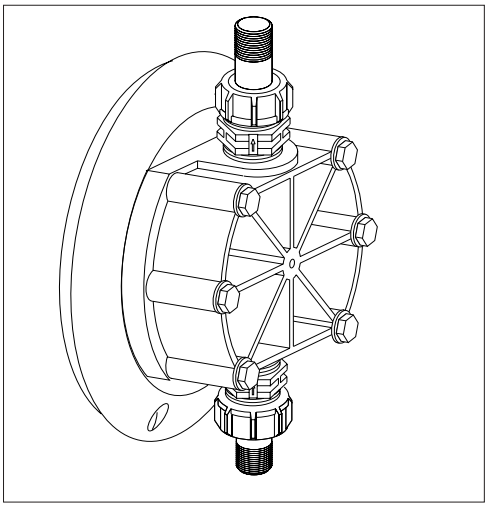

| | | | |
|---|---|---|---|
| A | valve cpl. DN15 PVT | *2 | 792517 |
| 9 | cover ring DN15 | 2 | 483984 |
| 10 | valve body DN15 PVDF | 1 | 792501 |
| 11 | valve ball 17mm Ceramic | 1 | 740614 |
| 12 | ball seat disc DN15 PTFE Sigma | 1 | 740613 |
| 13 | ball seat bushing DN15 PVDF | 1 | 792454 |

* Sigma valves complete are used as *both* suction *and* discharge valves. Quantities reflect # of components in *each* valve.

| | | | |
|---|---|---|---|
| | Spare Parts Kit | 1 | 740324 |
| A | valve cpl. DN15 PVT | 2 | 792517 |
| 3 | DEVELOPAN diaphragm | 1 | 792495 |
| 9 | cover ring DN15 | 4 | 483984 |
| 11 | valve ball 17mm Ceramic | 2 | 740614 |
| 12 | ball seat disc DN15 PTFE Sigma | 2 | 740613 |
| 13 | ball seat bushing DN15 PVDF | 2 | 792454 |

#SIG1PVT-1/97NA

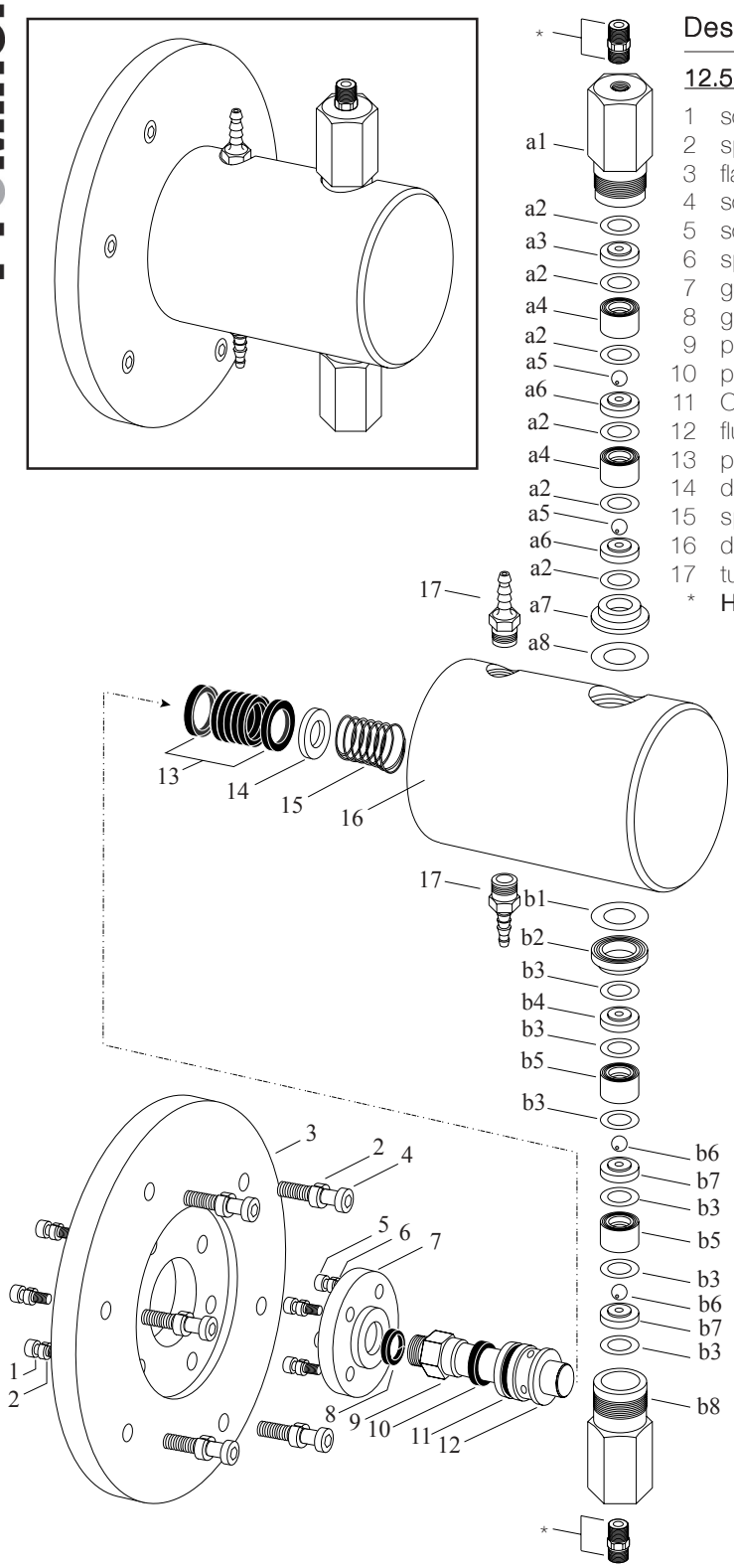


| | Description | Qty. | Part No. |
|---|---|---|---|
| | 12.5 SS HK liquid end complete | 1 | 910420 |
| 1 | screw M6 x 16 | 6 | 468083 |
| 2 | spring washer | 12 | 462456 |
| 3 | flange d145 x 15 (HK) | 1 | 803763 |
| 4 | screw M6 x 20 | 6 | 468084 |
| 5 | screw M5 x 16 | 4 | 465114 |
| 6 | spring washer | 4 | 462411 |
| 7 | guide ring d12 SS | 1 | 803765 |
| 8 | guide ring d12 PTFE | 1 | 485446 |
| 9 | piston cpl. d12 | 1 | 1000586 |
| 10 | packing ring (HK 12.5) PTFE | 1 | 485456 |
| 11 | O-ring 18 x 2 Viton | 1 | 481022 |
| 12 | flushing ring d12 | 1 | 803764 |
| 13 | packing set 12-22-25 Teflon | 1 | 485401 |
| 14 | disc d12 SS | 1 | 803766 |
| 15 | spring | 1 | 469466 |
| 16 | dosing head body only (FK 12.5) | 1 | 810670 |
| 17 | tube nozzle PVC | 1 | 358206 |
| * | Hex Nipple 1/4" MNPT (316 SS) | 2 | 7740931 |
| A | dis. valve 12.5 SS HK | 1 | 803793 |
| a1 | valve body 12.5 SS | 1 | 803773 |
| a2 | gasket 21.5 x 15 x 1 PTFE | 6 | 483909 |
| a3 | guide disc 9.5 SS HK | 1 | 104208 |
| a4 | valve insert SS HK | 2 | 803775 |
| a5 | valve ball 9.2mm Ceramic | 2 | 404281 |
| a6 | ball seat disc 9.5 SS HK | 2 | 803774 |
| a7 | insert washer SS HK | 1 | 1005097 |
| a8 | gasket 27.5 x 16 x .5 Teflon | 1 | 1005096 |
| B | suct. valve 12.5 SS HK | 1 | 803792 |
| b1 | gasket 27.5 x 16 x .5 Teflon | 1 | 1005096 |
| b2 | insert washer SS HK | 1 | 1005097 |
| b3 | gasket 21.5 x 15 x 1 PTFE | 6 | 483909 |
| b4 | guide disc 9.5 SS HK | 1 | 104208 |
| b5 | valve insert SS HK | 2 | 803775 |
| b6 | valve ball 9.2mm Ceramic | 2 | 404281 |
| b7 | ball seat disc 9.5 SS HK | 2 | 803774 |
| b8 | valve body 12.5 SS | 1 | 803773 |
| | Spare Parts Set 12.5 SS HK | 1 | 910470 |
| 8 | guide ring d12 PTFE | 1 | 485446 |
| 9 | piston cpl. d12 | 1 | 1000586 |
| 10 | packing ring (HK 12.5) PTFE | 1 | 485456 |
| 11 | O-ring 18 x 2 Viton | 1 | 481022 |
| 13 | packing set 12-22-25 Teflon | 1 | 485401 |
| a2 | gasket 21.5 x 15 x 1 PTFE | 12 | 483909 |
| a5 | valve ball 9.2mm Ceramic | 4 | 404281 |
| a6 | ball seat disc 9.5 SS HK | 4 | 803774 |
| a8 | gasket 27.5 x 16 x .5 Teflon | 2 | 1005096 |

#SIGHKSS9/6/01

Sigma 350 PVT Liquid End Complete. For Pump Types: 07120, 07220, 04350

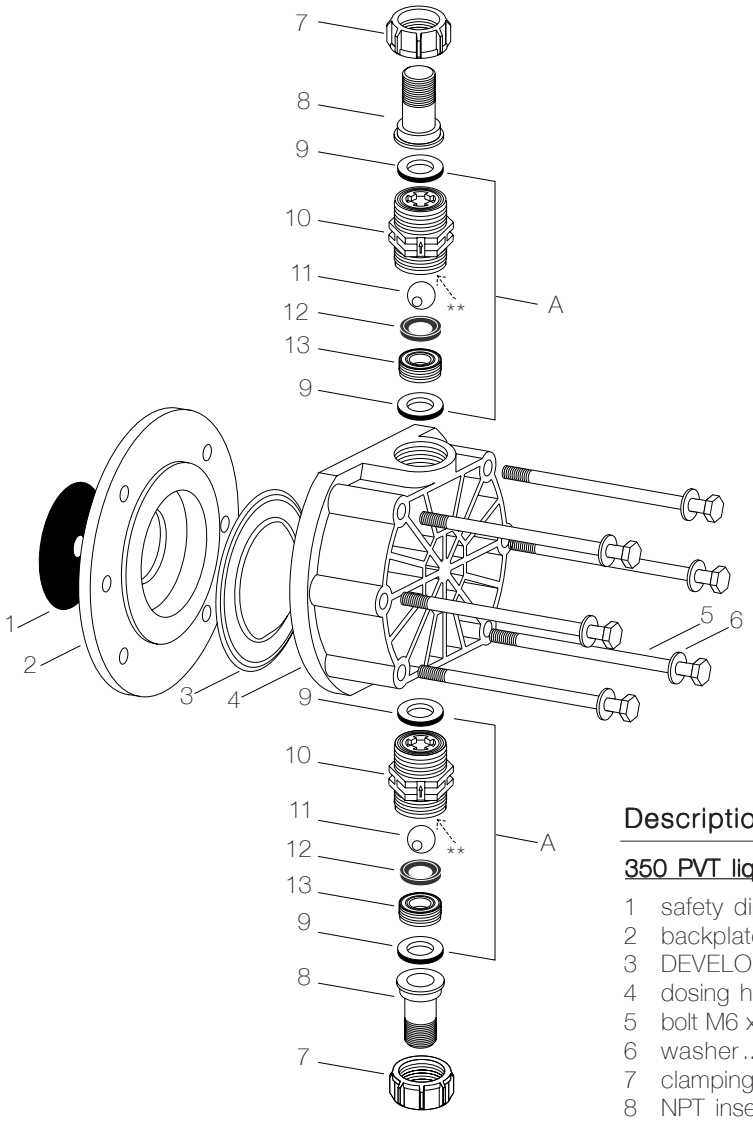


| Description | | Qty. | Part No. |
|---|---|---|---|
| | 350 PVT liquid end complete | 1 | 792756.9 |
| 1 | safety diaphragm | 1 | 792474.9 |
| 2 | backplate | 1 | 790123.4 |
| 3 | DEVELOPAN diaphragm | 1 | 792496.2 |
| 4 | dosing head 350 PVDF | 1 | 790212.5 |
| 5 | bolt M6 x 90 | 6 | 468167.2 |
| 6 | washer | 6 | 462229.6 |
| 7 | clamping nut DN25 PVDF | 2 | 358816.7 |
| 8 | NPT insert 1" PVDF (04350) or | 2 | 7358644.8 |
| 8 | NPT insert 3/4" PVDF (07120, 07220) | 2 | 7358645.5 |
| ** | indicates location of spring if needed | | |
| A | valve cpl. DN25 PVT | *2 | 740615.0 |
| 9 | cover ring DN25 | 2 | 483986.6 |
| 10 | valve body DN25 PVDF | 1 | 740520.2 |
| 11 | valve ball 25mm Duran | 1 | 404217.2 |
| 12 | ball seat disc DN25 PTFE Sigma | 1 | 792510.0 |
| 13 | ball seat bushing DN25 PVDF | 1 | 740539.2 |
| * | Sigma valves complete are used as *both* suction *and* discharge valves. Quantities reflect # of components in *each* valve. | | |

| | | | |
|---|---|---|---|
| | Spare Parts Kit | 1 | 740325.6 |
| A | valve cpl. DN25 PVT | 2 | 740615.0 |
| 3 | DEVELOPAN diaphragm | 1 | 792496.2 |
| 9 | cover ring DN25 | 4 | 483986.6 |
| 11 | valve ball 25mm Duran | 2 | 404217.2 |
| 12 | ball seat disc DN25 PTFE Sigma | 2 | 792510.0 |

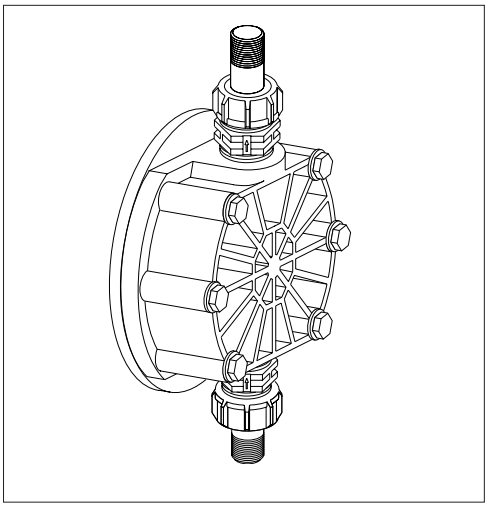

#SIG5PVT-1/97NA

**THIS IS A MASTER, EDIT FOR SPECIFIC APPLICATION))**
**PROMINENT FLUID CONTROLS, INC. – SIGMA/2 HM (for flow rates from 16 to 111 gph)**

## PART 1 – GENERAL

### 1.1 GENERAL

A. This specification covers the supply, installation, and testing of a complete functional metering pump system including all accessories and appurtenances as shown on the drawings and described herein. A single chemical metering pump manufacturer shall be responsible for supplying all components of the metering feed system.

### 1.2 QUALITY ASSURANCE

A. For the purpose of establishing quality assurance, experience, and system reliability, the products described herein are based on those metering pumps manufactured by ProMinent Fluid Controls, Inc. All pumps shall be shop-tested for capacity at rated pressure prior to shipment, with documented results provided.

### 1.3 WARRANTY

A. The chemical metering pump manufacturer shall provide a two year warranty on the metering pump mechanical drive and one year on the liquid end.

## PART 2 – PRODUCTS

### 2.1 GENERAL

A. Manufacturers:
   1. ProMinent Fluid Controls, Inc.
   2. Pre-approved equal.

### 2.2 DESCRIPTION

A. The chemical metering pump shall be a simplex, motor-driven, reciprocating, mechanically-actuated diaphragm type. The pump shall include integral motor, oil-lubricated gear reducer, and cam-and-spring drive mounted in an aluminum housing. Such housing to be sealed into an outer plastic housing for corrosion protection with heat sinks for cooling.

B. The power supply shall be ___VAC, ___Hz, ___Phase.

C. The liquid end shall be physically separated from the drive unit by a back plate with weep hole creating air gap separation. An elastomer shaft wiper seal shall prevent contamination of the gear box by confining chemical within the back plate if the primary diaphragm fails. The primary diaphragm shall have a steel core, vulcanized into a nylon-reinforced EPDM backing, with PTFE-faced fluid contact surface.

D. ((OPTIONAL)) The liquid end shall also feature a secondary diaphragm separated from the primary diaphragm by a spacer plate with diaphragm-isolated pressure switch to close a contact for alarm annunciation and to prevent chemical spill or intrusion into pump drive upon failure of the primary diaphragm.

### 2.3 LIQUID END

A. The diaphragm shall be of a convex design fitting into a concave liquid end to minimize diaphragm wear, liquid end dead volume, and to promote flow of solids in suspension.

((SELECT ONE))

- The liquid end shall be virgin PVDF. The suction and discharge valve shall be PVDF with PTFE faced Viton gasket seals and ceramic valve balls.

Or

- The liquid end shall be 316 stainless steel. The suction and discharge valves shall be 316 stainless steel with PTFE-faced Viton gasket seals and stainless steel valve balls.

**2.4 CONTROL ((BASIC VERSION PUMP))**

A. Stroke length control of the basic version pump

((SELECT ONE))

- shall be adjustable manually by means of a stroke length knob, in increments of 0.5%, from 0% to 100% of stroke length.

Or

- shall be adjustable by means of a stroke positioning motor from 0% to 100% of stroke length. The stroke positioning motor shall feature visual stroke length indication and manual/ external selector switch for local control via toggle switch or external control in proportion to a 4-20 mA signal.

B. Stroke frequency control of the basic version pump

((SELECT ONE))

- shall be fixed at the pump's maximum stroke rate. Pump shall include a 1/3 HP, TEFC, four-pole AC motor.

Or

- shall be controlled by DC SCR drive system for stroke frequency control. The SCR shall include a wall mountable NEMA 4 enclosure with on/off switch, manual/external switch and speed potentiometer. The DC voltage output to the motor shall be proportional to the potentiometer setting in manual mode, or proportional to an external 4-20 mA signal in external mode. Pump shall include a 1/3 HP, TENV, permanent magnet 90V DC motor.

Or

- shall be controlled by an SCR drive system for stroke frequency control. The SCR shall include a wall mountable NEMA 4 enclosure with on/off switch, manual/external switch and membrane keypad and digital display spannable to show RPM, percent output or flow rate. The actual motor speed, as measured by motor-mounted tachometer, shall be proportional to the rate setting in manual mode, or proportional to an external 4-20 mA signal in external mode. Pump shall include a 1/3 HP, TENV, permanent magnet 90V DC motor and Tach.

Or

- shall be controlled by an AC inverter system for stroke frequency control. The inverter shall include a wall mountable NEMA 4/12 enclosure with keypad and display of % load or output voltage. Selectable for local or remote operation via 4-20 mA signal. Pump shall include a 1/3 HP, inverter duty, 3-phase, 208-230 VAC motor. Minimum speed 3-30 Hz.

**2.5 PROGRAMMING AND CONTROL ((CONTROL VERSION PUMP))**

A. The metering pump shall be microprocessor-controlled. All pumping functions shall be set by membrane-switch keypad and status shall be displayed on an illuminated LCD, which is readable at an offset of 45 degrees. Keypad will allow for simple scrolling of programmed parameters.

B. Stroke length control shall be adjustable manually by means of a stroke length, in increments of 0.5%, from 0 to 100% of stroke length. The LCD shall digitally display stroke length in 1% increments in the full range between 100% and 0%.



ProMinent®

C. Programming shall allow pump to be calibrated so as to display pump output in gallons/hour or liters/hour. Calibration shall be maintained when stroke length is altered up to +/-10% on the stroke length knob. If stroke length is altered by more than +/-10%, a yellow warning light will light and a flashing message "calib" will appear.

D. The pump shall be equipped with the programmable function of electronic interlocking of the keypad by access code to prevent unauthorized adjustments to the pump.

E. Keypad shall allow for scrolling and display on LCD such parameters as stroke frequency, stroke length, stroke counter, pump output in gals/hr or l/hr, dosing quantity, mA input being received by pump, and indication of external mode.

F. An AC inverter shall be integral to the microprocessor control and function of the pump. While 115VAC or 230VAC, 1 phase may be used to power the pump, the inverter shall drive a 1/4 HP, 230VAC, 3 phase motor. Stroke frequency shall be accomplished through microprocessor control with proportional start/stop of the motor, from 0% to 33% of stroke rate. Stroke rate shall be accomplished through variable speed of the motor from 34% to 100% of stroke rate. Stroke frequency control shall be manually adjusted by touch keypads, with the set stroke rate displayed on the LCD. The pump shall be capable of receiving a pulse input via optional external control cable such that one pulse gives one pump stroke rate. The pump shall be capable of remote ON-OFF operation using the pause function via a voltage free contact relay through an optional control cable. In addition, the pump shall be configured with;

((OPTIONAL SELECTIONS))

- pulse multiplier/divider functionality. The pump shall allow factoring to issue from 1 to 99.99 strokes per pulse input or to issue 1 stroke per 1 to 100 input pulses.

Or

- analog input functionality. The pump shall accept an analog signal such that stroke frequency is proportional to 4-20mA or 20-4mA, the choice of which is programmed at the pump. The pump shall allow the setting of a maximum stroke rate, which corresponds to the maximum analog signal, with stroke rate proportional to signal strength below that rate. Programming for curve processing shall also be possible, in which any stroke frequency ratio in proportion to the electrical signal can be configured. Analog to digital converters external to the pump shall not be acceptable.

Or

- pulse multiplier/divider and analog input functionality. The pump shall allow factoring to issue from 1 to 99.99 strokes per pulse input or to issue 1 stroke per 1 to 100 input pulses. The pump shall also accept an analog signal such that stroke frequency is proportional to 4-20mA or 20-4mA, the choice of which is programmed at the pump. The pump shall allow the setting of a maximum stroke rate, which corresponds to the maximum analog signal, with stroke rate proportional to signal strength below that rate. Programming for curve processing shall also be possible, in which any stroke frequency ratio in proportion to the electrical signal can be configured. Analog to digital converters external to the pump shall not be acceptable.

Or

- programmable timer functionality. The pump shall be configured with an integral, programmable 2-week, 81 event timer to change operational state of the pump. Timers external to the pump are not acceptable.

Or

- pulse multiplier/divider, analog input, and programmable timer functionality (as described above).

G. The pump shall be equipped with the programmable function of auxiliary frequency control, allowing for quick priming of the pump or for slug feed of process during initial start up after shutdown. Stroke frequency shall be programmable to the maximum for the pump, and the auxiliary frequency function shall be capable of interfacing with a contact closure relay for control purposes.

**2.6 FLOW ASSURANCE ((OPTIONAL))**

A. Low Level Control - A 2-stage Float Switch shall be supplied to stop the pump prior to losing prime and annunciate low level on the pump LED.

B. Relay Output - An SPDT relay shall be installed on the pump for:

((SELECT ONE))

- fault indication. ((OPTIONAL)). The metering pump shall have an integral relay to allow remote annunciation of a fault condition (i.e. low supply solution early warning/lack of supply solution shut down, loss of chemical output, system faults, and fuse/power supply failure). Configure as ((N/O//N/C)) contact closure relay.

Or

- both fault indication and pacing relay. ((OPTIONAL)). The metering pump shall have an integral relay to allow remote annunciation of a fault condition (i.e. low supply solution early warning/lack of supply solution shut down, loss of chemical output, system faults, and fuse/power supply failure). Configure as ((N/O//N/C)) contact closure relay. The pump shall also have an integral relay to issue a contact closure with every pump stroke to pace a second metering pump. The pacing relay shall be electrically isolated via an optical coupler with a semiconductor switch.

Or

- both 4-20mA output and fault indication. ((OPTIONAL)) The analog output function shall be a multiplicative factor of both stroke length % and stroke frequency %, reflecting the real time output capacity of the metering pump. The metering pump shall also have an integral relay to allow remote annunciation of a fault condition (i.e. low supply solution early warning/lack of supply solution shut down, loss of chemical output, system faults, and fuse/power supply failure). Configure as ((N/O//N/C)) contact closure relay.

Or

- both 4-20mA output and pacing relay. ((OPTIONAL)) The analog output function shall be a multiplicative factor of both stroke length % and stroke frequency %, reflecting the real time output capacity of the metering pump. The metering pump shall also have an integral relay to issue a contact closure with every pump stroke to pace a second metering pump. The pacing relay shall be electrically isolated via an optical coupler with a semiconductor switch.

**2.7 ACCESSORIES ((ALL ARE OPTIONAL AND MAY BE INCLUDED AS SEPARATE ITEMS OR AS COMPONENTS OF A PUMP STAND))**

A. The pump shall be mounted on a ((CHOOSE ONE: black, UV-protected polypropylene//304 stainless steel//FRP grating)) support stand suitable for wall, floor or top-of-tank mounting. A single chemical metering pump manufacturer shall be responsible for supplying and assembling all components of the skid, in addition to testing the skid-mounted metering system under conditions of maximum rated pump pressure, prior to shipment. The stand shall include the following accessories, pre-piped;

B. A foot valve and strainer shall be provided with each pump.

C. An injection check valve shall be provided with each pump.

D. A universal control cable with 5-pole round plastic connector and 5-wire cable with loose ends shall be provided with each pump.
E. A two-stage float switch compatible with the chemical metering pump shall be provided for monitoring tank level.
F. An adjustable discharge flow monitoring device mounted on a valved bypass shall be provided. The flow monitor shall be capable of signaling a fault condition to the metering pump.
G. A diaphragm failure detector shall be provided to ((open/close)) a contact in the event of diaphragm failure.
H. An adjustable-pressure, diaphragm-type back pressure/antisiphon valve shall be provided with each metering pump.
I. An in-line, adjustable-pressure, diaphragm-type pressure relief valve shall be provided with each metering pump.
J. An air-charged, bladder-type pulsation dampener shall be provided with each metering pump.
K. A clear PVC calibration column with FNPT fittings top and bottom shall be provided with each pump//skid.

**2.8 APPLICATION**

A. Quantity:
B. Chemical Service:
C. Capacity (U.S. gph):
D. Back Pressure (psig):

**END OF SECTION**

**((THIS IS A MASTER, EDIT FOR SPECIFIC APPLICATION))**
**PROMINENT FLUID CONTROLS, INC.**
**- SIGMA HK ((for flow rates from 0.12 gpd to 20 gph (basic) or to 17.2 gph (control))**

**SECTION _____- CHEMICAL METERING PUMPS**

**1.1 APPLICATION**

A. Quantity:_____
B. Chemical Service:_____
C. Tag. Nos.:_____
D. Capacity (US gallons per hour)_____
E. Backpressure (psig):_____

**1.2 DESCRIPTION**

A. The chemical metering pump(s) shall be a simplex, motor-driven, reciprocating, packed plunger type. The pump shall include integral motor, oil-lubricated gear reducer and cam-and-spring drive mounted in an aluminum housing, such housing to be sealed into an outer plastic housing for corrosion protection with heat sink fins for cooling.
B. The chemical metering pump manufacturer shall provide a two year warranty on the pump drive and one year warranty on the pump liquid end, including packed plunger and O-rings.
C. The pump shall be fully tested to meet rated flow and pressure by the manufacturer.
D. The power supply shall be ____ VAC, ____ Hz, _____phase.

**1.3 LIQUID END**

- The liquid end shall be 316 stainless steel. The suction and discharge valve shall be 316 stainless steel with PTFE-faced Viton® gasket seals and stainless steel valve balls.

**1.4 CONTROL**

A. Stroke length control ((SELECT ONE))
- shall be adjustable manually by means of a stroke length knob, in increments of 1%, from 0% to 100% of stroke length.
- shall be adjustable by means of a stroke positioning motor from 0% to 100% of stroke length. The stroke positioning motor shall feature visual stroke length indication and adjust in proportion to a 4-20 mA signal.

B. Stroke frequency control ((SELECT ONE))
- shall be fixed at the pump's maximum stroke rate. Pump shall include a 1/3 HP, TEFC, four-pole AC motor.
- shall be switchable between manual or external control via 4-20 mA signal. In manual mode, stroke frequency control shall be manually adjusted by touch keypads, with the set stroke rate displayed on the pump's LCD. In external mode, the pump shall be capable of receiving a 4-20 mA input via optional external control cable. . The pump shall allow setting of a maximum stroke rate which corresponds to the maximum analog signal, with stroke rate proportional to signal strength below that rate. The metering pump shall be capable of remote ON-OFF operation using the PAUSE function via a voltage-free contact relay through an optional control cable.
- shall be switchable between manual or external control via pulse signal. In manual mode, stroke frequency control shall be manually adjusted by touch keypads, with the set stroke rate

displayed on the pump's LCD. In external mode, the pump shall be capable of receiving a pulse train input via optional external control cable. The metering pump shall allow factoring to issue from 1 to 99.99 strokes per pulse input or to issue 1 stroke per 1 to 100 input pulses. The metering pump shall be capable of remote ON-OFF operation using the PAUSE function via a voltage-free contact relay through an optional control cable.

**1.5 FLOW ASSURANCE** ((OPTIONAL))

A. Low Level Control - A 2-stage Float Switch shall be supplied to stop the pump prior to losing prime and annunciate low level on the pump LED.

B. Relay Output - An SPDT relay shall be installed on the pump for: ((SELECT ONE))

- Fault Indication - ((OPTIONAL)) the metering pump shall have an integral relay to allow remote annunciation of a fault condition (i.e. low supply solution early warning/lack of supply solution shut down, flow monitor, system faults, and fuse/power supply failure).
- Pacing Relay - ((OPTIONAL)) the metering pump shall have an integral relay to issue a contact closure with every pump stroke to pace a second PROMINENT metering pump.

**1.6 ACCEPTABLE MANUFACTURER:**

A. ProMinent Fluid Controls, Inc. model _____

B. Or pre-approved equal.

**1.7 ACCESSORIES ((ALL ARE OPTIONAL AND MAY BE INCLUDED AS SEPARATE ITEMS OR AS COMPONENTS OF A PUMP STAND))**

A. The pump shall be mounted on a ((CHOOSE ONE: Fiberglass Reinforced Plastic / Stainless Steel)) support stand suitable for wall, floor or top-of-tank mounting, and including the following accessories pre-piped and factory tested:

B. A universal control cable with 4 pole round plastic connector and 4-wire cable with loose ends shall be provided with each pump.

C. A two stage float switch compatible with the chemical metering pump shall be provided for monitoring tank level.

D. An adjustable discharge flow monitoring device mounted on a valved bypass shall be provided. The flow monitor shall be capable of signaling a fault condition to the metering pump.

E. A packing failure detector shall be provided to ((open/close)) a contact in the event of a failure.

**END OF SECTION**

# Sigma/2 Metering Pumps

## Special Notes

- S2Ba basic version:
  - Motor **not included** (56 C flange)
  - **No** control panel

- S2Ca control version:
  - Braking motor **included**
  - Includes a control panel for manual frequency adjustment or external control

- For external control (remote on/off, contact pulse, analog, auxiliary frequency) a ProMinent control cable is required.

- Foot valves and injection valves are **not included**. Please refer to High Flow Accessory Section.

- A pressure relief valve **is required** when pumping into a pressurized discharge line.

- Pulsation dampeners are recommended for applications where discharge lines are over 100 ft. or if hydraulic circumstances require it.

SULZER

# AHLSTAR end suction single stage centrifugal pumps

# AHLSTAR end suction single stage centrifugal pumps

*Since our very first designs in the mid 1980s up to the most recent state-of-the-art range, we have delivered more than 150'000 AHLSTAR pumps worldwide – all designed to exceed standard requirements and customer expectations.*

The AHLSTAR range, comprised of the A, N, W and E ranges, has been designed in accordance with ISO 5199 and ISO 2858 international standards, and has been even further developed to surpass market standards and ensure excellent performance and reliability.

A range

N range

W range

E range

# Hydraulic design simulation and full-scale testing laboratory

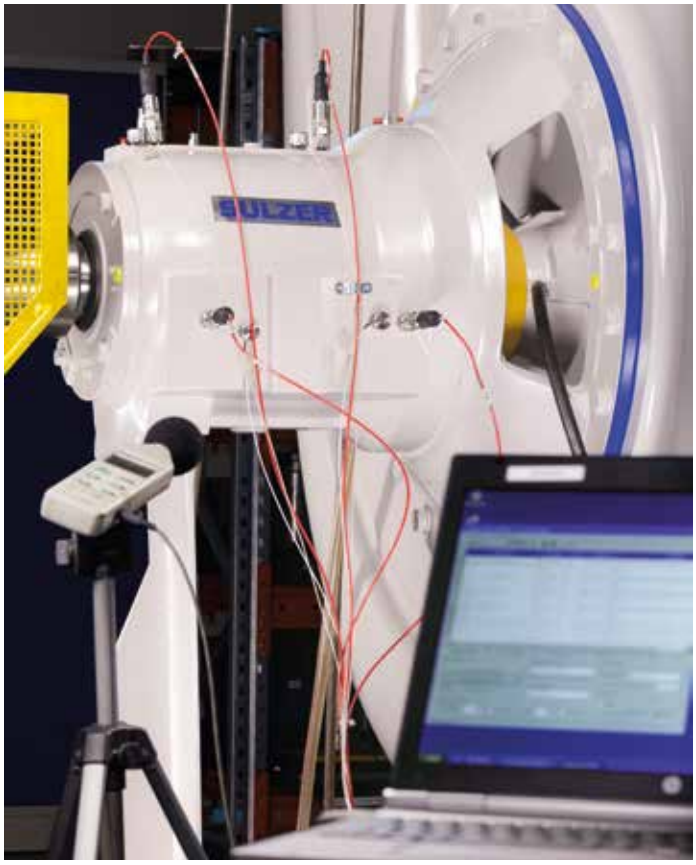


Through revolutionary methods, we have improved the performance and reliability of our pumps. Here at Sulzer, we place great emphasis on innovation and research and development. Using our own simulation tools, we can quickly analyze various hydraulic designs and then test the final design options in real operational conditions at our own full-scale laboratory.

# Hydraulic coverage for the most demanding applications

*AHLSTAR pumps have been designed to meet the most demanding hydraulic coverage requirements and for all types of liquid, making it the ideal range for challenging pumping operations.*

- Oil and gas
- Hydrocarbon processing
- Power generation
- Pulp, paper and board
- General industry
- Chemical process industry
- Water and wastewater

| Liquid | Temperature up to 210°C / 410°F | Pressure up to 16/25 bar / 230/360 psi | Gas content up to 70% | Liquid position below or above the pump | Corrosion pH from 0 to 14 |
|---|---|---|---|---|---|
| Clean and slightly contaminated liquids | ✓ | ✓ | ✓ | ✓ | ✓ |
| Viscous liquids | ✓ | ✓ | ✓ | ✓ | ✓ |
| Fibrous slurries | ✓ | ✓ | ✓ | ✓ | ✓ |
| Non-fibrous slurries | ✓ | ✓ | ✓ | ✓ | ✓ |
| Large solids containing liquids | ✓ | ✓ | ✓ | ✓ | ✓ |

# Features and benefits

**1 Versatile range of reliable and efficient EnerSave™ impellers**
- Reduces life cycle costs, energy consumption, operation time and downtime

**2 Innovative and reliable integrated degassing and self-priming units**
- For a variety of applications with difficult liquids
- Designed to help the centrifugal pump start quickly when the liquid level is below the pump in self-priming applications

**3 Robust, reliable and patented Rotokey impeller mounting**
- Enables fast and simple dismantling and reassembly
- Helps minimize maintenance costs

**4 Externally adjustable patented side plate**
- Allows fast and simple impeller clearance setting, thereby minimizing life cycle costs and ensuring continued high efficiency

**5 Patented balancing holes**
- Ensure efficient liquid circulation behind the impeller and in the seal chamber
- Guarantee optimum shaft seal performance by reducing unexpected shutdowns and minimizing operation and maintenance costs

**6 Proven WaterLess™ shaft seal**
- Effective dynamic, single and double mechanical seals and gland packing
- Fast and simple installation
- No measurement required

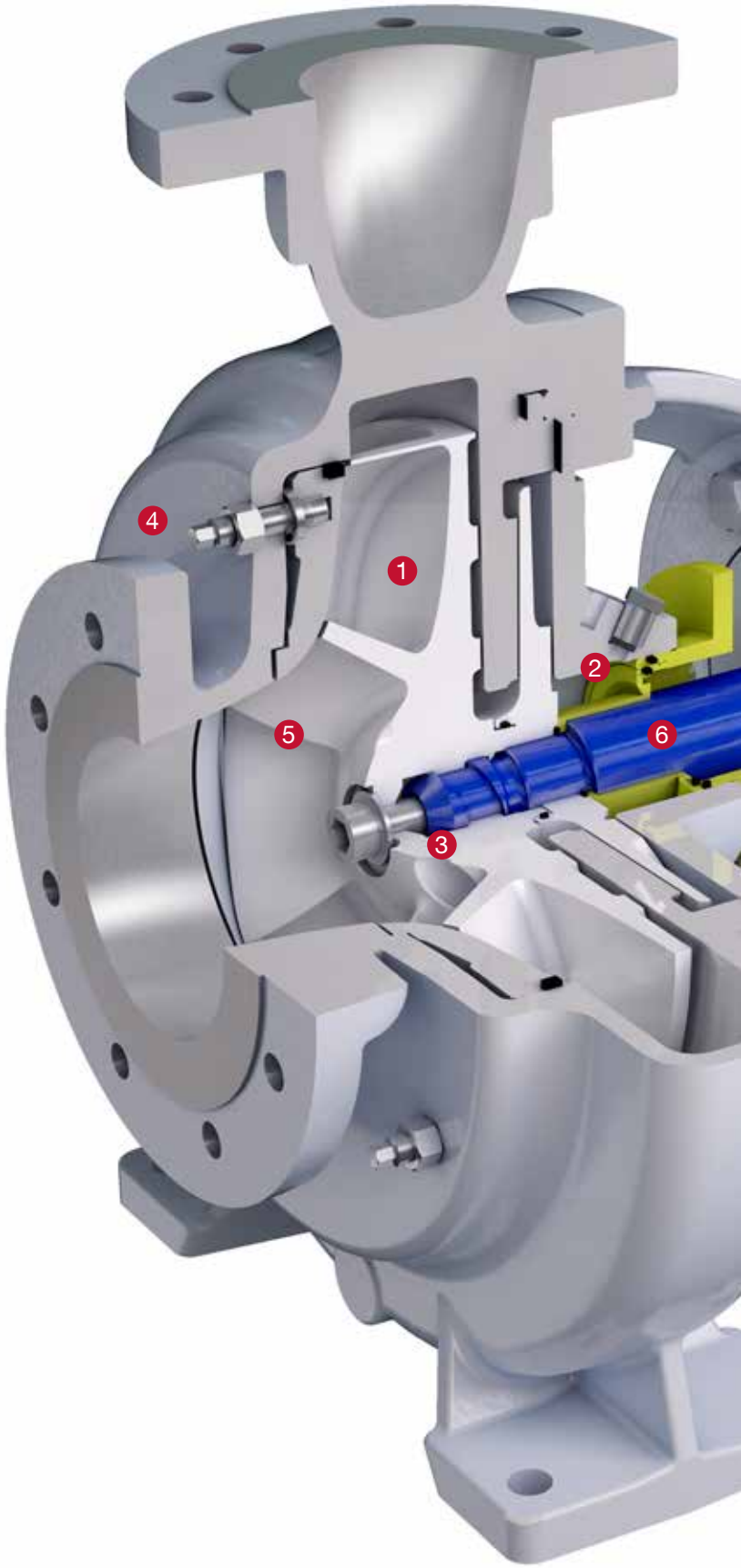

**7 Heavy-duty shaft**

- Reduces deflection at stuffing box to <0.05 mm / 0.002 in
- Helps extend shaft seal lifecycle and reduces unexpected shutdowns and maintenance costs

**8 Reliable bearing unit**

- Reliable, simplified, heavy-duty bearing unit minimizes unexpected shutdowns and reduces maintenance costs
- Includes oil and grease lubrication for all performance needs: grease lubrication for applications up to 120°C / 250°F; and oil lubrication for up to 180°C / 355°F

**9 Jackscrews**

- Enable simple dismantling and minimizes maintenance costs

AHLSTAR Long Coupled (LC) pump

**10 Standard IEC dimensioned flange or flange/feet electric motor with heavy-duty bearing unit**

- Shrink fitted sturdy shaft with the same dimensions as the AHLSTAR LC pump shaft
- Interchangeability of wet end and sealing unit components

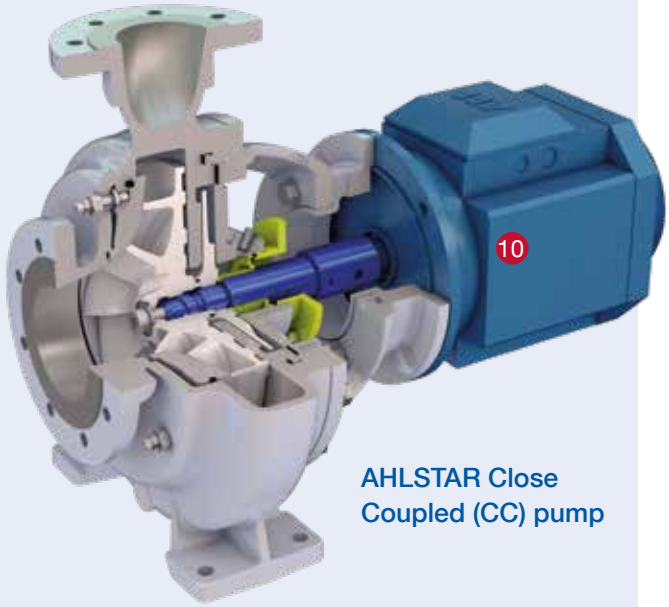


AHLSTAR Close Coupled (CC) pump

# AHLSTAR A range type A

## Operating data

| | |
|---|---|
| Capacities | 11’000 m³/h / 48’400 USgpm |
| Heads | 160 m / 525 ft |
| Temperatures | 180°C / 356°F |
| Frequencies | 50 or 60 Hz |
| Pressures | 16/25 bar, 230/360 psi depending on material and size |

## Impeller options

Low flow impeller

Open impeller

Special open impeller

Vortex impeller

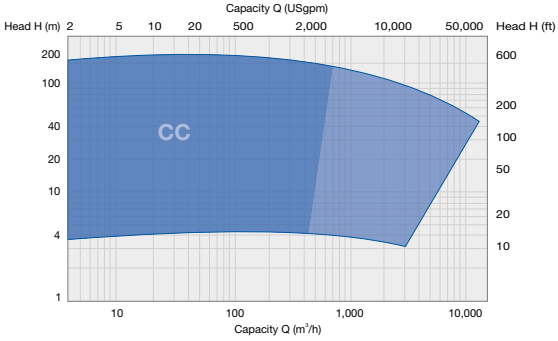


# AHLSTAR A range type APP/T

## Operating data

| | |
|---|---|
| Capacities | 9’000 m³/h / 39’600 USgpm |
| Heads | 160 m / 525 ft |
| Temperatures | 180°C / 356°F |
| Frequencies | 50 or 60 Hz |
| Pressures | 16/25 bar, 230/360 psi depending on material and size |

## Impeller options

Closed impeller

Open impeller

Special open impeller

Low pulse impeller

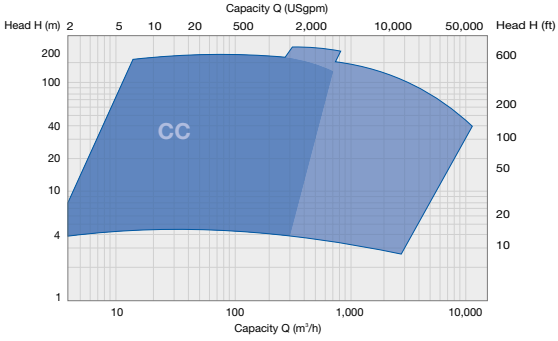

# AHLSTAR N range type NPP/T

## Operating data

| | |
|---|---|
| Capacities | 2’000 m³/h / 8’800 USgpm |
| Heads | 90 m / 295 ft |
| Temperatures | 180°C / 356°F |
| Frequencies | 50 or 60 Hz |
| Pressures | 16 bar / 230 psi depending on material and size |

## Impeller options

Non-clogging closed (channel type) impeller

Non-clogging vortex impeller

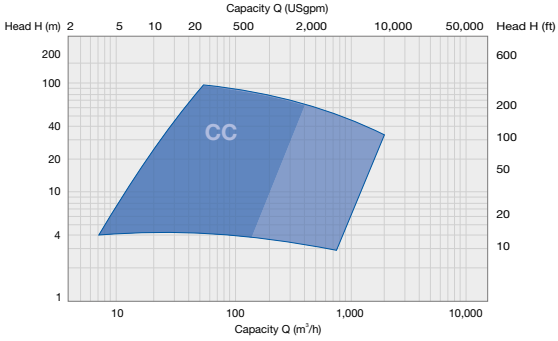


# AHLSTAR W range type WPP/T

## Operating data

| | |
|---|---|
| Capacities | 7’000 m³/h / 31’000 USgpm |
| Heads | 110 m / 360 ft |
| Temperatures | 180°C / 356°F |
| Frequencies | 50 or 60 Hz |
| Pressures | 16 bar / 230 psi depending on material and size |

## Impeller options

Wear-resistant closed impeller

Wear-resistant open impeller

Wear-resistant vortex impeller

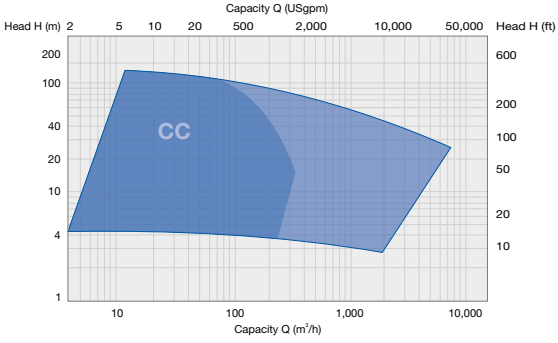

# AHLSTAR E range type EPP/T

## Operating data

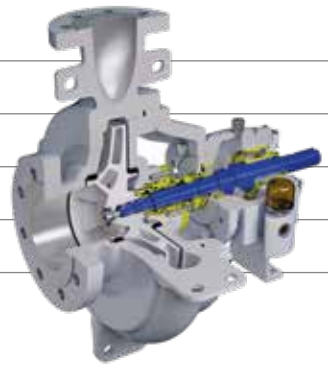

| | |
|---|---|
| Capacities | 6’100 m³/h / 26’860 USgpm |
| Heads | 160 m / 525 ft |
| Temperatures | 210°C / 410°F |
| Frequencies | 50 or 60 Hz |
| Pressures | 25 bar / 360 psi |

## Impeller options

Closed impeller

Open impeller

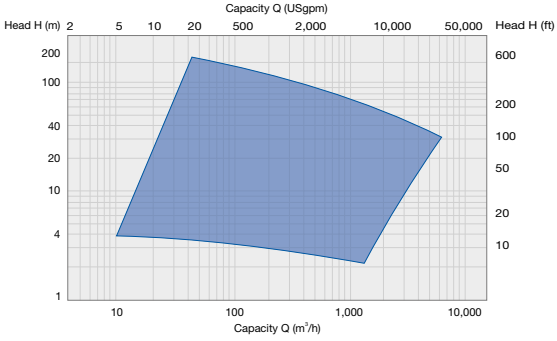

# Interchangeability

*All pumps in our AHLSTAR range have been standardized, using common modules and components, for maximum interchangeability and easy installation and maintenance. Fewer parts means lower inventory costs and greater process reliability.*

Common components and modules in AHLSTAR range types A, APP/T, EPP/T, NPP/T and WPP/T, with all options of gas separator GM, GS, R, self-priming LM and S, as well as CC designs are:

- 173 wet end sizes
- 24 sealing unit sizes with 7 common shaft seal sizes
- 7 common bearing units
- Common sealing water equipment
- Common couplings and coupling guards
- Common baseplates

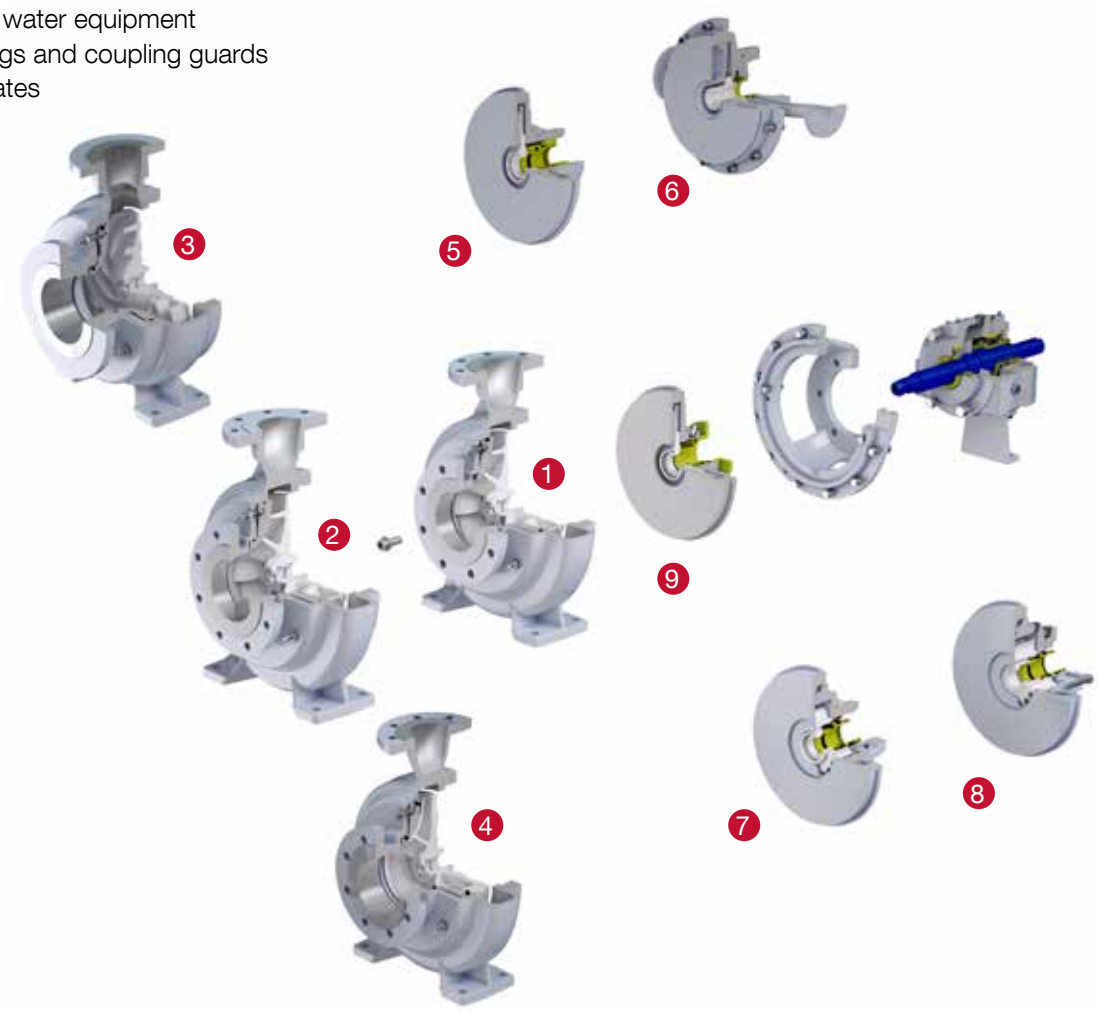


**Lower spare part inventory and higher process reliability with high interchangeability of wet ends, sealing units and bearing units**

1. A hydraulics
2. APP/T hydraulics
3. NPP/T hydraulics
4. WPP/T hydraulics
5. GM and GS design gas separator
6. R design air separating pump
7. LM design liquid ring pump
8. S design liquid ring pump
9. Versatile shaft seals

# Materials

| Stainless steel design | | | Nominal chemical composition % | | | | | |
|---|---|---|---|---|---|---|---|---|
| | | | C | Cr | Ni | Mo | Cu | N |
| Duplex | ASTM A890 3A | 41 | 0.06 max. | 24.0-27.0 | 4.0-6.0 | 1.75-2.5 | - | 0.15-0.25 |
| | ASTM A890 1B | 4L, EH* | 0.04 max. | 24.5-26.5 | 4.7-6.0 | 1.7-2.3 | 2.7-3.3 | 0.10-0.25 |
| | ASTM A890 5A | 4T | 0.03 max. | 24.0-26.0 | 6.0-8.0 | 4.0-5.0 | - | 0.10-0.30 |
| Austenitic | ASTM A743 CF-8 | 4C | 0.08 max. | 18.0-21.0 | 8.0-11.0 | - | - | - |
| | AVESTA 654 SMO [2] | 4U | 0.025 max. | 23.0-25.0 | 21.0-23.0 | 7.1-7.5 | 0.3-0.7 | 0.45-0.55 |
| Martensitic | ASTM A747 CB7Cu-2 | 4E | 0.07 max. | 14.0-15.5 | 4.5-5.5 | - | 2.5-3.2 | - |
| Ferritic | ASTM A743 CC50 (mod) | ER** | 0.25-0.35 | 29.0-30.0 | 1.50-3.00 | 1.50-3.00 | 1.00-1.50 | 0.10-0.20 |
| **Carbon steel, cast iron, titanium design [5]** | | | **C** | **Cr** | **Ni** | **Mo** | **Cu** | **Other** |
| Cast iron [3] | ASTM A48 CL 35 B | 53 | - | - | - | - | - | - |
| Chromium iron [4] | ASTM A532 IIIA | 5B | 2.0-3.3 | 23.0-30.0 | 2.5 max. | 3.0 max. | 1.2 max. | Si 1.5 max. |
| Carbon steel | ASTM A216 WCB | 46 [1] | 0.30 max. | 0.50 max. | 0.50 max. | 0.20 max. | 0.30 max. | Mn 1.0 max.<br>Si 0.6 max. |
| Titanium | ASTM B367 C-3 | 75 [1] | - | - | - | - | - | - |
| **Material alternatives for other parts** | | | | | | | | |
| Gasket material | Reinz AFM34 | Y6 | Used in temperature range -50°C/-58°F...+250°C/+482°F | | | | | |
| | PTFE/Glass | 84 | Used in temperature range -190°C/-310°F...+240°C/+464°F | | | | | |
| O-ring material | EPDM | 92 | Used in temperature range -50°C/-58°F...+150°C/+302°F | | | | | |
| | FKM | 93 | Used in temperature range -20°C/-4°F...+200°C/+392°F | | | | | |

[1] Currently available on limited sizes
[2] AVESTA 654SMO is a trademark owned by Outokumpu Stainless which has granted Sulzer licence to produce this material
[3] Type APP/T pumps
[4] For W range (5B/4E) and full 5B
[5] Other corrosion resistant cast steels available on request
* EH precipitation hardened to c. 300HB
** ER for W range impeller and sideplate

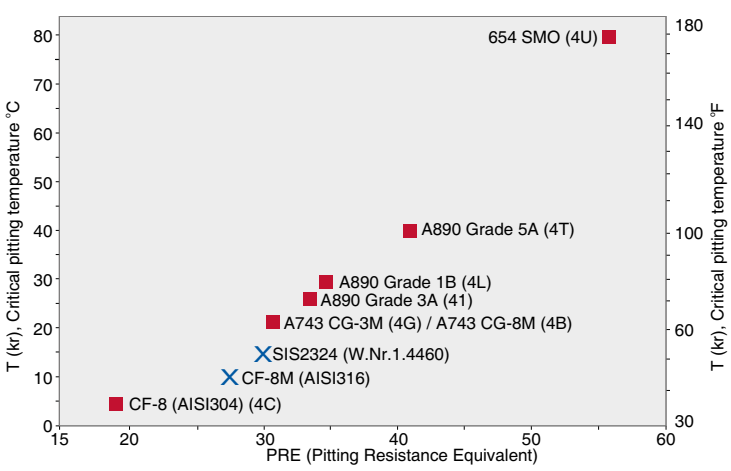


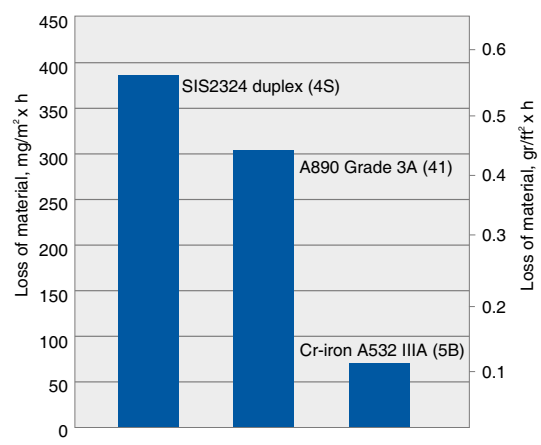


## Corrosion resistance

- Ferric chloride solution test; ASTM G-48
- X = typical other materials used in process industry (e.g. PPI)

## Wear resistance

- Abrasion and corrosion test
- White liquor and lime mud +95°C / 203°F ±22°C / 40°F, 100 g/l / 0.835 lb/gal quartz sand (Stora Enso Pulp)
- Accuracy in the test ±21 mg/m² x h / 0.03 gr/ft² x h

# Degassing and self-priming units

*AHLSTAR pumps can be fitted with self-priming or degassing units, to enable the pump to be started with an empty inlet pipe and to allow it to pump liquids with high gas content.*

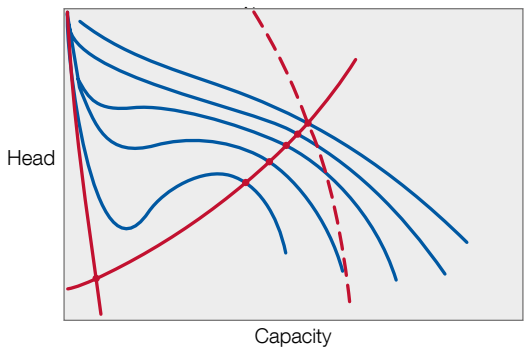


Conventional centrifugal pumps, regardless of impeller type, can operate with a gas content of up to 4%. However, once the gas content exceeds 4%, bubbles start to accumulate in the impeller eye and impair operations. This reduces capacity and pumping becomes extremely unstable.

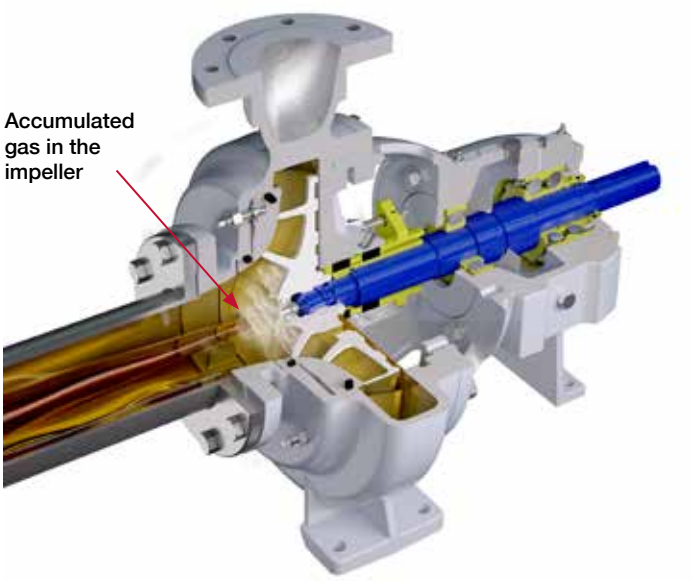


AHLSTAR degassing and self-priming units, such as the LM or S liquid ring pump and the GM, GS or R gas separator units, stabilize the pumping of liquids containing up to 40% weakly bonded gases or up to 70% strongly bonded gases using centrifugal pumps.

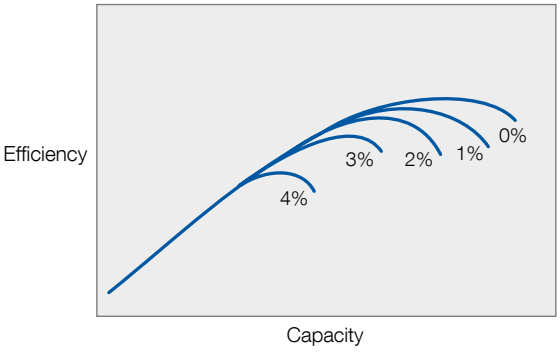


The difference in pressure between the pump inlet and the degassing unit outlet or the internal liquid ring pump eliminates gas bubbles from the impeller and thus stabilizes the system and significantly increases pump efficiency.

# Degassing and self-priming solutions

## Positive inlet head

AHLSTAR pump with LM or S integrated liquid ring pump degassing unit

- For reliable pumping of gases containing liquids in unstable inlet head applications
- Single or double mechanical seal with recirculation flushing for clean liquids or with external flushing for fibrous and non-fibrous slurries and liquids containing large solids
- When the inlet head is stable, GS, GM and R gas separator degassing units provide reliability and efficiency

## Low or negative inlet head

AHLSTAR pump with LM or S integrated liquid ring pump

- Most reliable system for pumping gases containing liquids in low or negative inlet head applications
- Single mechanical seal with external flushing for clean, viscous, fibrous or non-fibrous slurries and liquids containing large solids
- Double mechanical seal for pumping liquids that are suitable for liquid ring flushing
- GM, GS or R gas separator degassing units without external vacuum pump cannot be used due to low or negative inlet head

## Replacing the barometric leg

AHLSTAR pump with a GM or R gas separator unit

- Simplifies expensive classic barometric leg pumping systems and ensures consistent and reliable operation
- Deep wells, high buildings and long pipes with vertical or submersible pumps and liquid level control systems can be avoided, thereby minimizing initial costs
- Single mechanical seal with recirculation flushing for clean liquids or with external flushing for fibrous or non-fibrous slurries
- Double mechanical seal for fibrous or non-fibrous slurries

## Self-priming pump applications

AHLSTAR pump with the LM or S integrated liquid ring pump degassing unit

- Ensures fast, reliable pump start-up and constant operation when starting with an empty inlet pipe
- Single mechanical seal with recirculation flushing for clean liquids, requires gooseneck inlet pipe
- Single mechanical seal with external flushing for fibrous or non-fibrous slurries and liquids containing large solids

# Shaft Seals

*Customized shaft seals for particular liquids and applications help reduce operational costs and minimize downtime.*

As Sulzer shaft seals require less or no water, they optimize operational and environmental cost reductions. Furthermore, our standardized, easy to understand designs shorten installation time, reduce maintenance costs and increase reliability.

Patented impeller balancing holes, together with the back vanes, improve liquid circulation and prevent clogging, creating ideal conditions behind the impeller and in the optimal seal chamber.

## Trusted sulzer dynamic seal

- Custom-designed for fibrous slurries, but also suitable for clean, viscous or non-fibrous slurries and liquids containing large solids
- No external sealing water required, and it does not leak
- Suitable for applications with positive pump inlet head and a temperature below boiling point in atmospheric pressure
- More than 50’000 dynamic seals have been installed since 1987, proving its popularity and reliability

## Self-venting throttled seal chamber Sulzer integrated single mechanical seal

- Ideal for clean liquid applications with a negative pump suction head with internal flushing
- High temperatures, up to 140°C / 285°F
- The impeller can be equipped with or without balancing holes
- Suitable also for non-fibrous slurries with external sealing liquid flushing preventing abrasive particles from penetrating the mechanical seal faces
- External flushing is mixed into the pumped liquids
- Temperatures of up to 180°C / 355°F

## Optimal bore Sulzer integrated single mechanical seal

- Custom-designed for fibrous slurries up to 8% consistency without flushing water, with positive pump suction head and specially designed patented impeller balancing holes
- Suitable for clean or viscous liquids and liquids containing large solids
- Liquid temperatures of 10°C / 20°F below boiling point in atmospheric pressure

## Optimal bore Sulzer integrated double mechanical seal

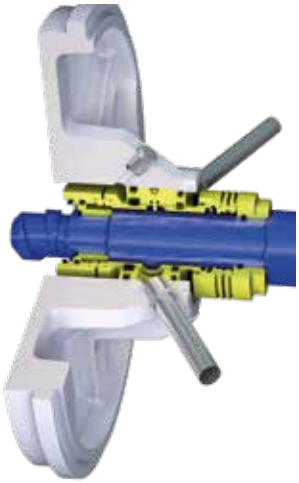

- Designed for all consistencies and concentrations of clean, viscous or fibrous slurries, non-fibrous slurries and liquids containing large solids
- Negative or positive pump suction head
- The impeller can be equipped with or without balancing holes
- In applications where abrasive non-fibrous and large solids containing liquids are pumped, the impeller typically does not have balancing holes
- Temperatures of up to 180°C / 355°F

## Ready-fitted mechanical seals

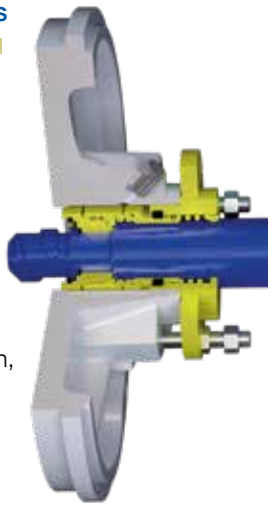

- Designed for standard stuffing box case cover
- More space in seal chamber because no shaft sleeve needed meaning lower cost
- Strong and solid design
- Single and double seal options
- Typical manufacturers: John Crane Safematic, EagleBurgmann, etc.

## Cartridge mechanical seals

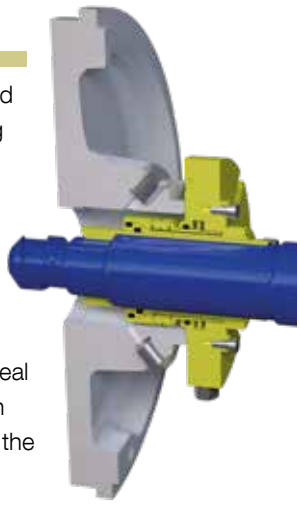

- Originally, and usually, designed for the standard gland packing stuffing box
- Complex design due to the limited space of the standard gland packing stuffing box seal chamber
- Challenging installation due to the limited space around the seal
- Often requires extra installation adapter between the seal and the stuffing box cover
- Suitable for basic applications
- Can be designed in accordance with ISO 5199 or API 682 standards
- Single and double seal options
- Typical manufacturers: John Crane Safematic, EagleBurgmann, Chesterton, AES, etc.

## Standard element mechanical seals

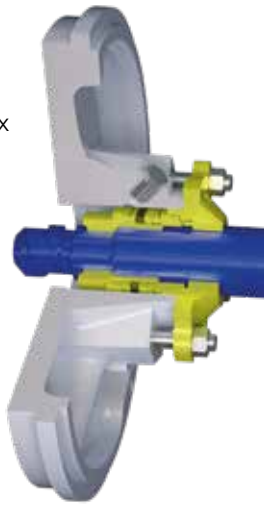

- Designed for standard stuffing box case cover
- Requires shaft sleeve and seal housing
- Standard dimensions (L1K) for seals
- Suitable only for light-duty applications, e.g. clean liquids, low pressure, low temperature
- Single and double seal options
- Typical manufacturers: John Crane Safematic, EagleBurgmann, etc.

## Classic gland packing

- Designed in accordance with ISO dimension standards
- Classic standard stuffing box case cover
- Requires a sleeve to protect the shaft from corrosion and wear
- Reliable operation, but small (50 drops/minute) leakage required by seal/sleeve lubrication
- Requires regular supervision and maintenance
- Suitable only for light-duty applications, e.g. clean liquids, low pressure, low temperature
- Easy maintenance, without having to open the pump, due to a split gland design

# Sealing water equipment

*Sulzer sealing water equipment regulates the volume and pressure of external sealing water for optimum pump performance. The equipment is attached directly to the supply connection using a hose or pipe/tube.*

## Automatic constant flow sealing water equipment

- Suitable for single or double mechanical seals and gland packings
- Incoming water supply pressure must be at least 0.5 bar / 7 psi higher than in the seal chamber
- Automatically regulates the volume of sealing water to a constant 2 l/min / 0.5 USgpm

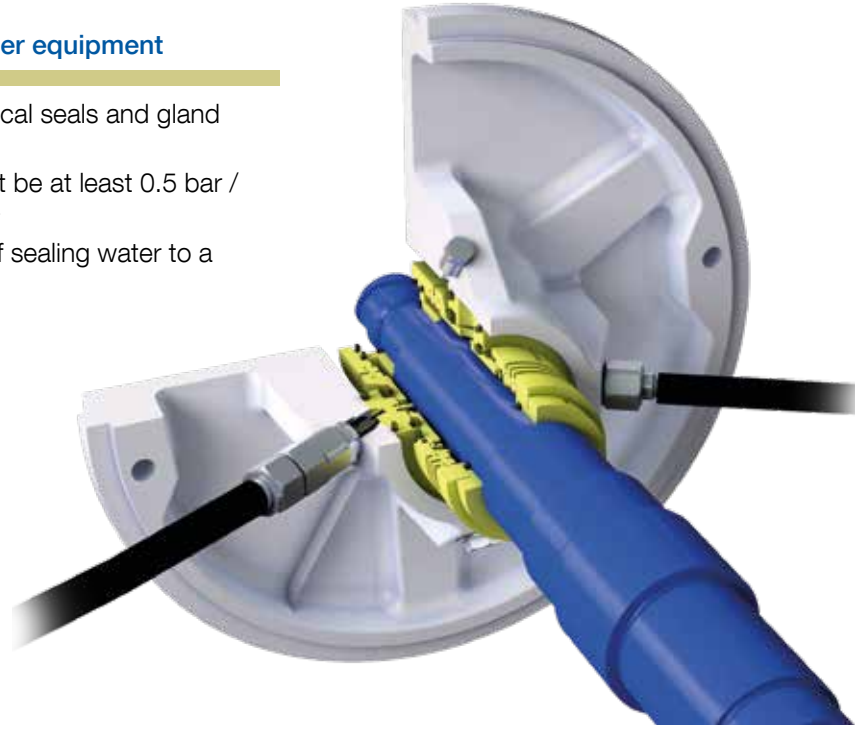

## Classic adjustable sealing water equipment

- Suitable for single or double mechanical seals and gland packings
- Incoming water supply pressure must be at least 0.5 bar / 7 psi higher than in the seal chamber
- The volume of sealing water can be regulated via the control valve on the sealing water equipment, typical value is 3 - 5 l/min / 0.8 - 1.3 USgpm

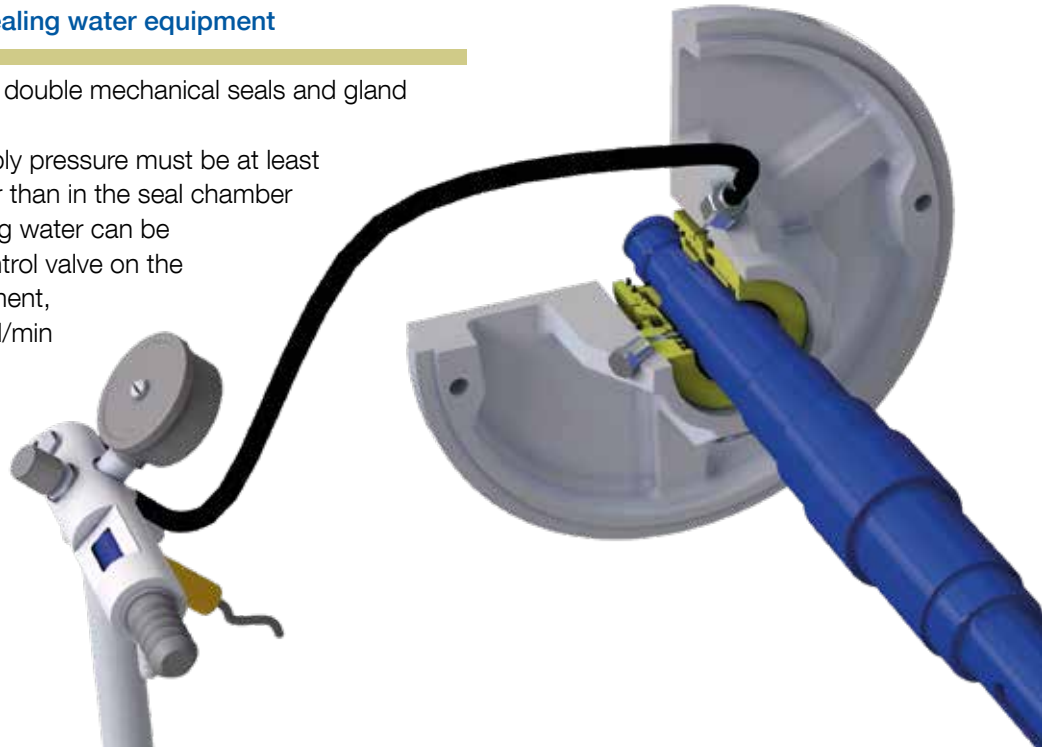

## Sulzer integrated smart flow sealing water equipment

- Suitable for double mechanical seals
- Automatically reduces the volume of sealing water to the minimum required
- Incoming water supply pressure must be at least 0.5 bar / 7 psi higher than in the seal chamber
- Potential water savings of up to 90%, compared to standard sealing water equipment
- The seal chamber must be ventilated before use

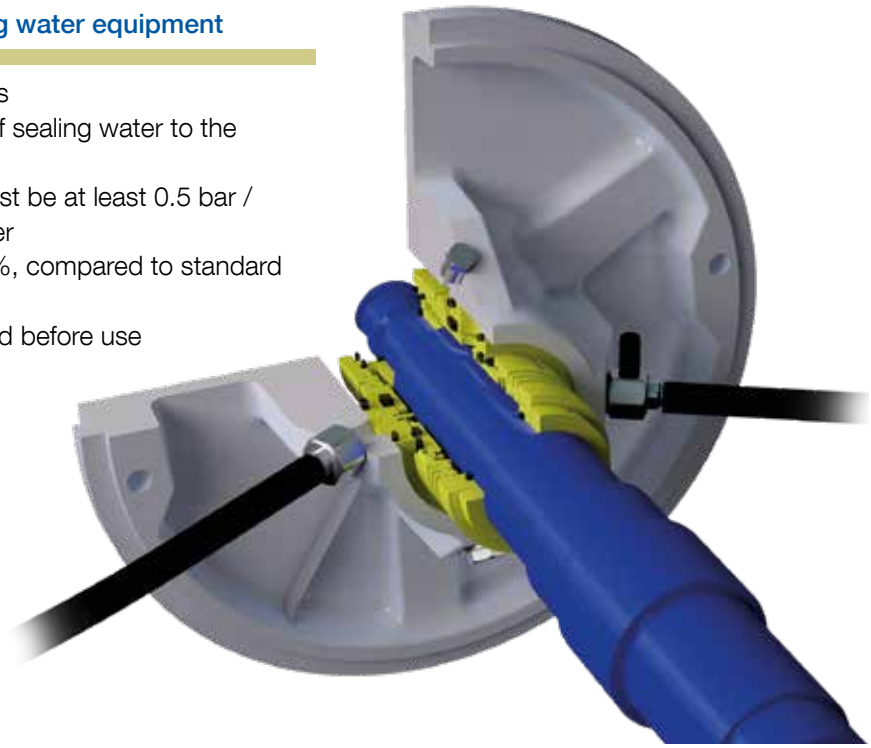

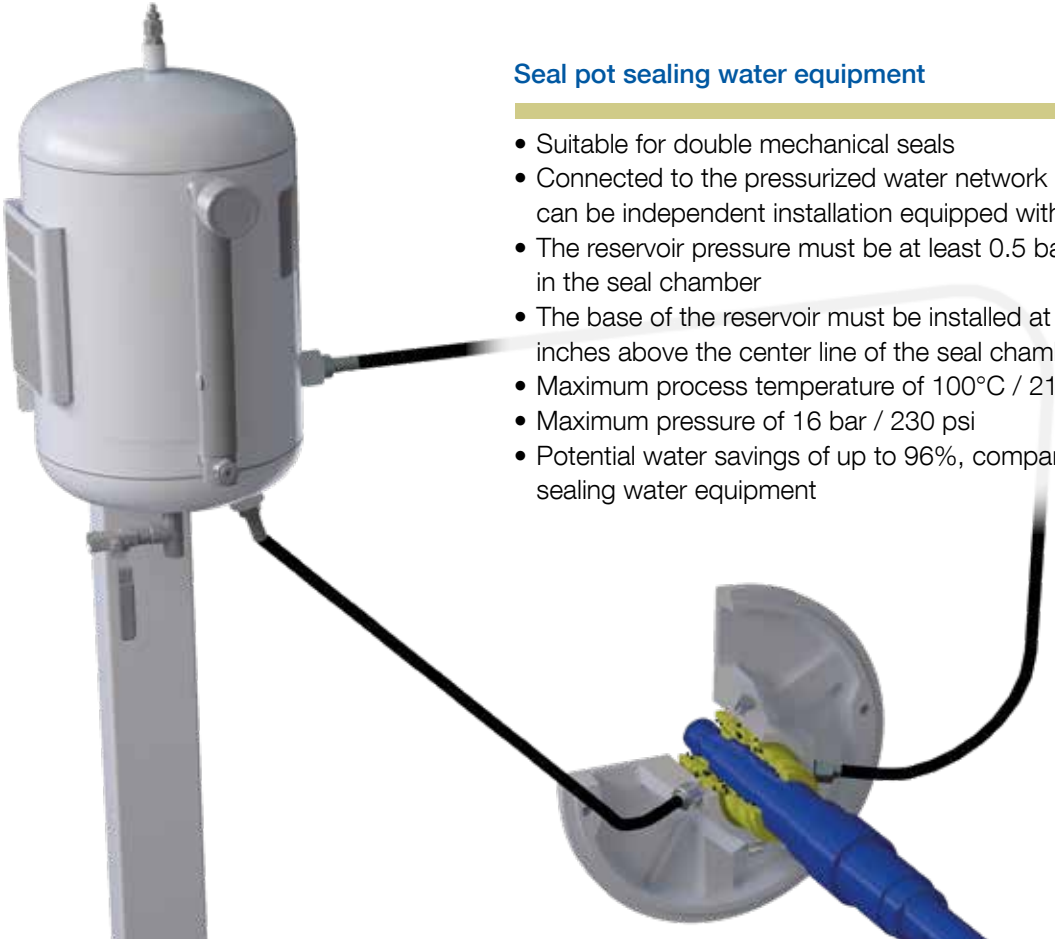

## Seal pot sealing water equipment

- Suitable for double mechanical seals
- Connected to the pressurized water network or gas network, or can be independent installation equipped with hand pump
- The reservoir pressure must be at least 0.5 bar / 7 psi higher than in the seal chamber
- The base of the reservoir must be installed at least 500 mm / 20 inches above the center line of the seal chamber
- Maximum process temperature of 100°C / 212°F
- Maximum pressure of 16 bar / 230 psi
- Potential water savings of up to 96%, compared to standard sealing water equipment

# Heavy-duty bearing units

*Sulzer's AHLSTAR bearing units are reliable, simplified and heavy-duty, resulting in minimized unexpected shutdowns and reduced downtime and maintenance costs.*

- Designed with the minimum number of components, making assembly fast and simple
- Heavy-duty shaft minimizes deflection at stuffing box < 0.05 mm / 0.002 in, thereby extending the life cycle of the shaft seal
- With oil bath, oil splash and grease lubrication for versatile applications, oil bath or oil splash lubrication for applications up to 180°C / 355°F and grease lubrication up to 120°C / 250°F
- The strong, over-sized bearing design far exceeds the ISO 5199 standard life cycle of 17,500 hours
- A sturdy support foot provides a solid base and prevents coupling alignment changes

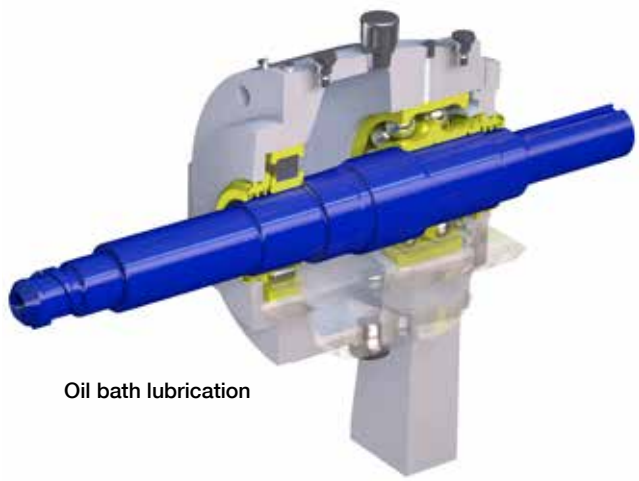

Oil bath lubrication

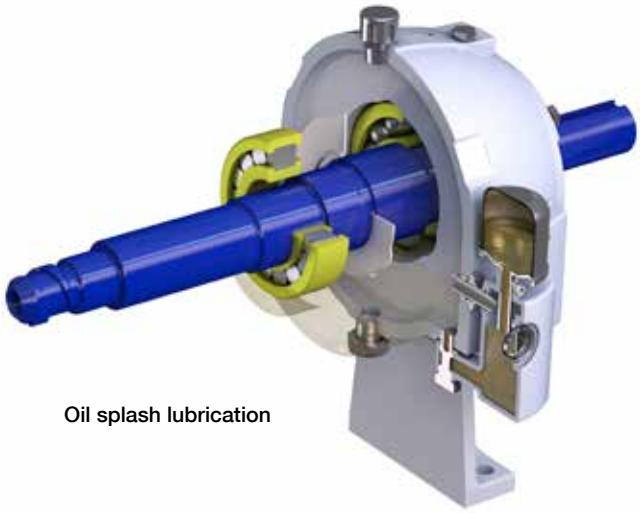

Oil splash lubrication

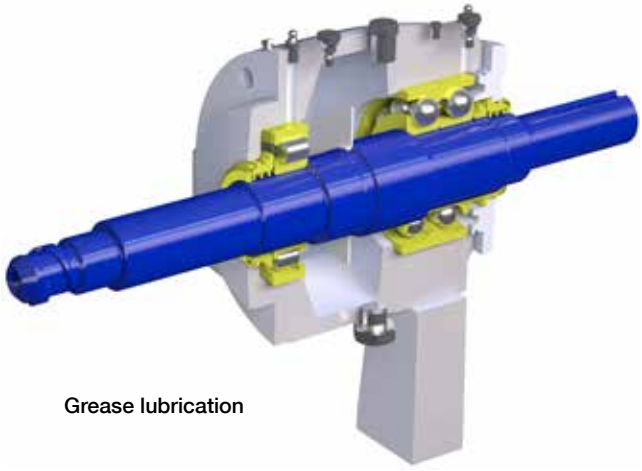

Grease lubrication

### Innovative bearing isolators

Sulzer's innovative, non-contacting bearing isolators at the both ends of the bearing house consist of three elements: a deflector, a lip seal and a labyrinth. This triple bearing protection prevents lubricant leaks from the bearing house and keeps contaminants out. No contact between the lip seal and shaft when the pump is rotating also means no wear, which extends the lifecycle of the unit.

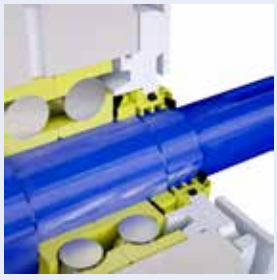

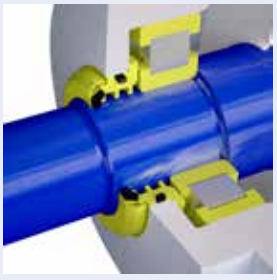

# Superior design minimizes lifecycle costs

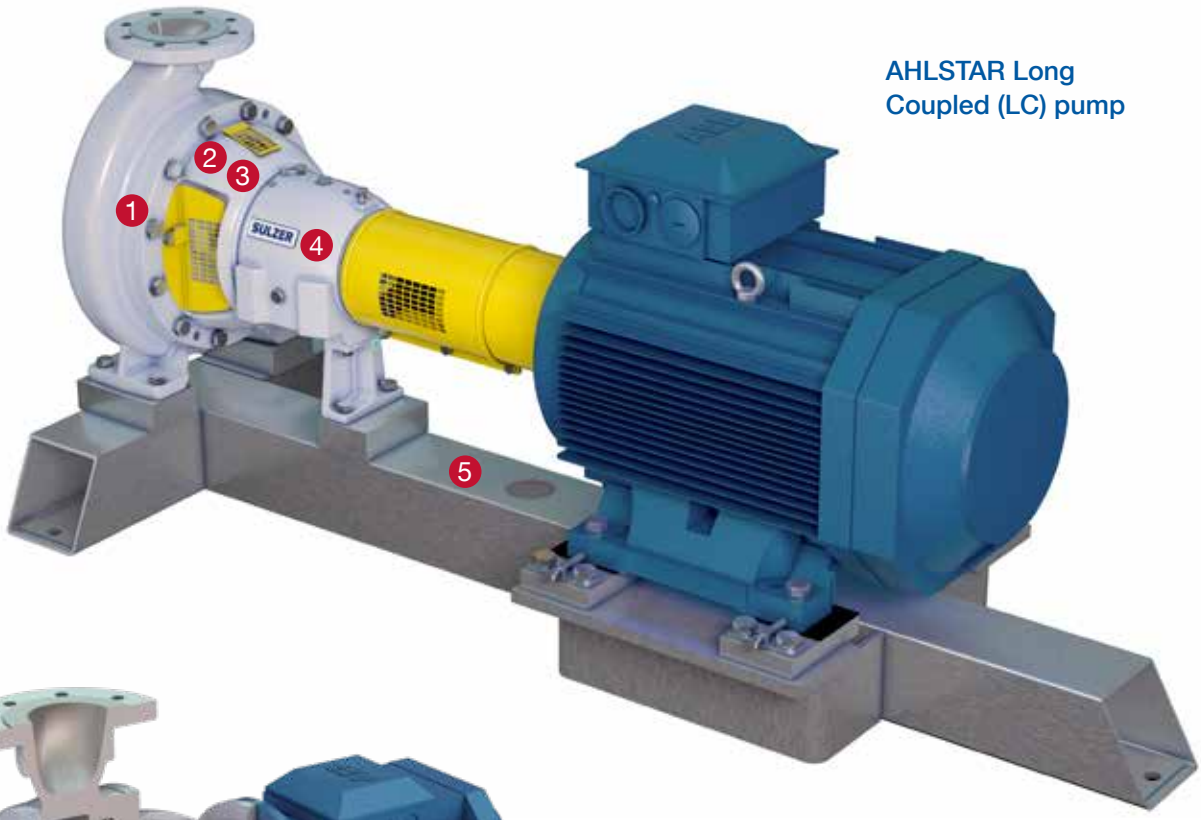


AHLSTAR Long Coupled (LC) pump

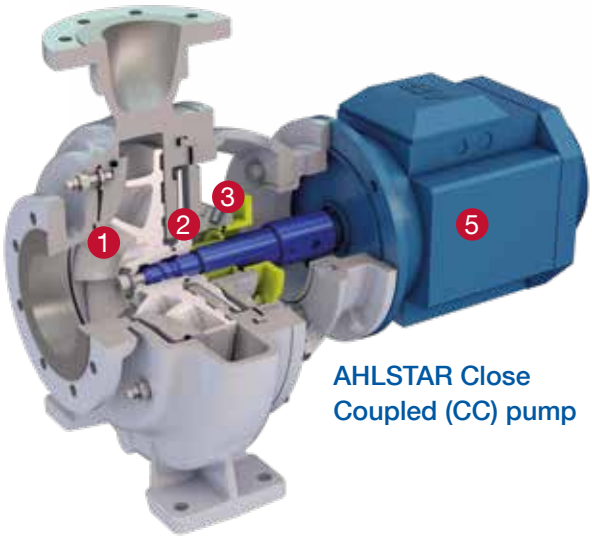


AHLSTAR Close Coupled (CC) pump

1. Sulzer EnerSave™ impellers
2. Sulzer WaterLess shaft seals units
3. Innovative degassing and self-priming units
4. Reliable bearing units
5. Fast and simple installation

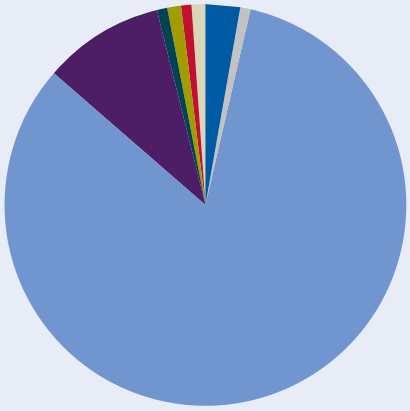

**Typical distribution of Life Cycle Costs (LCC)**

- Initial cost
- Installation cost
- Energy cost
- Operation cost
- Maintenance cost
- Downtime cost
- Environmental cost
- Decomissioning cost

# Versatile installation options

## Fast and simple installation of Long Coupled (LC) pumps with T-frame baseplates

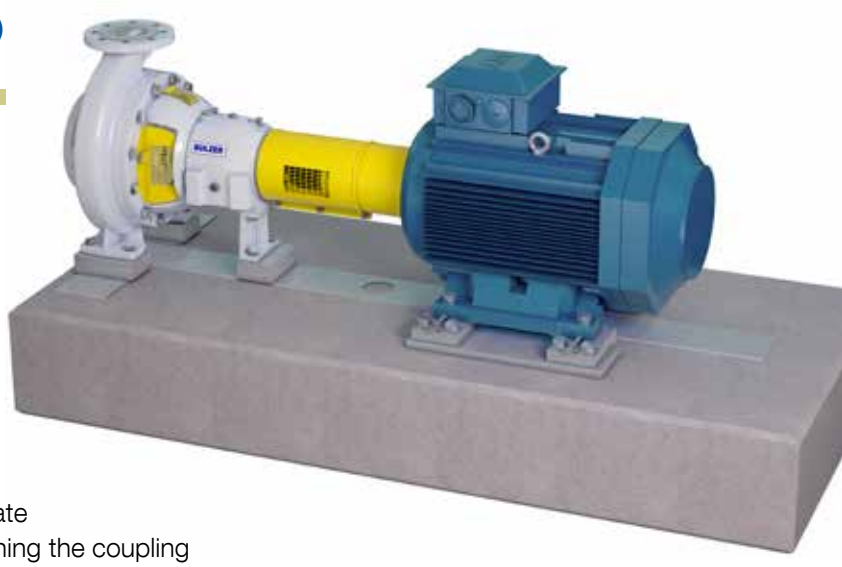

- The purpose of the baseplate is to facilitate installation of the pump-motor combination at the installation site
- The robust and rigid baseplate supports the substantial load of the piping and drive motor
- The baseplates have been designed to accommodate the next size of frame on the same baseplate
- Galvanized riser blocks as standard enable installation of the next size of drive motor frame, when required
- Stainless steel alignment blocks as standard facilitate fast and simple adjustment of the motor when aligning the coupling
- Alternative foundation bolts available, depending on application (welded, grouted or chemical anchors)

## Classic installation of Long Coupled (LC) pumps with grouted Sulzer ISO and API rectangular baseplates

- ISO and API standard rectangular baseplates are grouted into the concrete foundation
- Possible leaks are collected on the baseplate
- Galvanized riser blocks as standard enable installation of the next size of drive motor frame, when required
- Stainless steel alignment blocks as standard facilitate fast, simple adjustment of the motor when aligning the coupling
- Alternative foundation bolts available, depending on application (welded, grouted or chemical anchors)

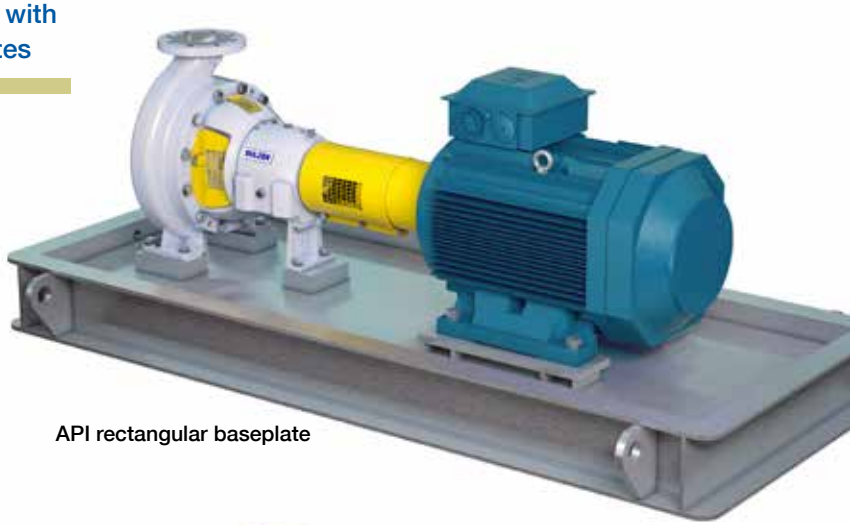

API rectangular baseplate

ISO rectangular baseplate

## Fast and simple and space-saving installation of Close Coupled (CC) pumps without baseplate

- Installation directly on the floor or installation rig without a baseplate is simpler, faster and more economical
- No need for coupling alignment, making the installation even faster, simpler and more economical
- Standard IEC dimensioned heavy-duty bearing motors in sizes IEC 90 to 280 as standard
- IMB5 flange motors for low-power applications and IMB35 flange/ feet motors for high-power applications
- AHLSTAR sizes 10, 11, 20, 21, 22, 23, 31, 32, 33 with all wet end and sealing unit options are available with the close coupled design

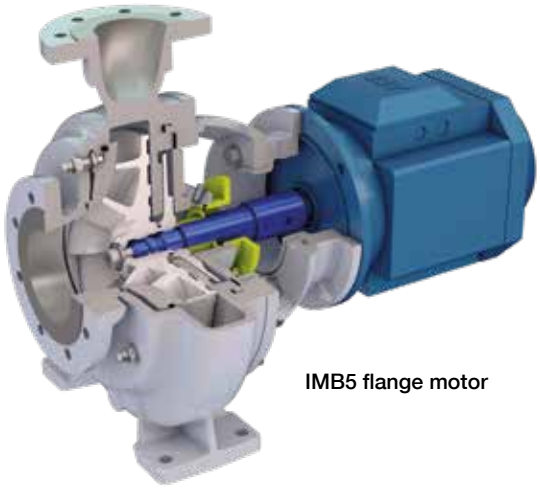

IMB5 flange motor

IMB35 flange/feet motor

# Surface treatment options

### Internal surface treatment
- Standard surface cleaning for normal applications
- Ground Ra 6.3 surfaces
- Cotton ball tested surfaces
- Hardening with plasma nitration
- Cleaning for peroxide applications
- Cleaning for drinking water applications

Special inside surface treatment on request.

### External surface treatment
- ISO 12944-2 C4 painting for normal applications
- ISO 12944-2 C4 painting for high temperatures >150°C /300°F applications
- ISO 12944-2 C5M painting for marine applications

Special external treatment available on request.

# Tests and certification options

### Performance tests
- Capacity, head, efficiency and NPSHr tests in accordance with ISO 9906:2012 / HI 14.6-2011
- Noise tests
- Vibration test in accordance with ISO 5199
- Mechanical tests in accordance with HI 14.6:2011
- Pressure pulsation test

### Material and NDT tests
- EN 10204.2.2 and 3.1
- Liquid penetration in accordance with ISO 1371-1 level 3
- Magnetic particle examination in accordance with ISO 1369 level 3
- PMI positive material identification

### Structural tests
- Balancing of impellers in accordance with ISO 1940 grade 6.3 and 2.5 static and dynamic
- Hydrostatic pressure test in accordance with ISO 5199:2002

### Inspection of assembly
- Dimensional checking of installation
- Dimensional checking of clearances
- Paint film thickness checking
- Final assembly checking

Customized tests available on request.

# Products and operation fullfill versatile international standards and directives

| | | |
|---|---|---|
| **Legislation** | Directive 2006/42/EC | Machinery directive |
| | Directive 93/68/EEC | CE Marking |
| | Directive 94/9/EC | Equipment and Protective systems intended for use in Potentially Explosive Atmospheres (ATEX)<br>Equipment categories II 2G and II 3G<br>Temperature classes T1-T4 |
| **Product safety** | EN 809:1998 + A1:2009 | Pumps and pump units for liquids – Common safety requirements |
| | EN ISO 12100-2010 | Safety of machinery<br>- General principles for design. Risk assessment and risk reduction |
| **Quality system** | EN ISO 9001:2008 | Quality management systems. Requirements. |
| **Environmental system** | EN ISO 14001:2004 | Environmental management systems<br>- Requirements with guidance for use |
| | OHSAS 18001:2007 | Occupational health and safety management systems. Requirements. |
| **Dimensions** | EN ISO 2858:2010 | End-suction centrifugal pumps (rating 16 bar)<br>- Designation, nominal duty point and dimensions<br>(up to size 44-200)<br>(not for EPP)<br>(only partly for CC-construction) |
| **Design** | EN ISO 5199:2002 | Technical specifications for centrifugal pumps – Class II |
| **Testing** | EN ISO 9906:2012<br>HI 14.6-2011 | Rotodynamic pumps – Hydraulic performance acceptance tests<br>- Grades 1E and 1B (Pump type A)<br>- Grade 2B (Pump type A, APP, NPP, WPP, EPP) |
| | EN 10204:2004 | Metallic products – Types of inspection docu-<br>ments<br>- Inspection document type 2.2<br>- Inspection document type 3.1 |
| | EN 735:1995 | Overall dimensions of rotodynamic pumps. Tolerances. |
| **Flange drilling** | ISO 7005-2:1988 | Metallic flanges<br>- Part 2: Cast iron flanges<br>- PN10, PN16 |
| | ASME B16.1:2010 | Grey Iron Pipe Flanges and Flanged Fittings<br>Class 25, 125, 250<br>- Class 125 |
| | ASME B16.5:2009 | Pipe flanges and flanged fittings<br>NPS ½ Through NPS 24<br>- Class 150, 300 |
| | JIS B 2220:2012 | Steel pipe flanges<br>- 10K, 16K, 20K, 30K |
| | JIS B 2239:2004 | Cast iron pipe flanges<br>- 10K, 16K |
| | EN 1092-1:2007 + A1:2013 | Flanges and their joints<br>- Part 1: Steel flanges<br>- PN10, PN16, PN25 |
| | EN 1092-2:1997 | Flanges and their joints<br>- Part 2: Cast iron flanges<br>- PN10, PN16 |

**www.sulzer.com**

E10083 en 5.2018, Copyright © Sulzer Ltd 2018
This brochure is a general presentation. It does not provide any warranty or guarantee of any kind. Please, contact us for a description of the warranties and guarantees offered with our products. Directions for use and safety will be given separately. All information herein is subject to change without notice.

SULZER

SPP id: 170201 / Replaces 141101 / en / **N32199** / 5

# AHLSTAR

## PROCESS PUMPS

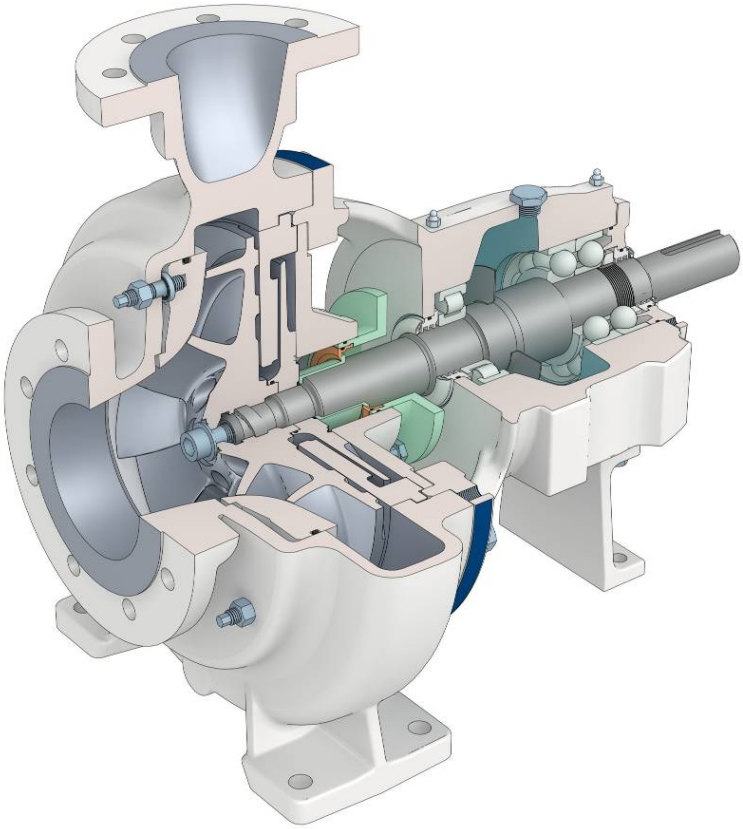

**Installation, operation and maintenance instruction**

**Intended use**
**Safety instructions**
**Hoisting and transportation**
**Commissioning**
**Installation at the site**
**Operation**
**Preventive maintenance**
**Corrective maintenance**
**Spare parts recommendation**


COPYRIGHT © SULZER PUMPS FINLAND OY

**Installation, operation and maintenance instruction**

| | | | | | |
|---|---|---|---|---|---|
| G | US | N32199 | Cover | Feb - 17 | |
| G | US | | Table of contents | | |
| G | US | N31792 | Intended use | Nov - 14 | |
| G | US | N31793 | Safety instructions | Feb - 17 | |
| G | | N31569 | Hoisting and transportation | Feb - 17 | |
| G | | N31570 | Commissioning | Sep – 11 | |
| G | US | N31794 | Installation at the site | Feb - 17 | |
| G | US | N31795 | Operation | Feb - 17 | |
| G | US | N31796 | Preventive maintenance | Feb - 17 | |
| G | US | N32200 | Corrective maintenance | Sep - 14 | |
| G | US | N31798 | Spare parts recommendation | Jun – 12 | |


COPYRIGHT © SULZER PUMPS FINLAND OY

SULZER

SPP id: 141101 / Replaces 140901 / en / **N31792** / 4

# AHLSTAR

## PROCESS PUMPS

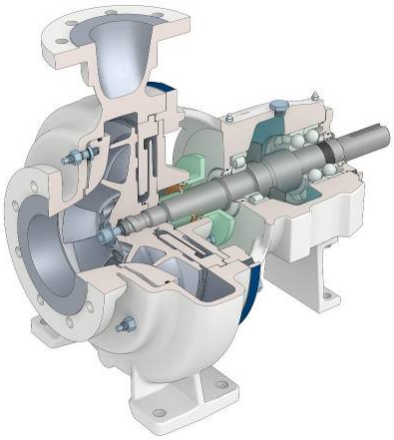

**Intended use**


| | |
|---|---|
| 1 | General |
| 2 | Document identification |
| 3 | Type designation |
| 4 | Parts number designation |
| 5 | Nameplate designation |
| 6 | Capacity and head |
| 7 | Decommissioning |



COPYRIGHT © SULZER PUMPS FINLAND OY

# 1 General

**WARNING**

The pump and its accessories may only be used for the purpose for which they have been supplied.

The intended use is given in the order specification and in the following instructions concerning the main pumping parameters and mechanical durability. If the intended use changes, the user must make sure that the pump can be used in the new application and, if necessary, obtain the manufacturer's permission for the change.

**CAUTION**

The maximum allowable working pressure of the pump is indicated in the product specification (under item pump). Please note this also when using a frequency converter.

**Table 1, Intended use in the process**

| **Application data:** | **Sources:** |
|---|---|
| Pumped liquid and its properties (chemicals, solids, consistency, temperature etc.) | Product specification (under "Process data") |
| Main pumping parameters (capacity, head, speed etc.) | Product specification (under "Process data") and nameplate of the pump |
| Other necessary process data | Product specification (under "Process data") |

**Table 2, Delivery and design**

| **Delivery and design data:** | **Sources:** |
|---|---|
| Product scopes (modules) | Product specification |
| Product size | Product specification and nameplate of the pump |
| Other design alternatives (impeller type and size, materials, lubrication, flange drillings, shaft sealing type etc.) | Product specification |
| Maximum allowable working pressure | Product specification |
| Dimensions (pump, accessories, flanges etc.) | Dimensional drawings |
| Weights and mass moments of inertia (bare pump, pump + baseplate etc.) | Dimensional drawings |
| Connections (lubrication, shaft seal, drainage etc.) | Location shown in the parts list and in the sectional drawings and dimensional drawings. Moreover, connections having importance in view of safety have been marked on the product. |
| Part details (maximum impeller diameter, bearing types, fastener sizes etc.) | Parts list (under heading "Parts") |

This instruction set covers the process pump with the supplementary accessories included in the delivery. All supplied instructions are found in the parts list under the heading "Customer instructions".

Before commissioning, the operating staffs have to be instructed in the guidelines for correct and safe operation of the product as stated in these instructions. This product must be serviced by qualified personnel who are familiar with the design and operation of this product and the system with the essential safety aspects involved. The scope of responsibilities and supervision of the personnel must be exactly defined by the plant operator.


COPYRIGHT © SULZER PUMPS FINLAND OY

Our guarantee will be valid only if the installation, operation, maintenance and repairs of this pump are carried out in accordance with these instructions. The plant operator is to make sure that the contents of these instructions are fully understood by the operating personnel.

To assure a steady start-up, supervision or service from an authorized manufacturer representative is recommended. During operation, periodic inspections should be made to assure safe operation under the prevailing conditions.

Any modification may be made to the product only after consultation with the manufacturer. Using spare parts and accessories authorized by the manufacturer is a relevant safety aspect. Only genuine spare parts which are in accordance with the original delivery (in the parts list) are to be used. Use of other parts may exempt Sulzer from any liability.

If any assistance regarding the product or its instructions is required, please contact our local representative for a quick supply of the information you need.

The enclosed instructions regarding a possible long-term storage (more than 3 months) must be observed.

All customer instructions regarding this product and its main components are also available in an electronic format for viewing and printing (depending on the end user's software & hardware). If electronic format is needed, please contact our local representative for further information.

**If the delivery includes customer instructions or other information in an electronic format which can be edited, we are only responsible for the contents of paper versions of these instructions and other information supplied by us.**

Keep these instructions at the place of operation for further reference!

## 2 Document identification

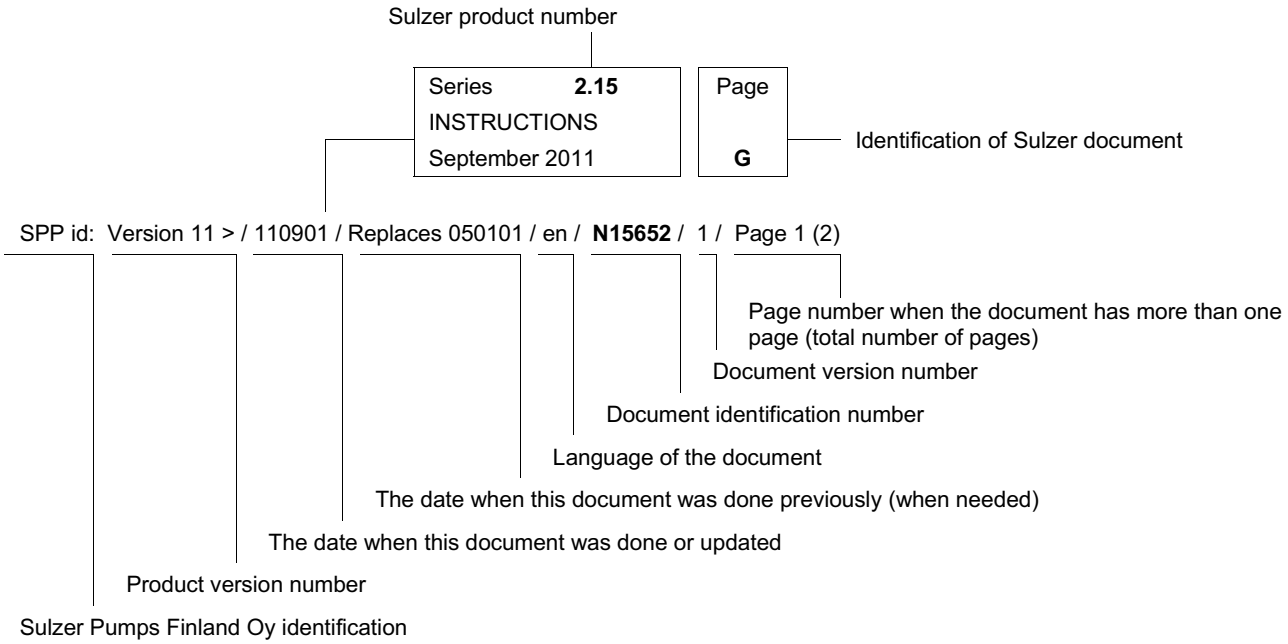



COPYRIGHT © SULZER PUMPS FINLAND OY

# 3 Type designation

**A P T 4 3 - 10 -S**

S = S design liquid ring pump / mechanical seal
R = R design air separating pump / mechanical seal

Nominal diameter of discharge (inch) = 10 in
Except the markings:
A = 0.25 in
B = 0.50 in
C = pressure flange size changed from 5 in to 4 in because 5 in is a non-standard pipe size.
1A = 1.25 in
1B = 1.50 in
2B = 2.50 in

Adapter and sealing unit size = 43

Shaft size = 4

Hydraulic construction
APT = Standard process pump (in-dimensioned structure)
EPT = Hot liquid pump (in-dimensioned structure)
NPT = Non-clogging pump (in-dimensioned structure)
WPT = Wear resistant pump (in-dimensioned structure)

# 4 Parts number designation

## 4.1 Part numbers of modules

The delivery may include the entire pump product (PUPR.0) and/or pump spare parts. The installation-ready pump unit is divided into the following modules: pump (PUMP.0), assembly (ASSE.0), drive unit (DRUN.0), measuring instrumentation (MEIN.0), external degassing system (DESY.0) and documents (DOCU.0).

The pump (PUMP.0) is divided into the following modules: wet end (WEEN.1), sealing unit (SEUN.2) and bearing unit (BEUN.3). The assembly is divided into the following modules: sealing water equipment (SWEQ.4), coupling unit (COUN.5) and baseplate (BAPL.6). The drive unit (DRUN.0) is divided into two parts: motor (DRMO) and frequency converter (FRCO). Documents are divided into two categories: documents supplied with the delivery and documents supplied separately.

## 4.2 Part numbers of parts, connections and documents

Parts, which have part numbers consisting of a three/four-digit number plus two digits after a dot. The first digit after the dot shows the number of the delivery unit or module in question, while the second digit distinguishes parts of the same type from each other.

In the part number, the first digit after the dot is determined by the module. For instance, o-ring 412.11. If the module has many parts with the same name, the second digit after the dot distinguishes the parts from each other. For instance, 412.12 is the second o-ring in the wet end (WEEN.1).

Connections, which have part numbers consisting of the initial letter C, a two-digit number plus two digits after a dot. The first digit after the dot shows the number of the delivery unit or module in question, while the second digit distinguishes connections of the same type from each other.

Documents, which have part numbers consisting of the initial letter D, a two-digit number plus two digits after a dot. The first digit after the dot shows the number of the delivery unit or module in question, while the second digit distinguishes documents of the same type from each other.


COPYRIGHT © SULZER PUMPS FINLAND OY

# 5 Nameplate designation

The following nameplates have been attached to the volute casing (102.11) of each pump:

- Nameplate (971.01), showing the pump's identification data and flow properties. Fig. 1.
- Caution sticker (975.01) of maximum allowable working pressure of the pump. Fig. 2.
- Patent nameplate, showing the patents protecting the product. Fig. 3.

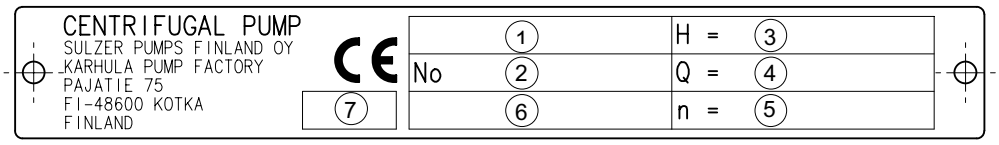


Marking:

1 Pump type
2 Serial No. = Job No.
3 Head (ft)
4 Capacity flow (USGPM)
5 Speed of rotation (rpm)
6 Space for customer Pos. No.
7 Year of manufacture

Fig. 1

Fig. 2

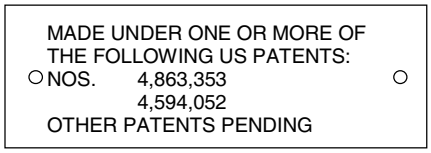


Fig. 3

c = The protection class used is constructional safety
T3 = Temperature class, indicates the maximum surface temperature (392ºF)

Ex = Explosion protection marking
II = Equipment group
2 = Equipment category
G = The equipment is used in explosive atmospheres caused by gases, vapours or mists

CE marking and the mark of the notified body.
0123 = TÜV Product service, München

Fig. 4


COPYRIGHT © SULZER PUMPS FINLAND OY

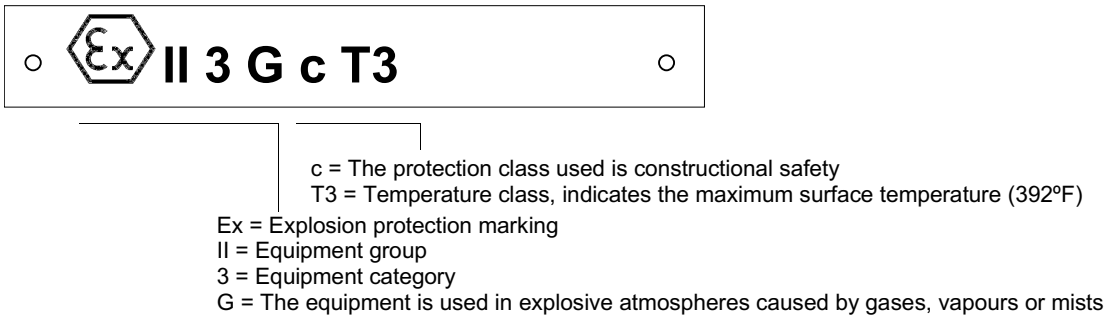


Fig. 5

# 6 Capacity and head

The pump is always dimensioned according to the pumping values (flow, head) stated in the nameplate (971.01) of the pump. Flow and head values that can be reached with the specific impeller diameter and operating speed are given in the characteristic curve of the pump. The operating point on the curve can be changed by adjusting the pumping system resistance e.g. by throttling the flow with the valve in the discharge piping. If the impeller diameter or the rotational speed of the pump is changed, then the operating point will move totally to another head-flow curve.

The pump must not be used at other operating points without the following verifications:

- When the pump was selected in the original operating point, all factors affecting the mechanical durability (e.g pressure and temperature limits) and pump design (pump, impeller type, shaft sealing and lubrication etc.) were carefully considered. All these factors are to be checked also in the new operating point.
- The pump could temporarily operate even with the discharge valve closed. For continuous operation, a minimum flow is still required. The required suction head (NPSH required) curve presented in the characteristic curve always starts from the point of the minimum continuous flow allowed.
- The suction properties of the system (NPSH available) and drive motor power are always to be checked in a new operating point.
- The efficiency of a pump is a relevant factor when estimating the lifetime costs of the pump. Therefore its influence on the power need must be checked.
- The characteristic curve enclosed is always based on tests with clean water. Other types of pumped liquid can change the head, flow or power need values radically. These factors were recognized when the pump was originally selected and they must be considered also in the new operating point.

# 7 Decommissioning

Sulzer Pumps' products are designed so that their service would be as easy as possible by replacing worn or damaged parts with new, original Sulzer spare parts. Parts can also be re-used after reconditioning them at Sulzer Customer Support Service Centers. Sulzer Customer Support Service Centers must be used in the assessment of re-use and reconditioning. If you need additional instructions or guidance, please contact our representative.

The materials used in Sulzer Pumps' products are disclosed in the parts list supplied with the product.

At the end of the life cycle of a product or its parts, the appropriate materials and parts must be recycled or disposed of using methods which are acceptable in terms of environmental protection and which conform to local legislation and regulations. If a product or its part contains environmentally harmful substances, they must be removed and disposed of by following valid regulations.

Packaging materials must be recycled or disposed of using methods which are acceptable in terms of environmental protection and which conform to local legislation and regulations.


COPYRIGHT © SULZER PUMPS FINLAND OY

Make sure that hazardous substances are disposed of safely and that the personnel use appropriate personal protective equipment. Safety considerations must always meet the requirements of valid regulations.


COPYRIGHT © SULZER PUMPS FINLAND OY

SULZER

SPP id: Version 14 > / 170201 / Replaces 140901 / en / **N31793** / 6

# AHLSTAR

## PROCESS PUMPS

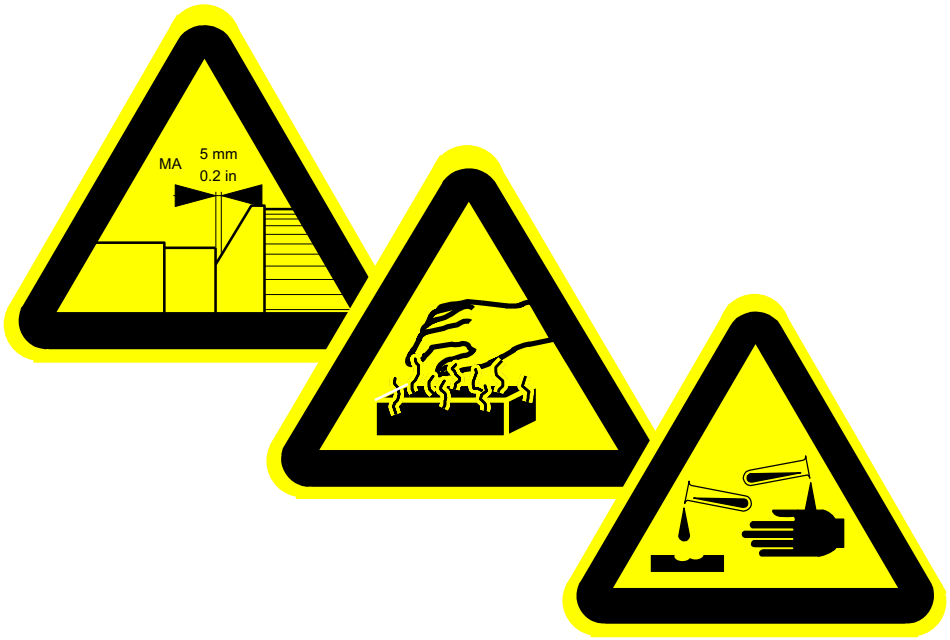


## Safety instructions


1 General
2 Safety of machinery
3 Definitions
4 Essential safety aspects
5 Ignition hazard assessment
6 Safety signs affixed to the product
7 Operating situations affecting product safety
8 Balance and vibration
9 Wet end



COPYRIGHT © SULZER PUMPS FINLAND OY

# 1 General

This product is designed and tested for safe and reliable operation in the application for which it is specified and sold. Remember, a pump is a piece of equipment with pressure containing parts and rotating elements which can cause a hazard. Therefore, all the safety measures in the instructions are to be followed strictly. Personal injuries may result if the instructions are not observed and followed.

It is not only the general safety instructions contained under this main heading ”Safety instructions” which are to be observed, but also the specific safety information presented in other instructions relating to this delivery, relevant national safety regulations or any other safety information issued by the plant operator.

The exact and detailed process and application data is relevant for the safe and reliable operation of the product. Special environmental conditions at the place of installation should always be checked between the end user and manufacturer. Such conditions are e.g.

- Abnormal temperature
- High humidity
- Corrosive atmospheres
- Pressure fluctuations
- Falling below the minimum permissible flow, dry running
- Explosive and/or fire risk zones
- Dust, sandstorms
- Earthquakes

Special safety measures are also needed when the type of liquid to be pumped is e.g. the following:

- Flammable
- Corrosive, abrasive
- Poisonous
- Crystallizing
- Solid containing
- Gas containing

Non-compliance with the safety and specific operating instructions may produce a risk to the personnel as well as to the environment, e.g.

- Failure of important functions of the pump and/or plant
- Failure of specific procedures of maintenance and repair
- Exposure of people to electrical, mechanical and chemical hazards
- Endangering the environment owing to hazardous substances being released


COPYRIGHT © SULZER PUMPS FINLAND OY

# 2 Safety of machinery

## 2.1 General

Our delivery does not include the design of the operating environment of the machine, nor the power circuits, control circuits and controls for the machine required in the operation of the machine. However, the European Machinery Directive 2006/42/EC on the safety of machinery and/or corresponding national legislation in the country where the machine is used as well as directive 94/9/EC for a device intended to be used in potentially explosive atmospheres are mandatory in respect of the essential health and safety requirements related to the operation of the entire process.

We require that the Customer has taken into account the essential requirements laid down in this instruction when designing, purchasing and starting up the process control systems, other controls and equipment related to the machine. Some of these requirements also concern the personnel in charge of the operation of the machine.

As far as the above is applicable, the Customer must also ensure that the valid legislation on electrical safety (such as low-voltage directive) or electromagnetic compatibility of equipment (EMC directive) is followed.

During the operation of the machine, valid occupational safety legislation of the country where the machine is used must also be followed.

## 2.2 Essential health and safety requirements

### 2.2.1 General remarks

#### 2.2.1.1 Definitions

When necessary, the potential danger zones related to the machine and its operating environment, persons exposed within the danger zone and all operator groups of the machine must be specified jointly between the Customer and the Manufacturer, for example for the purpose of introductory training arranged for the operators of the machine.

#### 2.2.1.2 Principles of safety integration

As a machine manufacturer, we have, in accordance with the contents of the delivery, followed the Machinery Directive and/or the national legislation of the country where the machine is used in order to ensure safety integration.

The installation, operating and safety instructions supplied with the machine must be followed on receipt of the machine, in installing it at the point of operation and in its operation. Prior to final start-up, it must be ensured that the machine, its controls and other equipment related to a safe use of the machine fulfill the requirements laid down in the Machinery Directive and/or in national safety legislation.

#### 2.2.1.3 Materials and products

The products related to the use of the machine (liquids transferred in the process) must not endanger the exposed persons' safety or health. The process where the machine is used must be designed so that the use of liquids causes no hazard.

#### 2.2.1.4 Lighting

Maintenance areas necessary for the regular inspections of the machine must be provided with appropriate lighting.


COPYRIGHT © SULZER PUMPS FINLAND OY

2.2.1.5 Design of machinery to facilitate its handling

The environment of the machine must be designed so that, in order to facilitate the handling of the machine or its various components, standard lifting gear can be attached above the machine if necessary. The environment must be designed so that the various components can be handled safely in other respects as well. The handling and lifting instructions supplied with the machine must be absolutely followed.

## 2.2.2 Controls

2.2.2.1 Control and stopping devices

The controls of the machine must be safe and constructed in a way that will prevent a dangerous situation arising.

When designing the controls, the specified requirements laid down in the Machinery Directive and/or in the national legislation of the country where the machine is used must be absolutely followed in terms of controls, starting devices, stopping devices (including emergency stop devices) and selection of control and operating modes for the machine and combinations of machinery.

The controls of the machinery must be designed so that fluctuations in energy supply or failures in the control circuit do not lead to dangerous situations. The interactive software used in the controls between the operator and the machine must be user-friendly.

## 2.2.3 Protection against mechanical hazards

2.2.3.1 Stability

Our delivery includes the appropriate accessories for securing the machine to the foundations. The installation instructions supplied with the machine must be absolutely followed in order to ensure sufficient stability of the machine/combination of machinery.

2.2.3.2 Risk of break-up during operation

The piping and hoses connected to the machine must be able to withstand the anticipated internal and external stresses, and they must be firmly secured and protected against all loading and stress.

The instructions concerning the purpose of the machine, limitations of use, allowable flange forces and support of piping, supplied with the machine, must be absolutely followed. During operation, there is always a risk of rupture in the piping connected to the machine (risk of high-pressure/hot/harmful liquid spray) if the supplied instructions are violated.

2.2.3.3 Risk due to falling or ejected objects

Necessary precautions must be taken to prevent risks from falling or ejected objects (e.g. tools used during installation).

2.2.3.4 Risks due to sharp edges or angles

Due to the purpose and design of the machine, its parts have sharp edges and/or angles. During installation and maintenance, the instructions supplied with the machine must be followed, and the appropriate personal protective equipment must be used.

2.2.3.5 Risks related to variations in the rotational speed

The instructions supplied with the machine show the intended rotational speed of the machine and its maximum rotational speed limits. The selection and adjustment of rotational speed must be performed so that these instructions are adhered to.


COPYRIGHT © SULZER PUMPS FINLAND OY

2.2.3.6 Prevention of risks related to moving parts

The fixed guards used for preventing risks related to moving parts in the machine must be absolutely kept in place while the machine is running. If a guard is not included in the delivery, it must be ensured prior to start-up that the rotating parts are provided with guards in accordance with the valid legislation. If rotating parts of the machine seize accidentally during operation, the machine must be stopped immediately and the cause of the fault must be ascertained in accordance with the instructions supplied with the machine.

## 2.2.4 Protection against other hazards

2.2.4.1 Electricity supply

The electrical drives of the machine must be designed, constructed and equipped so that all hazards of an electrical nature can be prevented. The specific rules and valid legislation in force related to electrical equipment must be absolutely followed. The electrical equipment related to a machine conforming to the Machinery Directive must fulfill the detailed requirements laid down in standard EN 60204-1:2006.

2.2.4.2 Static electricity

The build-up of potentially dangerous electrostatic charges in the machine and its auxiliary equipment must be prevented or restricted.

2.2.4.3 Errors of fitting

Errors made when fitting parts of the machine can be a source of risk. For this reason, the instructions supplied with the machine must be absolutely followed during the installation and repairs of the machine.

Faulty liquid and electrical connections can also be a source of risk. With liquid connections, the instructions supplied with the machine must be followed. Faulty electrical connections must be made impossible by the design, or information on the risk must be given on cables and connectors.

2.2.4.4 Extreme temperatures

If necessary, the machine must be provided with warnings concerning high surface temperatures. In these cases, additional steps should be taken to eliminate any risk of injury caused by contact with or proximity to machinery parts. Maintenance requires the heating of some parts prior to installation. Carefulness is imperative during installation, and appropriate personal protective equipment must be used during installation.

2.2.4.5 Fire and explosion

Exact and detailed information on the process and the purpose for which the machine is used are essential in terms of safe operation of the machine. The specific circumstances prevailing at the point of use must always be checked between the Customer and Manufacturer when the machine is being selected.

With equipment intended for use in potentially explosive atmospheres (ATEX), see section 5 (Ignition hazard assessment.

2.2.4.6 Noise and vibration

The instructions supplied with the machine provide information on the emission of airborne noise and on the balancing of rotating parts of the machine. The data given must be taken into account and necessary steps must be taken in order to eliminate any risks caused by noise or vibration in accordance with the circumstances prevailing at the point of use.


COPYRIGHT © SULZER PUMPS FINLAND OY

#### 2.2.4.7 Radiation

The instructions supplied with the machine provide information on the emission of radiation potentially involved in the measuring equipment of the machine. The operators of the machine must absolutely follow the safety instructions concerning the use of this equipment.

#### 2.2.4.8 Emissions

The instructions supplied with the machine provide information on the control of leakages in the immediate proximity of the machine. If necessary, the following steps must be taken to eliminate harmful emissions involved in the process:

- account of the emissions and their potential consequences (e.g. possibility of fire, appropriate extinguishing equipment)
- preventing exposure of operators
- controlled containment and evacuation of emissions
- cleaning of emissions and machinery
- appropriate personal protective equipment and warnings

#### 2.2.4.9 Slipping, stumbling and falling

When installing, servicing and repairing the machine, the instructions supplied with the machine, safety instructions applicable at the point of use and sufficient care and attention must be followed in order to prevent any slipping, stumbling or falling.

### 2.2.5 Maintenance

#### 2.2.5.1 Machinery maintenance

The maintenance and repair instructions supplied with the machine must be absolutely followed. The instructions specify separately which measures require stopping and potential draining of the machine. Appropriate personal protective equipment as required by the work performed must always be used, e.g.:

- hearing protectors
- eye protectors
- breathing protectors
- safety gloves, safety footwear, protective clothing

When servicing and repairing the machine, principles of ergonomics (avoiding excessive use of muscular power, utilization of lifting gear, lifting positions, lighting of the area, cleanliness etc.) must also be taken into account.

#### 2.2.5.2 Access to operating position and servicing points

Where the location design for the machine is not included in the delivery, steps must be taken to situate the machine at the point of operation in a manner that enables safe maintenance and repairs of the machine. Provision of sufficient maintenance space around the machine must be taken into account in the design of the operating environment.

#### 2.2.5.3 Isolation of energy sources

The controls of the machine must be designed so that they include clearly identified devices that can be used to isolate the machine from all energy sources. These devices must be capable of being locked if reconnection of energy could endanger exposed persons. After the energy is cut off, it must be possible to dissipate any energy remaining or stored in the process (e.g. discharging pressure) without risk to exposed persons.


COPYRIGHT © SULZER PUMPS FINLAND OY

#### 2.2.5.4 Operator intervention

The controls of the machine must be designed so that the need for operator intervention is limited.

#### 2.2.5.5 Cleaning of (internal) parts of machine

The potential cleaning of the machine must take place in accordance with the instructions supplied with the machine and the safety instructions applicable at the point of use so that cleaning can be carried out as safely as possible.

### 2.2.6 Indicators

#### 2.2.6.1 Information and warning devices

When designing the controls of the machine, the specified requirements laid down in the Machinery Directive and/or national legislation of the country where the machine is used must be absolutely followed in terms of information and warning devices used on the machine.

#### 2.2.6.2 Warning of residual risks

The safety warnings related to the machine must be kept clean under all circumstances, and the warnings must be renewed when necessary. All operators of the machine must be warned of the residual risks involved in electricity or the controls in accordance with specified requirements laid down in the Machinery Directive and/or national legislation of the country where the machine is used.

#### 2.2.6.3 Marking and instructions

The marking and instructions for the machine must be drawn up in accordance with the Machinery Directive and/or national legislation of the country where the machine is used. Steps must be taken to ensure that the marking and instructions for other equipment related to a safe use of this machine conform to valid legislation.

In particular, it must be ensured that the point of use is provided with instructions for emergencies, such as:

- how to give alarm
- location of rescue and fire extinguishing equipment
- availability of first aid and necessary first aid equipment

## 3 Definitions

The following words are used in the instructions to indicate issues which require special attention.

| **W A R N I N G** |
|---|
| There is a risk of personal injury if the instruction is not adhered to. |

| **C A U T I O N** |
|---|
| There is a risk of damaging or destroying the product or equipment if the instruction is not adhered to. |

| **N O T E** |
|---|
| Is used in the text for highlighting necessary information or requirements which are essential to observe. |


COPYRIGHT © SULZER PUMPS FINLAND OY

# 4 Essential safety aspects

All of the following relevant safety aspects are to be instructed to the operators and maintenance personnel before putting the product into service.

## General

- The product is meant only for the purpose for which it is sold - never operate beyond the intended use described in these instructions.
- Personal injuries may occur if personal protective equipment is not used when servicing the product.
- Pump units which convey hazardous media must be decontaminated before beginning any maintenance work.
- If there is a possibility that the pump or the pipeline contains explosive gases or vapours, it must be ventilated carefully before working on the pump.
- If there is a possibility that there are explosive gases or vapours in the atmosphere surrounding the pump, the pump's environment must be ventilated carefully before working on the pump.
- External heat must not be used when dismantling the pump, as any liquid, gas, vapour or their combination that remains in the pump may explode.
- All safety devices (e.g. coupling and shaft sealing guards) must be correctly installed before starting. For explosive areas, guards with a non-sparking material are to be used.
- Tools used in an explosive air mixture must comply with the requirements of the relevant standard. Refer to e.g EN 1127-1:2011 Annex A.
- In a potentially explosive environment, the pump must be lifted and transferred so that no sparking can occur.

## Wet end

- If there is a possibility of a dangerous return flow after the shutdown of the pump, a nonreturn device shall be installed in the outlet piping.
- The pump must be sufficiently filled with the pumped liquid before starting (with the exception of liquid ring pumps (-S) and air separating pumps (-R)).
- The pump must run above the minimum recommended flow and never dry (with the exception of liquid ring pumps (-S) and air separating pumps (-R)).
- The suction valve must be open during operation.
- If leakage of harmful or dangerous substances can occur - prepare proper means for a safe waste removal.
- The parts in contact with the pumped liquid can be dangerously hot.

## Sealing unit

- The product must always be equipped with a shaft sealing system compatible with the pumped liquid.
- The parts in contact with the pumped liquid can be dangerously hot.

## Bearing unit

- For delivery, the bearing housing of the pump has been emptied of oil. Remember to refill it before starting.
- There is no protection against contact in the shaft seal area.


COPYRIGHT © SULZER PUMPS FINLAND OY

### Drive motor

- Always stop the drive unit before beginning any repair work on the pump. Make sure that the motor cannot be started by any means accidentally during the repairs.
- The correct rotating direction of the drive unit must be checked before starting and the pump must rotate freely (with coupling spacer removed).

### Coupling unit

- The coupling must be properly aligned before starting.

### Baseplate

- The pump baseplate must be properly installed before starting.
- Make sure that the baseplate of the pump is properly grounded.

# 5 Ignition hazard assessment

## 5.1 General

1 Description of use

**Group II category 2 Ex II 2 G c T1, T2, T3 and T4:** The equipment is a centrifugal pump designed for use in environments in which the release of flammable materials will give rise to a zone 1 potentially explosive atmosphere (zone in which explosive atmospheres caused by mixtures of air and gases, vapours or mists are likely to occur occasionally during normal operation). The pump is designed for pumping various liquids in the process industry.

**Group II category 3 Ex II 3 G c T1, T2, T3 and T4:** The equipment is a centrifugal pump designed for use in environments in which the release of flammable materials will give rise to a zone 2 potentially explosive atmosphere (a place in which an explosive atmosphere consisting of a mixture with air of flammable substances in the form of gas, vapor or mist is not likely to occur in normal operation but, if it does occur, will persist for a short period only). The pump is designed for pumping various liquids in the process industry.

2 Construction

The pump is horizontally mounted and has a single-stage end-suction design. The pump shaft is mounted on antifriction bearings so that the bearing at the impeller end carries radial loads, while the bearings at the clutch end carry mainly axial loads. The pump is made from cast iron (for non-corroding liquids) or acid-resistant steel (for corroding liquids). The pump easily passes the required mechanical tests described in EN 13463-1. There are no light metal or plastic parts that need consideration, or other relevant restrictions as described in EN 13463-1.

The pump's design is such that it will not leak even in the event of a foreseeable malfunction. In normal operation, the pump contains the liquid being pumped. In a self-priming design, the pump is filled with air or a mixture of air and, for example, vapours or mists when the pump starts and before it is filled with the liquid that is to be pumped. This is a planned function and does not compromise the functioning of the pump. The pump is sealed either by a single-acting or double-acting slide ring seal, depending on the operating conditions. If a slide ring seal is used, the sliding faces are lubricated by either the liquid that is being pumped or an external sealing liquid.

The pump mounting has been designed to withstand the expected loads and vibration caused by the pump. The installation, operation and maintenance instructions include details of the support required by the pipes.

3 Ignition hazard assessment


COPYRIGHT © SULZER PUMPS FINLAND OY

The ignition hazard assessment according to 5.2 of EN 13463-1 + AC identifies that, because of its construction and on the basis of testing (temperature classification and shock resistance tests), no ignition sources exist in normal operation, during scheduled maintenance or repairs.

The table below lists all potential ignition sources that can be detected on the basis of experience, assesses the measures applied to prevent the source becoming effective and specifies the ignition protection methods used. This ignition hazard assessment document is placed in the manufacturer's technical file.

4 Marking with regard to ignition protection

EN 13463-1 requires the equipment to be marked with the symbol(s) of the ignition protection used. In this particular case, the pump complies with EN 13463-1 and EN 13463-5 and the symbol 'c' will therefore be included in the marking.

## 5.2 Group II category 2 (Ex II 2 G c T1, T2, T3 and T4)

| **Potential ignition source (1)** | | | **Measures applied to prevent the source becoming effective (2)** | **Ignition protection used** |
|---|---|---|---|---|
| **Normal operation (1a)** | **Expected malfunction (1b)** | **Rare malfunction (1c)** | | |
| **Assembly** | | | | |
| Electrostatic discharge from the pump's external surfaces and subsequent arcing | | | Electrostatic charging is not possible, as the pump has no exposed plastic parts. Metal parts are attached to each other so that there are no differences in potential.<br><br>There is no ignition source. | EN 13463-1 + AC 7.4<br><br>EN 13463-1 + AC 11.<br><br>EN 13463-5 'c' |
| | The pump is driven at excess speed and is therefore damaged. | | The design rotation speed for the pump is indicated on a label attached to the pump body. | EN 13463-5 'c' |
| Accumulation of an explosive mixture of gases or air in the pump | | | All air or gas mixtures are discharged from the pump when liquid enters.<br>The pump is so designed that gases or air cannot accumulate outside the pump.<br><br>There is no ignition source. | EN 13463-1 + AC 15.<br><br>EN 13463-5 'c'<br><br>IOM |
| The clutch cover makes contact with the clutch and causes frictional arcing or heat | | | The clutch cover is designed so that there is sufficient clearance to prevent contact between the rotating clutch and the clutch cover.<br><br>There is no ignition source. | EN 13463-5 'c' |
| | The clutch cover is deformed because of a shock so that the clutch makes contact with the clutch cover, which causes frictional heat or arcing. | | The strength of the clutch cover has been checked by shock resistance tests.<br><br>There is no ignition source. | EN 13463-1 + AC 13.3.2 |
| Clutch | The clutch is aligned or installed incorrectly, which leads to clutch breakage and arcing. | Clutch breakage because of a rare malfunction, such as jamming, a material defect in the clutch or excessive pipe strain on the pump.<br><br>Not considered. | The installation, operation and maintenance manual contains instructions on the installation and alignment of the clutch.<br><br>There is no ignition source. | EN 13463-5 'c' 8<br><br>IOM |


COPYRIGHT © SULZER PUMPS FINLAND OY

| Potential ignition source (1) | | | Measures applied to prevent the source becoming effective (2) | Ignition protection used |
|---|---|---|---|---|
| **Normal operation (1a)** | **Expected malfunction (1b)** | **Rare malfunction (1c)** | | |
| **Bearings** | | | | |
| Overheating of bearings | A bearing breaks and overheats | | The bearings are dimensioned for continuous operation at rated values. The installation, operation and maintenance manual contains instructions on the maintenance and condition monitoring of bearings. The pump has vibration measurement fittings through which the condition of the bearings can be monitored.<br><br>There is no ignition source. | EN 13463-5 'c' 6<br><br>IOM |
| | Insufficient lubrication of bearings, which leads to their overheating | | Oil-lubricated bearings have a sight glass for monitoring the oil level.<br>The installation, operation and maintenance manual contains instructions on the lubrication of bearings.<br><br>There is no ignition source. | EN 13463-5 'c' 6<br><br>IOM |
| | Overheating of grease-lubricated bearings because of excessive grease | | The installation, operation and maintenance manual contains instructions on correct lubrication to prevent the overheating of bearings.<br><br>There is no ignition source. | EN 13463-5 'c' 6<br><br>IOM |
| | | Ingress of water or other impurities into the bearings, which leads to insufficient lubrication, bearing failure and the overheating of bearings | The installation, operation and maintenance manual contains instructions on the maintenance and condition monitoring of bearings. Failure caused by the ingress of water is shown as increased vibration of the bearings, which can be detected during condition monitoring. The pump has vibration measurement fittings through which the condition of the bearings can be monitored.<br><br>There is no ignition source. | EN 13463-5 'c' 6<br><br>IOM |
| | | The metal part of the bearing's rotating ring rubs against the labyrinth static seal and arcs or overheats; a shock on a metal part deforms the rotating ring. | The rotating ring is protected with the shock-resistant clutch cover at the drive end. The rotating ring at the impeller end is located inside a socket, which is extremely unlikely to be subjected to shocks.<br><br>Does not apply to categories 2 and 3.<br><br>There is no ignition source. | EN 13463-5 'c' |
| **Rotary shaft seals** | | | | |
| | Failure of the sealing face of a mechanical seal lubricated with the liquid being pumped due to insufficient lubrication, which leads to seal overheating. | | Rotary shaft seals must always be selected on a case-by-case basis, depending on the liquid to be pumped and process conditions. The installation, operation and maintenance manual contains instructions on the condition monitoring of seals.<br><br>There is no ignition source. | EN 13463-1 + AC 15.<br><br>EN 13463-5 'c'<br><br>IOM |


COPYRIGHT © SULZER PUMPS FINLAND OY

| Potential ignition source (1) | | | Measures applied to prevent the source becoming effective (2) | Ignition protection used |
|---|---|---|---|---|
| **Normal operation (1a)** | **Expected malfunction (1b)** | **Rare malfunction (1c)** | | |
| | Failure of the sealing face of a mechanical seal lubricated with external sealing liquid due to insufficient lubrication, which leads to seal overheating. | | Rotary shaft seals must always be selected on a case-by-case basis, depending on the liquid to be pumped and process conditions. The installation, operation and maintenance manual contains instructions on the condition monitoring of seals.<br><br>There is no ignition source. | EN 13463-1 + AC 15.<br><br>EN 13463-5 'c'<br><br>IOM |
| **Load-bearing parts** | | | | |
| | | The impeller makes contact with the side plate, sealing ring or the casing cover, which leads to the overheating of the pump's external surface. | Does not apply to categories 2 and 3.<br><br>There is no ignition source. | EN 13463-5 'c' 5.3 |
| | | A solid object blocks the gap between the impeller and the side plate or the casing cover, which leads to the overheating of the pump's external surface. | Does not apply to categories 2 and 3.<br><br>There is no ignition source. | EN 13463-1 + AC 15.<br><br>IOM |
| | The pump runs against a closed valve for a long time, which leads to pump breakage and overheating. | | The installation, operation and maintenance manual contains instruction on the control and monitoring of operation. Long-term running against a closed valve is prohibited.<br><br>There is no ignition source. | EN 13463-1 + AC 15.<br><br>IOM |
| **Components** | | | | |
| Clutch | | | The clutch delivered meets the requirements of the ATEX Directive.<br><br>There is no ignition source. | EN 13463-1 + AC |
| Electric motor | | | The motor delivered meets the requirements of the ATEX Directive.<br><br>There is no ignition source. | Ex requirements |
| Sealing liquid equipment | | | The sealing liquid equipment delivered meets the requirements of the ATEX Directive.<br><br>There is no ignition source. | EN 13463-1 + AC |
| **Repairs** | | | | |
| | The pump is repaired in the presence of an explosive mixture. | | The installation, operation and maintenance manual contains instructions on the ventilation of the premises in which repairs are carried out.<br><br>There is no ignition source. | EN 13463-1 + AC 15.<br><br>IOM |


COPYRIGHT © SULZER PUMPS FINLAND OY

| Potential ignition source (1) | | | Measures applied to prevent the source becoming effective (2) | Ignition protection used |
|---|---|---|---|---|
| **Normal operation (1a)** | **Expected malfunction (1b)** | **Rare malfunction (1c)** | | |
| | An explosive mixture remains in the pipeline. | | The installation, operation and maintenance manual contains instructions on the ventilation of the pipeline that is connected to the pump.<br><br>There is no ignition source. | EN 13463-1 + AC 15.<br><br>IOM |

IOM = **I**nstallation, **O**peration and **M**aintenance manual

## 5.3 Group II category 3 (Ex II 3 G c T1, T2, T3 and T4)

| Potential ignition source (1) | | | Measures applied to prevent the source becoming effective (2) | Ignition protection used |
|---|---|---|---|---|
| **Normal operation (1a)** | **Expected malfunction (1b)** | **Rare malfunction (1c)** | | |
| **Assembly** | | | | |
| Electrostatic discharge from the pump's external surfaces and subsequent arcing | | | Electrostatic charging is not possible, as the pump has no exposed plastic parts. Metal parts are attached to each other so that there are no differences in potential.<br><br>There is no ignition source. | EN 13463-1 + AC 7.4<br><br>EN 13463-1 + AC 11.<br><br>EN 13463-5 'c' |
| Accumulation of an explosive mixture of gases or air in the pump | | | All air or gas mixtures are discharged from the pump when liquid enters.<br>The pump is so designed that gases or air cannot accumulate outside the pump.<br><br>There is no ignition source. | EN 13463-1 + AC 15.<br><br>EN 13463-5 'c'<br><br>IOM |
| The clutch cover makes contact with the clutch and causes frictional arcing or heat | | | The clutch cover is designed so that there is sufficient clearance to prevent contact between the rotating clutch and the clutch cover.<br><br>There is no ignition source. | EN 13463-5 'c' |
| **Bearings** | | | | |
| Overheating of bearings | A bearing breaks and overheats | | The bearings are dimensioned for continuous operation at rated values. The installation, operation and maintenance manual contains instructions on the maintenance and condition monitoring of bearings. The pump has vibration measurement fittings through which the condition of the bearings can be monitored.<br><br>There is no ignition source. | EN 13463-5 'c' 6<br><br>IOM |
| **Load-bearing parts** | | | | |
| **Components** | | | | |
| Clutch | | | The clutch delivered meets the requirements of the ATEX Directive.<br><br>There is no ignition source. | EN 13463-1 + AC |
| Electric motor | | | The motor delivered meets the requirements of the ATEX Directive.<br><br>There is no ignition source. | Ex requirements |


COPYRIGHT © SULZER PUMPS FINLAND OY

| Potential ignition source (1) | | | Measures applied to prevent the source becoming effective (2) | Ignition protection used |
|---|---|---|---|---|
| **Normal operation (1a)** | **Expected malfunction (1b)** | **Rare malfunction (1c)** | | |
| Sealing liquid equipment | | | The sealing liquid equipment delivered meets the requirements of the ATEX Directive.<br><br>There is no ignition source. | EN 13463-1 + AC |

IOM = **I**nstallation, **O**peration and **M**aintenance manual

# 6 Safety signs affixed to the product

The following warnings and informative signs concerning the essential safety aspects are permanently fixed on the product. Safety signs must always be observed and kept clean and legible in any operating condition. The user must always check that the symbols or items presented in those are understood by all user groups before putting the product into service.

## Wet end

Item no. 975.11. Hot surface, do not touch (to be fixed when the temperature of the pumped liquid is > 140°F)

## Sealing unit

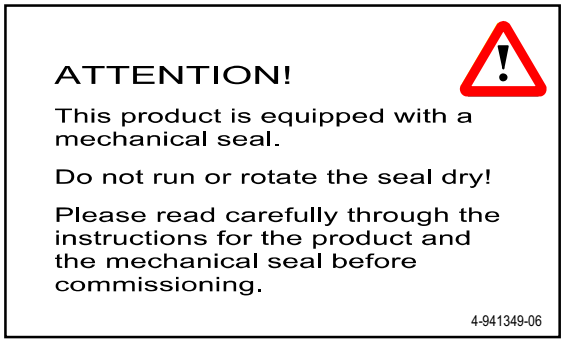


Item no. 976.21. Do not run or rotate the seal dry


COPYRIGHT © SULZER PUMPS FINLAND OY

Bearing unit

Item no. 975.31. Splashing of corrosive or irritative substances (this sign is delivered unattached and it is to be attached to both sides of the adapter if necessary)

Coupling unit

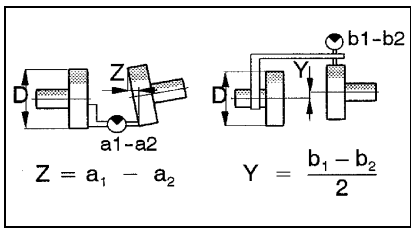


Item no. 976.51. Coupling alignment values

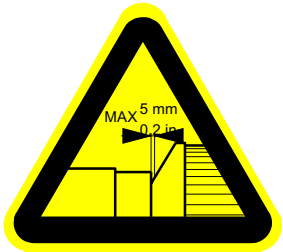


Item no. 975.51. Coupling guard jacket to be adjusted during assembly

# 7 Operating situations affecting product safety

The following inadequate operating situations always have consequences which have an immediate effect on the product safety and therefore they are not allowed in any operating conditions with this product.

**Table 1, Typical inadmissible operating situations**

| Cause: | Consequence: |
|---|---|
| Discharge valve not opened.<br>Inlet pressure or piping system resistance incorrectly estimated when the pump was originally selected.<br>The pump is operated at too high a rotational speed. | Inadmissible pressure increase |
| Discharge valve not opened.<br>Discharge valve throttled too much.<br>Properties of the pumped liquid incorrectly estimated when the pump was originally selected. | High temperatures (Wet end) |


COPYRIGHT © SULZER PUMPS FINLAND OY

| **Cause:** | **Consequence:** |
|---|---|
| Gland packing tightened too much.<br>Adequate sealing water service neglected.<br>- Sealing water pump not started<br>- Sealing water valve not opened<br>- Sealing water equipment incorrectly adjusted<br>- Quality of the sealing water does not match our requirements.<br>Inlet pressure incorrectly estimated when the pump was originally selected.<br>Pump is not properly filled with the pumped liquid.<br>- Suction valve not opened<br>- Suction tank not properly filled<br>- Suction piping resistance or air tightness improperly checked | High temperatures (Sealing unit) |
| Pump lubrication carried out inadequately.<br>- Oil/grease filling neglected<br>- Oil/grease quality incorrectly selected<br>- Relubrication carried out inadequately<br>Pump washdown carried out inadequately (sprayed water enters the bearing unit).<br>Properties of the pumped liquid incorrectly estimated when the pump was originally selected. | High temperatures (Bearing unit) |

# 8 Balance and vibration

The pump is normally balanced in accordance with grade G 6.3 of ISO 1940, in special cases with grade G 2.5 of ISO 1940. Vibration does not exceed the vibration severity limits given in Table 2 when measured at the manufacturer's test facilities. These values are measured radially at the bearing housing at rated speed and flow when operating without cavitation.

A pump equipped with a specially designed impeller may exceed the limits given in Table 2.

**Table 2, Max. r.m.s values of vibration velocity**

| **Pump installation** | Shaft centerline height H1 | |
|---|---|---|
| | ≤ **8.86 in** | > **8.86 in** |
| Pump on a grouted baseplate or on a concrete baseplate | 0,12 in/s | 0.18 in/s |
| Pump on a baseplate without grouting | 0.18 in/s | 0,28 in/s |

# 9 Wet end

## 9.1 Admissible forces and moments on pump flanges

Forces and moments acting on the pump flanges due to pipe loads can cause misalignment of the pump and driver shafts, deformation and overstressing of the pump casing, or overstressing of the fixing bolts between the pump and baseplate.

This is a simple method for checking that loads transmitted to a pump by its piping remain within acceptable limits. This is done by comparing the loads (forces and moments) calculated by the piping designer, with the maximum values allowed on the flanges, as a function of their size and the installation conditions.

The basic values given in Table 3 are applicable to each of the pump flanges, respecting the sign convention of the three axes through the flange. The values can be applied simultaneously in all directions with positive or negative signs, or separately on each flange (suction and discharge).


COPYRIGHT © SULZER PUMPS FINLAND OY

**WARNING**

The basic values mentioned in Table 3 should be multiplied by: 0.15 white iron, 0.35 cast iron, 0.45 carbon steel and 0.7 stainless steel. The values mentioned in the table apply to pumps equipped with a grouted baseplate or a concrete baseplate. A baseplate installed with machine feet should be multiplied by 0.25.

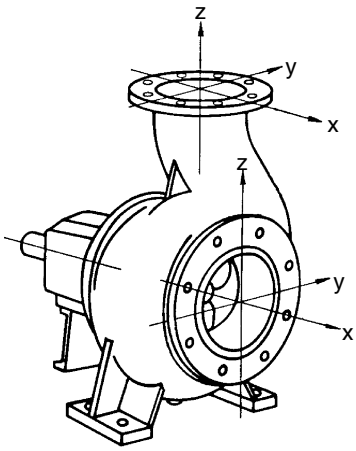


Fig. 1

**Table 3, Basic values of forces and moments**

| Pump size | Top branch z-axis | | | | | | | |
|---|---|---|---|---|---|---|---|---|
| | Force (lbf) | | | | Moment (lb ft) | | | |
| | $F_y$ | $F_z$ | $F_x$ | ΣF* | $M_y$ | $M_z$ | $M_x$ | ΣM * |
| ??-1A | 190 | 235 | 200 | 370 | 555 | 625 | 810 | 1180 |
| ??-1B | 225 | 280 | 245 | 440 | 665 | 775 | 960 | 1400 |
| ??-2 | 305 | 370 | 335 | 585 | 735 | 850 | 1030 | 1510 |
| ??-2B | 380 | 470 | 415 | 740 | 810 | 885 | 1105 | 1620 |
| ??-3 | 460 | 560 | 505 | 890 | 850 | 960 | 1180 | 1735 |
| ??-4 | 610 | 755 | 675 | 1180 | 920 | 1070 | 1290 | 1915 |
| ??-4C | 720 | 890 | 800 | 1395 | 1105 | 1400 | 1550 | 2250 |
| ??-6 | 910 | 1125 | 1010 | 1765 | 1290 | 1510 | 1840 | 2690 |
| ??-8 | 1215 | 1505 | 1350 | 2350 | 1695 | 1955 | 2395 | 3540 |
| ??-10 | 1520 | 1875 | 1675 | 2935 | 2325 | 2690 | 3280 | 4830 |
| ??-12 | 1810 | 2250 | 2010 | 3520 | 3170 | 3650 | 4460 | 6565 |
| ??-14 | 2115 | 2620 | 2350 | 4105 | 4050 | 4685 | 5715 | 8405 |
| ??-16 | 2415 | 2990 | 2685 | 4690 | 5090 | 5865 | 7155 | 10545 |
| ??-20 | 3025 | 3730 | 3360 | 5855 | 7560 | 8700 | 10655 | 15710 |
| ??-24 | 3630 | 4475 | 4035 | 7025 | 10620 | 12240 | 14895 | 22050 |

| Pump size | End branch x-axis | | | | | | | |
|---|---|---|---|---|---|---|---|---|
| | Force (lbf) | | | | Moment (lb ft) | | | |
| | $F_y$ | $F_z$ | $F_x$ | ΣF* | $M_y$ | $M_z$ | $M_x$ | ΣM * |
| ??-1A | 200 | 190 | 235 | 370 | 555 | 625 | 810 | 1180 |
| ??-1B | 245 | 225 | 280 | 440 | 665 | 775 | 960 | 1400 |
| ??-2 | 335 | 305 | 370 | 585 | 735 | 850 | 1030 | 1510 |
| ??-2B | 415 | 380 | 470 | 740 | 810 | 885 | 1105 | 1620 |


COPYRIGHT © SULZER PUMPS FINLAND OY

| Pump size | End branch x-axis | | | | | | | |
|---|---|---|---|---|---|---|---|---|
| | Force (lbf) | | | | Moment (lb ft) | | | |
| | $F_y$ | $F_z$ | $F_x$ | $\Sigma F$* | $M_y$ | $M_z$ | $M_x$ | $\Sigma M$ * |
| ??-3 | 505 | 460 | 560 | 890 | 850 | 960 | 1180 | 1735 |
| ??-4 | 675 | 605 | 755 | 1180 | 920 | 1070 | 1290 | 1915 |
| ??-4C | 800 | 720 | 890 | 1395 | 1105 | 1400 | 1550 | 2250 |
| ??-6 | 1010 | 910 | 1125 | 1765 | 1290 | 1510 | 1840 | 2690 |
| ??-8 | 1350 | 1215 | 1505 | 2350 | 1695 | 1955 | 2395 | 3540 |
| ??-10 | 1675 | 1520 | 1875 | 2935 | 2325 | 2690 | 3280 | 4830 |
| ??-12 | 2010 | 1810 | 2250 | 3520 | 3170 | 3650 | 4460 | 6565 |
| ??-14 | 2350 | 2115 | 2620 | 4105 | 4050 | 4685 | 5715 | 8405 |
| ??-16 | 2685 | 2415 | 2990 | 4690 | 5090 | 5865 | 7155 | 10545 |
| ??-20 | 3360 | 3025 | 3730 | 5855 | 7560 | 8700 | 10655 | 15710 |
| ??-24 | 4035 | 3630 | 4475 | 7025 | 10620 | 12240 | 14895 | 22050 |
| * ΣF and ΣM are the vector sums of the forces and moments. | | | | | | | | |

When all of the applied loads do not attain the maximum values allowed, one of these loads may exceed the normal limit, provided that the following supplementary conditions are satisfied:

- any component of a force or of a moment shall be limited to 1.4 times the maximum allowed value;
- the actual forces and moments acting on each flange are governed by the following formula:

$$\left(\frac{\Sigma|F|_{actual}}{\Sigma|F|_{max.allow.}}\right)^2 + \left(\frac{\Sigma|M|_{actual}}{\Sigma|M|_{max.allow.}}\right)^2 \leq 2$$

Under the maximum allowance forces and moments, the lateral displacement of the shaft end, relative to the fixed point in space should not exceed the values indicated in Table 4.

**Table 4, Lateral displacement**

| Shaft-end diameter (in) | Displacement (in) * |
|---|---|
| < 1.181 | 0.006 |
| 1.220 to 1.575 | 0.008 |
| > 1.575 | 0.010 |
| * The displacement values given are for reference in checking the stiffness of the pump and its supports and are not the same as the alignment requirements. | |

## 9.2 Sound level charts

Noise emission values are stated according to ISO 4871 and the essential requirements in the Machinery Directive 2006/42/EC.

The noise values are given in accordance with standard EN12639.

Sound power levels have been determined according to EN ISO 9614 Part II using sound intensity measurements.

It is not possible to measure all different pump applications. Therefore, some values have been determined by calculations based on measurements with similar pumps and Europump's Guide 001/30/E, Forecasting the Airborne Noise Emission of Centrifugal Pumps.

**LpA** = A-weighted sound pressure level, dB re 20 μPa, at the relevant working station.

**LwA** = A-weighted sound power level, dB re 1 pW, if A-weighted sound pressure level exceeds 85 dB.


COPYRIGHT © SULZER PUMPS FINLAND OY

## Closed impellers

**Table 5, Sound pressure level LpA / closed impellers (dB)**

| Pump size | Pump types | Pump rot. speed (rpm) | | | | | |
|---|---|---|---|---|---|---|---|
| | | 3550 | 1760 | 1180 | 880 | 710 | 590 |
| 11-1A | APT | <70 | <70 | <70 | | | |
| 11-1B | APT | <70 | <70 | <70 | | | |
| 11-2 | APP | 72 | <70 | <70 | | | |
| 21-3 | N_T | | <70 | <70 | <70 | | |
| 21-2B | APT | 75 | <70 | <70 | | | |
| 21-3 | APT | 77 | <70 | <70 | | | |
| 21-3 | NPT | | <70 | <70 | <70 | | |
| 22-1B | APT | 75 | <70 | <70 | <70 | | |
| 22-2 | APT, WPT | 76 | <70 | <70 | <70 | | |
| 22-2 | NPT | | <70 | <70 | <70 | | |
| 22-2B | APT | 79 | <70 | <70 | <70 | | |
| 22-3 | APT | 81 | <70 | <70 | <70 | | |
| 22-3 | NPT | | <70 | <70 | <70 | | |
| 23-2 | APT, WPT | | <70 | <70 | <70 | | |
| 31-2B | EPT | 81 | <70 | <70 | | | |
| 31-4 | APT | 83 | 71 | <70 | <70 | | |
| 31-4 | EPT | 84 | <72 | <70 | <70 | | |
| 31-4 | NPT | | <71 | <70 | <70 | | |
| 31-4C | APT | | 72 | <70 | <70 | | |
| 31-6 | APT | | 75 | <70 | <70 | | |
| 32-2B | APT | | 71 | <70 | <70 | | |
| 32-3 | APT, WPT | | <70 | <70 | <70 | | |
| 32-3 | NPT | | 74 | <70 | <70 | | |
| 32-4 | APT, WPT | | 74 | <70 | <70 | | |
| 32-4 | NPT | | 76 | <70 | <70 | | |
| 32-4C | APT | | 73 | <70 | <70 | | |
| 32-4 | EPT | | 77 | <70 | | | |
| 33-3 | NPT | | 79 | <72 | <70 | <70 | |
| 33-4 | APT, WPT | | 74 | <70 | <70 | | |
| 33-4 | NPT | | 80 | 73 | <70 | <70 | |
| 33-4C | APT, WPT | | 79 | <72 | <70 | | |
| 41-6 | EPT | | 77 | <70 | <70 | | |
| 41-8 | APT | | 80 | 72 | <70 | | |
| 41-8 | EPT | | 79 | 72 | <70 | | |
| 41-12 | APT | | 82 | 75 | <70 | | |
| 42-6 | APT | | 79 | 71 | <70 | | |
| 42-6 | EPT | | 80 | 73 | <70 | | |
| 42-6 | NPT | | 79 | 72 | <70 | | |
| 42-8 | APT | | 81 | 74 | <70 | | |
| 42-8 | EPT | | 83 | 76 | <70 | | |
| 42-8 | NPT | | 80 | 73 | <70 | | |
| 42-10 | EPT | | 85 | 78 | 71 | | |
| 43-4 | EPT | | 81 | 74 | 72 | | |
| 43-6 | EPT | | 84 | 77 | 72 | | |
| 43-10 | APT | | 85 | 78 | 73 | | |
| 43-12 | APT | | | 79 | 74 | | |
| 44-6 | APT, WPT | | 81 | 74 | 74 | | |
| 44-6 | NPT | | 83 | 76 | 71 | <70 | |


COPYRIGHT © SULZER PUMPS FINLAND OY

| Pump size | Pump types | Pump rot. speed (rpm) | | | | | |
|---|---|---|---|---|---|---|---|
| | | 3550 | 1760 | 1180 | 880 | 710 | 590 |
| 44-8 | APT, NPT, WPT | | 84 | 77 | <70 | | |
| 51-10 | APT | | 88 | 81 | 76 | 72 | |
| 51-12 | APT | | | 83 | 78 | 73 | |
| 52-14 | APT | | | 84 | 79 | 75 | |
| 52-14 | EPT | | | - | - | | |
| 52-16 | APT | | | 88 | 82 | 78 | |
| 53-4 | APT, EPT, WPT | | 85 | 78 | 73 | <70 | |
| 53-6 | APT, WPT | | 87 | 80 | 75 | 71 | |
| 53-8 | APT, EPT, WPT | | 89 | 82 | 77 | 73 | |
| 53-10 | APT, WPT | | | 84 | 79 | 75 | |
| 53-10 | EPT | | 88 | 81 | 75 | 72 | |
| 53-10 | NPT | | | 81 | 77 | | |
| 53-12 | APT | | | 85 | 80 | 76 | |
| 53-12 | EPT | | 90 | 83 | 78 | 74 | |
| 54-12 | EPT | | | 84 | 79 | | |
| 54-16 | APT, WPT | | | 87 | 82 | 78 | 78 |
| 54-20 | APT | | | 91 | 86 | 83 | 79 |
| 54-20 | EPT | | | 86 | 82 | 78 | 76 |
| 55-4 | APT | | 90 | 83 | 78 | | |
| 55-8 | APT | | | 85 | 80 | 76 | 73 |
| 55-10 | APT | | | 87 | 82 | 78 | 75 |
| 55-12 | APT, EPT, WPT | | | 89 | 84 | 80 | 77 |
| 61-24 | WPT | | | | 91 | 86 | 83 |

**Table 6, Sound power level LwA / closed impellers (dB)**

| Pump size | Pump types | Pump rot. speed (rpm) | | | | | |
|---|---|---|---|---|---|---|---|
| | | 3550 | 1760 | 1180 | 880 | 710 | 59 |
| 51-12 | APT | | | 83 | | | |
| 53-8 | APT, EPT, WPT | | | 82 | | | |
| 53-10 | APT, WPT | | 89 | 84 | | | |
| 53-12 | APT | | | 85 | | | |
| 54-16 | APT, WPT | | | 90 | | | |
| 54-20 | APT | | | 91 | | | |
| 55-4 | APT | | 90 | 83 | | | |
| 55-8 | APT | | | 85 | | | |
| 55-10 | APT | | | 87 | | | |
| 55-12 | APT, EPT, WPT | | | 89 | | | |
| 61-24 | WPT | | | 100 | 95 | | |

## Open, special open and low pulse impellers

**Table 7, Sound pressure level LpA / open impellers (dB)**

| Pump size | Pump types | Pump rot. speed (rpm) | | | | | |
|---|---|---|---|---|---|---|---|
| | | 3550 | 1760 | 1180 | 880 | 710 | 590 |
| 11-1A | APT | <70 | <70 | <70 | | | |
| 11-1B | APT | <70 | <70 | <70 | | | |
| 11-2 | APT | 72 | <70 | <70 | | | |
| 21-2B | APT | 75 | <70 | <70 | | | |
| 21-3 | APT | 77 | <70 | <70 | | | |
| 22-1A | APT, WPT | | <70 | <70 | | | |
| 22-1B | APT | 74 | <70 | <70 | <70 | | |


COPYRIGHT © SULZER PUMPS FINLAND OY

| Pump size | Pump types | Pump rot. speed (rpm) | | | | | |
|---|---|---|---|---|---|---|---|
| | | 3550 | 1760 | 1180 | 880 | 710 | 590 |
| 22-2 | APT, WPT | 76 | <70 | <70 | <70 | | |
| 22-2B | APT | 79 | <70 | <70 | <70 | | |
| 22-3 | APT | 81 | <70 | <70 | <70 | | |
| 23-1B | APT | | <70 | <70 | <70 | | |
| 23-2 | APT, WPT | | <70 | <70 | <70 | | |
| 31-2B | EPT | | 72 | <70 | <70 | | |
| 31-4 | APT | 83 | <70 | <70 | <70 | | |
| 31-4 | EPT | | 72 | <70 | <70 | | |
| 31-4C | APT | | 73 | <70 | <70 | | |
| 31-6 | APT | | 75 | <70 | <70 | | |
| 32-2B | APT | | 72 | <70 | <70 | | |
| 32-3 | APT, WPT | | 72 | <70 | <70 | | |
| 32-4 | APT, WPT | | 74 | <70 | <70 | | |
| 32-4 | EPT | | 77 | <70 | | | |
| 32-4C | APT, WPT | | 76 | <70 | <70 | | |
| 33-4 | APT, WPT | | 76 | <70 | <70 | | |
| 33-4C | APT | | 79 | 72 | <70 | | |
| 41-6 | EPT | | 77 | <70 | <70 | | |
| 41-8 | APT | | 79 | 72 | <70 | | |
| 41-8 | EPT | | 80 | 72 | <70 | | |
| 41-12 | APT | | 82 | 74 | <70 | | |
| 42-6 | APT | | 79 | 71 | <70 | | |
| 42-6 | EPT | | 79 | 72 | <70 | | |
| 42-8 | APT | | 81 | 74 | <70 | | |
| 42-8 | EPT | | 83 | 75 | 71 | | |
| 42-10 | EPT | | 84 | 75 | 71 | | |
| 43-4 | EPT | | 81 | 74 | | | |
| 43-6 | EPT | | 84 | 77 | 72 | | |
| 43-10 | APT | | 85 | 78 | 73 | | |
| 43-12 | APT | | | 79 | 74 | | |
| 44-6 | APT, WPT | | 81 | 74 | <70 | | |
| 44-8 | APT, WPT | | 84 | 77 | 72 | | |
| 51-10 | APT | | 88 | 80 | 76 | <70 | |
| 51-12 | APT | | | 82 | 77 | 73 | |
| 52-14 | APT | | | 84 | 79 | 75 | |
| 52-16 | APT | | | 87 | 82 | 78 | |
| 53-4 | APT, EPT, WPT | | 85 | 78 | 73 | <70 | |
| 53-6 | APT, WPT | | 87 | 80 | 75 | <70 | |
| 53-8 | APT, WPT | | 89 | 82 | 77 | 73 | |
| 53-8 | EPT | | | 81 | 77 | 72 | |
| 53-10 | APT, WPT | | | 84 | 79 | 75 | |
| 53-10 | EPT | | | 78 | 73 | <70 | |
| 53-12 | APT | | | 85 | 80 | 76 | |
| 53-12 | EPT | | | 81 | 76 | 72 | |
| 54-16 | APT, WPT | | | 90 | 85 | 82 | 78 |
| 54-20 | APT | | | | 86 | 82 | 78 |
| 54-12 | EPT | | | 86 | 81 | 77 | |
| 55-4 | APT | | 90 | 82 | 77 | | |
| 55-8 | APT | | | 84 | 79 | 76 | 73 |
| 55-10 | APT | | | 86 | 82 | 78 | 75 |
| 55-12 | APT, EPT, WPT | | | 88 | 84 | 80 | 77 |


COPYRIGHT © SULZER PUMPS FINLAND OY

| Pump size | Pump types | Pump rot. speed (rpm) | | | | | |
|---|---|---|---|---|---|---|---|
| | | 3550 | 1760 | 1180 | 880 | 710 | 590 |
| 61-20 | APT, EPT | | | | 91 | 87 | 84 |
| 61-24 | APT, WPT | | | | 91 | 86 | 83 |
| 62-16 | APT | | | | 90 | 85 | 82 |

**Table 8, Sound power level LwA / open impellers (dB)**

| Pump size | Pump types | Pump rot. speed (rpm) | | | | | |
|---|---|---|---|---|---|---|---|
| | | 3550 | 1760 | 1180 | 880 | 710 | 590 |
| 11-1A | APT | | 96 | | | | |
| 11-1B | APT | | | 95 | | | |
| 11-2 | APT | | 95 | | | | |
| 21-2B | APT | | 97 | | | | |
| 21-3 | APT | | | 98 | | | |
| 22-1A | APT, WPT | | | | 94 | | |
| 22-1B | APT | | 98 | | | | |
| 22-2 | APT, WPT | | | 94 | | | |
| 22-2B | APT | | | 96 | | | |
| 22-3 | APT | | | | 99 | | |
| 23-1B | APT | | | | 99 | | |

## Vortex impellers

**Table 9, Sound pressure level LpA / vortex impellers (dB)**

| Pump size | Pump types | Pump rot. speed (rpm) | | | | | |
|---|---|---|---|---|---|---|---|
| | | 3550 | 1760 | 1180 | 880 | 710 | 590 |
| 21-2 | NPT | 76 | <70 | | | | |
| 21-80 | NPT | | <70 | | | | |
| 22-2 | NPT, WPT | | <70 | <70 | <70 | | |
| 22-3 | NPT | | 71 | <70 | <70 | | |
| 31-4 | NPT | | 73 | <70 | <70 | | |
| 32-3 | NPT, WPT | | 76 | <70 | <70 | | |
| 32-4 | NPT, WPT | | 77 | <70 | <70 | | |
| 32-4C | WPT | | 79 | 72 | <70 | | |
| 33-3 | NPT | | 79 | 72 | <70 | <70 | |
| 33-4 | NPT, WPT | | 80 | 72 | <70 | <70 | |
| 42-6 | NPT | | 81 | 74 | <70 | | |
| 42-8 | NPT | | 82 | 75 | <70 | | |
| 44-6 | NPT, WPT | | 84 | 78 | 72 | <70 | |
| 44-8 | NPT, WPT | | | 78 | 72 | | |
| 53-4 | WPT | | | | 72 | <70 | |
| 53-6 | WPT | | | | 74 | 72 | |
| 53-8 | WPT | | | | 75 | 73 | |
| 53-10 | NPT, WPT | | | | 77 | 76 | |


COPYRIGHT © SULZER PUMPS FINLAND OY

## 9.3 Maximum size of solid particles

The maximum sizes of solid spherical particles which can flow through the pump (casing/impeller) are presented in Table 10.

**Table 10, Max. size of solid particles (Ø in)**

| Pump size | Pump types | Impeller type | | | | | | | |
|---|---|---|---|---|---|---|---|---|---|
| | | Closed1 | Closed2 | Open1 | Open2 | Special open1 | Special open2 | Vortex1 | Low pulse1 |
| 11-1A | APT | 0.16 | - | 0.31 | - | - | - | - | - |
| 11-1B | APT | 0.31 | - | 0.47 | - | - | - | - | - |
| 11-2 | APT | 0.41 | - | 0.63 | - | - | - | - | - |
| 21-2 | NPT | 0.98 | - | - | - | - | - | 1.38 | - |
| 21-2B | APT | 0.63 | - | 0.87 | - | - | - | - | - |
| 21-3 | APT | 0.91 | - | 1.18 | - | - | - | - | - |
| 21-3 | NPT | 1.77 | - | - | - | - | - | 1.97 | - |
| 22-1A | APT | - | - | 0.28 | - | - | - | - | - |
| 22-1A | WPT | - | - | 0.28 | - | - | - | - | - |
| 22-1B | APT | 0.20 | - | 0.39 | - | - | - | - | - |
| 22-2 | APT | 0.31 | - | 0.55 | - | - | - | - | - |
| 22-2 | NPT | 0.98 | - | - | - | - | - | 1.38 | - |
| 22-2 | WPT | 0.39 | - | 0.71 | - | - | - | 0.87 | - |
| 22-2B | APT | 0.47 | - | 0.71 | - | - | - | - | - |
| 22-3 | APT | 0.71 | - | 0.94 | - | 0.94 | - | - | - |
| 22-3 | NPT | 1.77 | - | - | - | - | - | 1.97 | - |
| 23-1B | APT | - | - | 0.35 | - | - | - | - | - |
| 23-2 | APT | 0.24 | - | 0.49 | - | - | - | - | - |
| 23-2 | WPT | 0.35 | - | 0.79 | - | - | - | - | - |
| 31-2B | EPT | 0.35 | - | 0.35 | - | - | - | - | - |
| 31-4 | APT | 0.98 | - | 1.26 | - | - | - | - | - |
| 31-4 | EPT | 0.55 | - | 0.59 | - | - | - | - | - |
| 31-4 | NPT | 2.17 | - | - | - | - | - | 2.36 | - |
| 31-4C | APT | 1.26 | - | 1.42 | - | - | - | - | - |
| 31-6 | APT | 1.57 | - | 1.61 | - | - | - | - | - |
| 32-2B | APT | 0.35 | - | 0.63 | - | - | - | - | - |
| 32-3 | APT | 0.51 | - | 0.87 | - | 1.30 | - | - | - |
| 32-3 | NPT | 1.77 | - | - | - | - | - | 1.97 | - |
| 32-3 | WPT | 0.63 | - | 1.06 | - | - | - | 1.18 | - |
| 32-4 | APT | 0.71 | - | 0.94 | - | 0.94 | - | - | - |
| 32-4 | EPT | 0.71 | - | 0.71 | - | - | - | - | - |
| 32-4 | NPT | 2.17 | - | - | - | - | - | 2.36 | - |
| 32-4 | WPT | 0.71 | - | 1.26 | - | - | - | 1.38 | - |
| 32-4C | APT | 1.02 | - | 1.26 | - | 1.26 | - | - | - |
| 32-4C | WPT | 1.02 | - | 1.65 | - | | - | 1.57 | - |
| 33-3 | NPT | 1.77 | - | - | - | - | - | 1.97 | - |
| 33-4 | APT | 0.51 | - | 0.71 | - | 1.14 | - | - | 0.24 |
| 33-4 | NPT | 2.17 | - | - | - | - | - | 2.36 | - |
| 33-4 | WPT | 0.63 | - | 1.18 | - | - | - | 1.34 | - |
| 33-4C | APT | 0.87 | - | 1.14 | - | 1.14 | - | - | 0.43 |
| 41-6 | EPT | 1.42 | - | 1.38 | - | - | - | - | - |
| 41-8 | APT | 1.69 | - | 1.85 | - | 2.13 | - | - | - |
| 41-8 | EPT | 1.85 | - | 1.65 | - | - | - | - | - |
| 41-12 | APT | 1.81 | - | 2.20 | - | 2.76 | - | - | - |
| 42-6 | APT | 1.34 | - | 1.50 | - | 1.50 | - | - | - |


COPYRIGHT © SULZER PUMPS FINLAND OY

| Pump size | Pump types | Impeller type | | | | | | | |
|---|---|---|---|---|---|---|---|---|---|
| | | Closed1 | Closed2 | Open1 | Open2 | Special open1 | Special open2 | Vortex1 | Low pulse1 |
| 42-6 | EPT | 1.18 | - | 1.10 | - | - | - | - | - |
| 42-6 | NPT | 2.95 | - | - | - | - | - | 3.15 | - |
| 42-8 | APT | 1.38 | - | 1.89 | - | 1.93 | - | - | - |
| 42-8 | EPT | 1.54 | - | 1.54 | - | - | - | - | -- |
| 42-8 | NPT | 3.35 | - | - | - | - | - | 3.35 | -- |
| 42-10 | EPT | 2.13 | - | 2.13 | - | - | - | - | - |
| 43-4 | EPT | 0.63 | - | 0.63 | - | - | - | - | - |
| 43-6 | EPT | 0.94 | - | 1.06 | - | - | - | - | - |
| 43-10 | APT | 2.13 | - | 2.44 | - | 2.48 | - | - | - |
| 43-12 | APT | 2.09 | - | 2.13 | - | 2.80 | - | - | - |
| 44-6 | APT | 1.06 | - | 1.06 | - | 1.06 | - | - | 0.39 |
| 44-6 | NPT | 2.95 | - | - | - | - | - | 2.95 | - |
| 44-6 | WPT | 1.18 | - | 1.73 | - | - | - | 1.97 | - |
| 44-8 | APT | 1.61 | - | 1.81 | - | 1.81 | - | - | 0.75 |
| 44-8 | NPT | 3.35 | - | - | - | - | - | 3.15 | - |
| 44-8 | WPT | 1.61 | - | 2.13 | - | - | - | 2.36 | - |
| 51-10 | APT | 2.05 | - | 2.13 | - | 2.13 | - | - | 0.91 |
| 51-12 | APT | 1.89 | - | 2.72 | - | 2.72 | - | - | 1.18 |
| 52-14 | APT | 2.56 | - | 2.48 | - | 3.31 | - | - | - |
| 52-14 | EPT | 2.48 | - | 2.48 | - | 2.48 | - | | |
| 52-16 | APT | 2.87 | - | 3.74 | - | 3.74 | - | - | - |
| 53-4 | APT | 0.67 | - | 1.06 | - | - | - | - | 0.39 |
| 53-4 | EPT | 0.67 | - | 0.94 | - | - | - | - | - |
| 53-4 | WPT | 0.71 | - | 1.46 | - | - | - | 1.57 | - |
| 53-6 | APT | 1.14 | - | 1.54 | - | - | - | - | 0.59 |
| 53-6 | WPT | 1.30 | - | 2.05 | - | - | - | 2.28 | - |
| 53-8 | APT | 1.38 | - | 1.38 | - | 1.38 | - | - | 0.51 |
| 53-8 | EPT | 1.26 | 1.26 | 1.26 | 1.26 | 1.26 | - | - | - |
| 53-8 | WPT | 1.50 | - | 2.17 | - | - | - | 2.40 | - |
| 53-10 | APT | 1.93 | - | 1.93 | - | 1.93 | - | - | 0.79 |
| 53-10 | EPT | 1.85 | - | 1.89 | - | - | - | - | - |
| 53-10 | NPT | 4.45 | - | - | - | - | - | 4.45 | - |
| 53-10 | WPT | 2.05 | - | 2.76 | - | - | - | 3.03 | - |
| 53-12 | APT | 2.44 | - | 2.52 | - | 2.52 | - | - | 1.06 |
| 53-12 | EPT | 2.56 | 2.56 | 2.17 | - | - | - | - | - |
| 54-12 | EPT | 2.60 | - | 2.60 | - | - | - | - | - |
| 54-16 | APT | 2.91 | - | 2.91 | - | 3.70 | - | - | - |
| 54-16 | WPT | 4.13 | - | 4.33 | - | - | - | - | - |
| 54-20 | APT | 4.45 | - | 4.45 | - | 4.45 | - | - | - |
| 54-20 | EPT | 3.15 | - | - | - | - | - | - | - |
| 55-4 | APT | 1.18 | - | 1.18 | - | - | - | - | - |
| 55-8 | APT | 1.34 | - | 1.81 | - | - | - | - | - |
| 55-10 | APT | 1.69 | - | 1.69 | - | 1.69 | - | - | - |
| 55-12 | APT | 2.64 | - | 2.68 | - | 2.68 | - | - | - |
| 55-12 | EPT | 2.40 | - | 2.64 | - | | - | | |
| 55-12 | WPT | 2.40 | - | 3.11 | - | - | - | - | - |
| 61-20 | APT | - | - | 3.39 | 3.39 | 4.21 | 4.21 | - | - |
| 61-20 | EPT | | - | 4.21 | 4.21 | 4.21 | 4.21 | | |
| 61-24 | APT | - | - | 5.20 | 5.20 | 5.20 | 5.20 | - | - |
| 61-24 | WPT | 5.24 | - | 5.91 | - | - | - | - | - |


COPYRIGHT © SULZER PUMPS FINLAND OY

| Pump size | Pump types | Impeller type | | | | | | | |
|---|---|---|---|---|---|---|---|---|---|
| | | Closed1 | Closed2 | Open1 | Open2 | Special open1 | Special open2 | Vortex1 | Low pulse1 |
| 62-16 | APT | - | - | 5.20 | 5.20 | 5.20 | 5.20 | - | - |

## 9.4 Tightening instruction for the flanges of AHLSTAR pumps

1 The purpose of the tightening torque is to provide an adequate pre-tightening for the flange connection via screw forces. The friction forces influencing in the screw thread and head have a great importance here. This is why it is always necessary to lubricate both the threaded surface of the screw and the washer of the screw before installation. The values in this instruction are based on a value of 0.20, which corresponds to slightly oiled joint surfaces. If the friction coefficient μf of the selected lubricant differs greatly from this, the tightening torque must be corrected using value:

$$k = \frac{\mu_f}{0{,}20}$$

Secondary flange forces, which may arise during tightening and which are the result of the misalignment of the flanges, must be minimised. It is recommended to pre-weld the pipes so that the backing flanges are attached to the flanges of the pump. In this case, there is no need to use the full torque. The permitted misalignments on the sealing surfaces are presented in Table 11. The values are measured from the extreme edge of the sealing surface.

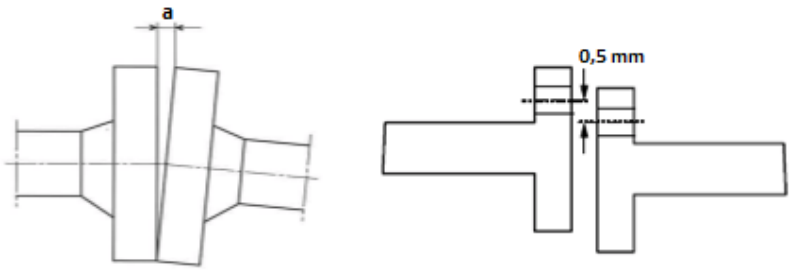


**Table 11, Permitted misalignments on sealing surfaces**

| Nominal size of connection | Permitted misalignment on sealing surfaces (a) |
|---|---|
| ≤ NPS 6 | 0,008” |
| > NPS 6 | 0,016” |

2 The use of washers is recommended. When the screw is ≤ 1’’, one washer is used, and when the screw is >1’’, two washers are used.

3 Check the cleanliness of the sealing surfaces before installation. If necessary, clean the sealing surfaces with a soft brush in the direction of the circumference, not in the direction of the radius.

4 The use of different material groups (carbon steel - stainless) in the flanges and screws may lead to a harmful change in the internal forces of the connection as the temperature changes, and is therefore prohibited.

5 The screws must be tightened using a torque wrench which is calibrated every two years in accordance with ISO 6789.

6 The tightening must be performed in four stages. Follow the order given in Fig. 2 and first tighten 30% of the final torque. After this, follow the same order and tighten 60% of the final torque. In the third stage, tighten the screws to the final torque in the same order. Finally, secure the torque by tightening the screws clockwise using the final value. The permissible torques depend on the flange standard used. The permissible torques can be found in tables 11 to 13.


COPYRIGHT © SULZER PUMPS FINLAND OY

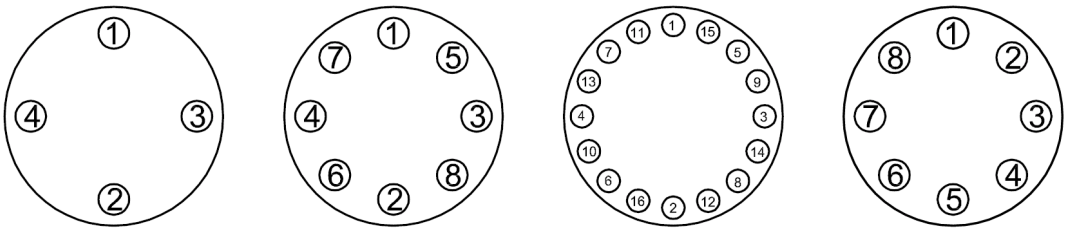

Fig. 2

The tightening torques must be checked within 24 hours from commissioning.

7 The following maximum torques have been calculated assuming that the friction coefficient is 0.2. The effect of the friction coefficient must be taken into account by using the ratio given under item 1.

**C A U T I O N**

Exceeding the maximum torques can lead to permanent deformations in the flanges.

8 The screws used in the calculations are full-threaded hexagon head screws in accordance with ANSI B18.2.1 UNC.

9 The values have been calculated according to ASME BPVC VIII-8 so that the stresses in the flange do not exceed 0.8 x yield strength of the flange at the design temperature of 356°F. It should be noted that these are the maximum torques in accordance with the strength of the flange, and the actual torque must be selected on the basis of the seal used and the operating conditions.

**W A R N I N G**

The maximum torque values given in Table 12 must be multiplied by the following factors: 0.55 for a carbon steel case, 1.0 for a duplex steel case and stainless steel case.

**Table 12, Flange drillings of steel cases, maximum torques**

| NPS | Torque (ft lbf) | | | |
|---|---|---|---|---|
| | ASME B16.5 Class 150 | | ASME B16.5 Class 300 | |
| | A325 | A354 | A325 | A354 |
| 1 1/4” | 74 | 74 | 74 | 74 |
| 1 1/2” | 118 | 118 | 103 | 103 |
| 2” | 148 | 148 | 59 | 59 |
| 2 1/2” | 258 | 258 | 118 | 118 |
| 3” | 310 | 310 | 133 | 133 |
| 4” | 125 | 125 | 133 | 133 |
| 5” | 214 | 214 | 155 | 155 |
| 6” | 288 | 288 | 118 | 118 |
| 8” | 295 | 295 | 148 | 148 |
| 10” | 347 | 347 | 221 | 221 |
| 12” | 347 | 347 | 280 | 280 |
| 14” | 406 | 406 | 192 | 192 |
| 16” | 443 | 443 | 325 | 325 |
| 20” | 885 | 885 | 487 | 487 |


COPYRIGHT © SULZER PUMPS FINLAND OY

| NPS | Torque (ft lbf) | | | |
|---|---|---|---|---|
| | ASME B16.5 Class 150 | | ASME B16.5 Class 300 | |
| | A325 | A354 | A325 | A354 |
| 24” | 966 | 966 | 583 | 583 |
| 28” | 1165 | 1165 | 826 | 826 |

**Table 13, Flange drillings of cast iron cases, maximum torques**

| NPS | Torque (ft lbf) | |
|---|---|---|
| | ASME B 16.1 Class 125 | |
| | A325 | A354 |
| 1 1/4” | 22 | 22 |
| 1 1/2” | 37 | 37 |
| 2” | 48 | 48 |
| 2 1/2” | 77 | 77 |
| 3” | 96 | 96 |
| 4” | 41 | 41 |
| 5” | 70 | 70 |
| 6” | 89 | 89 |
| 8” | 94 | 94 |
| 10” | 111 | 111 |
| 12” | 103 | 103 |
| 14” | 118 | 118 |
| 16” | 133 | 133 |
| 20” | 266 | 266 |
| 24” | 310 | 310 |
| 28” | 354 | 354 |


COPYRIGHT © SULZER PUMPS FINLAND OY

SULZER

SPP id: 170201 / Replaces 120601 / en / **N31569** / 3

# AHLSTAR

## PROCESS PUMPS

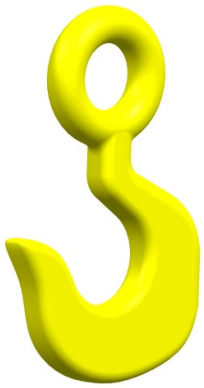

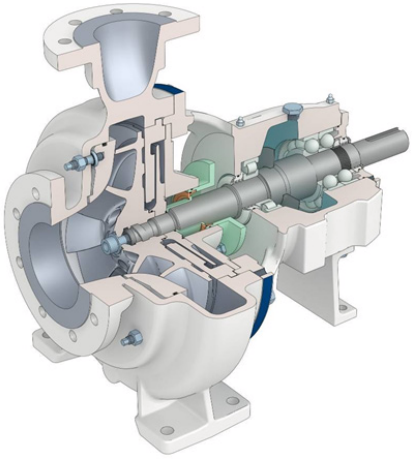

**Hoisting and transfers**


1 Safety measures

2 Hoisting and transfers




COPYRIGHT © SULZER PUMPS FINLAND OY

# 1 Safety measures

The total gross and net weights of the delivery are always found in the packing list affixed to the product or packing.

**WARNING**

Hoisting and transfers instructions must be strictly followed to avoid dropping of crates or individual assemblies.

Special attention is to be paid to the stability of

- Pump
- Pump and baseplate with or without motor
- Spare parts

The center of gravity with these items should always be checked before hoistings and transfers.

Personal protective equipment such as helmet, safety shoes and gloves is to be used.

If suitable lifting equipment is not available, heavy assemblies must be transferred by using skids etc. on the ground level.

Lifting accessories must bear the identification of the manufacturer, material and the maximum working load.

Lifting ropes used directly for lifting or supporting the pump or pump unit must not include any splicing other than at their ends. Textile ropes and slings must not include any knots, connections or splicing other than at the ends of the sling, except in the case of an endless sling.

The lifting accessories must always be able to adequately support the hoisted assembly.

The lifting ropes must be adequate, and they must be adjusted so that the product is not damaged during hoisting. A lifting chain must not be in contact with the product during hoisting (if it is, painted and machined surfaces may be damaged).

**WARNING**

Make sure that accepted and undamaged ropes and lifting accessories are available. The lifting capacity of the lifting accessories and ropes must correspond to the weight of the goods lifted.

**WARNING**

Never stand under a hanging load.

**WARNING**

In a potentially explosive environment, the pump must be lifted and transferred so that no sparking can occur.


COPYRIGHT © SULZER PUMPS FINLAND OY

# 2 Hoisting and transfers

The figures are for reference only, and the actual product and lifting equipment may differ from those presented.

| N O T E |
|---|
| If the ordered assembly contains:<br>- an API baseplate, follow the enclosed lifting instruction N31478, or<br>- a Heavy Duty baseplate, follow the enclosed lifting instruction N31481. |

The crates or individual assemblies must never be dropped to the ground during transfer. Refer to Figures 1 - 12 for examples of proper lifting techniques.

Fig. 1 .....The transportation crate is hoisted according to figure 1. The permissible lifting points are marked on the crate.

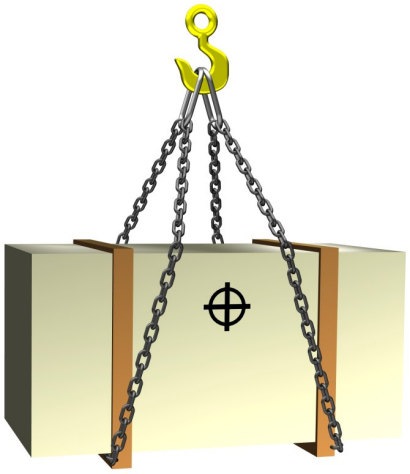

Fig. 1


COPYRIGHT © SULZER PUMPS FINLAND OY

Fig. 2.....The pump-motor-baseplate assembly is hoisted from under the suction case of the pump and from under the motor.

Fig. 3.....With tangential pumps, also ensure the balance of hoisting by means of a lifting eye fastened to the discharge flange.

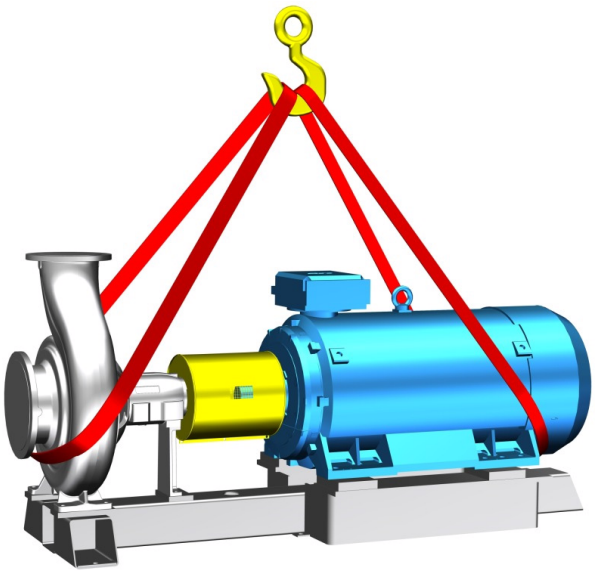

Fig. 2

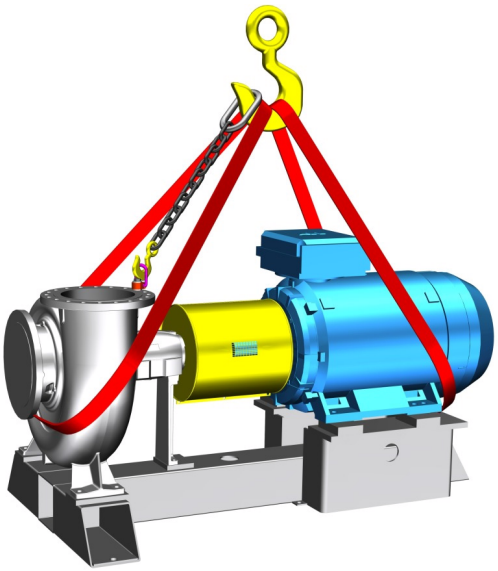

Fig. 3

Fig. 4.....The pump-baseplate assembly is hoisted from under the suction flange of the pump and from the lifting eyes fastened to the baseplate.

Fig. 5.....With tangential pumps, also ensure the balance of hoisting by means of a lifting eye fastened to the discharge flange.

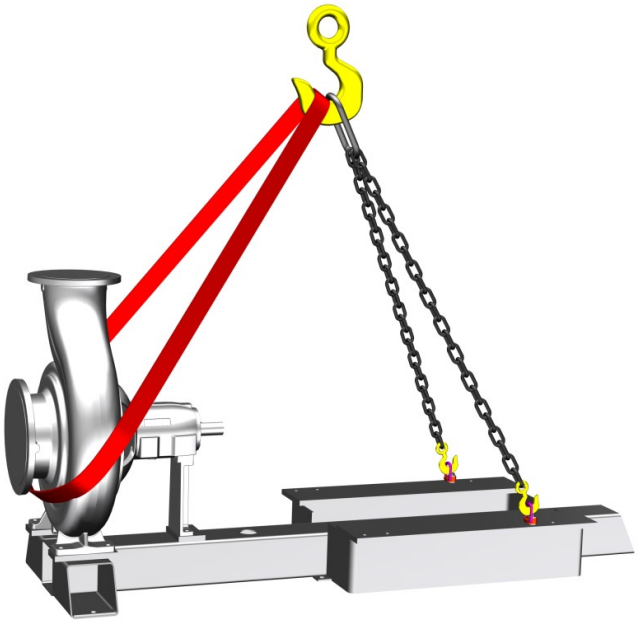

Fig. 4

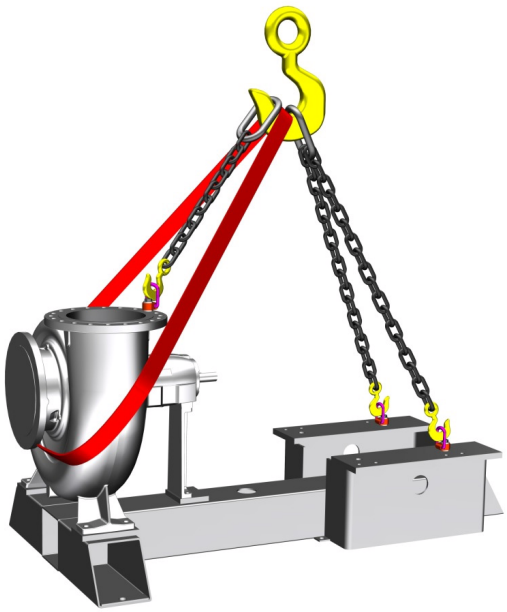

Fig. 5


COPYRIGHT © SULZER PUMPS FINLAND OY

Fig. 6.....The radial pump is hoisted from the lifting eyes fastened to the discharge flange of the pump.

Fig. 7.....The tangential pump is hoisted from the lifting eyes fastened to the suction and discharge flanges of the pump and to the end of the shaft. Pay attention to the centre of gravity.

Fig. 6

Fig. 7

**Wet end**

Fig. 8.....The radial volute case is hoisted from the lifting eyes fastened to the discharge flange.

Fig. 9.....The tangential volute case is hoisted from the lifting eyes fastened to the discharge flange. It is recommended to place the lifting eyes symmetrically with respect to the division plane of the volute case and as close to each other as possible. Pay attention to the centre of gravity.

Fig. 8

Fig. 9


COPYRIGHT © SULZER PUMPS FINLAND OY

**Spare parts and coupling**

Fig. 10.....Heavy (> 25 kg) individual components can be lifted for example on a pallet.

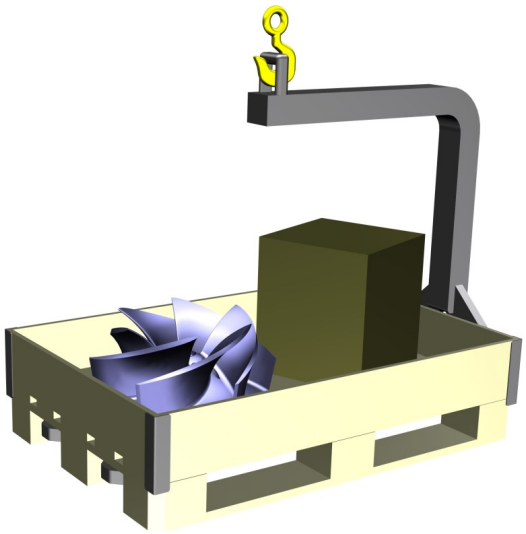

Fig. 10

**Bearing parts**

Fig. 11.....The bearing is hoisted from the openings in the bearing housing and from the shaft.

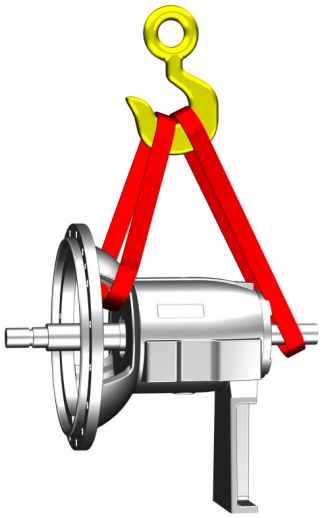

Fig. 11


COPYRIGHT © SULZER PUMPS FINLAND OY

**Baseplate**

Fig. 12.....The baseplate is hoisted from the lifting eyes fastened to the mounting holes.

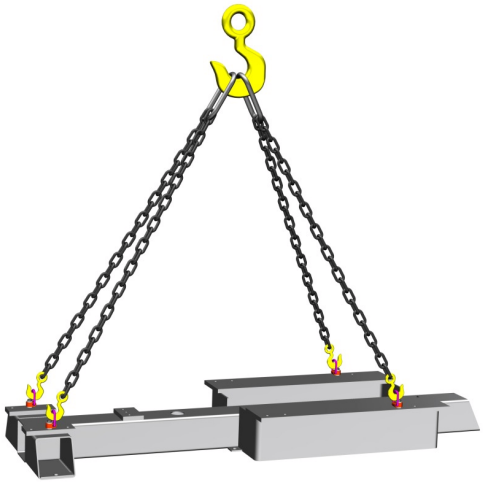

Fig. 12

## 2.1 Motor, gear and other accessories

When hoisting the motor, gear and other accessories, the instructions provided by the relevant manufacturer must always be followed.

## 2.2 Accessories

If the assembly includes accessories such as a noise cover, the cover may have to be removed before hoisting the assembly in order to prevent the cover from being damaged.


COPYRIGHT © SULZER PUMPS FINLAND OY

SULZER

SPP id: 110901 / en / **N31570** / 1

# AHLSTAR

## PROCESS PUMPS

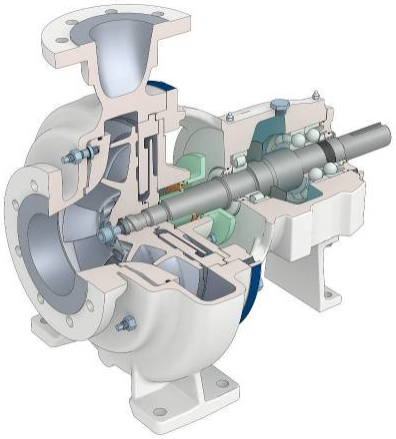

**Commissioning**


**1 Purchase inspection**

**2 Storage**




COPYRIGHT © SULZER PUMPS FINLAND OY

# 1 Purchase inspection

Check carefully that the delivery meets your order and is in accordance with the packing list and parts list of the pump. Inform the supplier immediately about any defects or damage observed.

Do not remove the cover plates or plugs protecting the openings before the installation of pipes. Foreign particles inside the pump may damage it at starting.

Examine the crate and wrapping before discarding them since parts and accessories are sometimes wrapped individually or fastened into the crate.

If the pump unit is not installed immediately, it should be stored under conditions that will prevent deterioration due to damage and/or corrosion. The long-term storage requirements should always be specified in the purchase order.

# 2 Storage

## 2.1 Short-term (less than 3 months)

When it is necessary to store a pump for a short term before the installation, it must be stored in a dry location where it cannot be affected by dirt or corrosion. Protection plates on the pump openings should not be removed.

The pump bearings and drive elements must be properly protected against any foreign matter. To prevent rusting or seizing, lubricate the pump unit before storing and turn the pump shaft by hand at least once every two weeks.

## 2.2 Long-term

| NOTE |
|---|
| The grease/oil lubricants must be changed before the pump is taken into use. |

| WARNING |
|---|
| The rust preventives must be cleaned off carefully before the pump is taken into use. Solvents containing rust preventives can cause irritation to the skin and/or the respiratory system. Prolonged physical contact and breathing of vapor are to be avoided. |

If the pump or pump unit is stored for more than 3 months, the following procedures must be observed:

- Store the product in a dry place.
- Drain any liquid from the pump.
- Rotate the pump shaft by hand at least once every month to prevent bearing damage.
- With cast iron pumps equipped with gland packing, remove the gland packings (461.21) from the stuffing box and apply rust preventives in the stuffing box.
- With oil lubrication, the bearing unit is emptied of oil before the delivery. Fill the bearing unit with oil or coat the interior of the unit with a rust preventing film.
- Apply rust preventing agents to the unprotected parts, such as the shaft end, pump flanges and coupling. If necessary, protect the volute casing and shaft sealing with volatile corrosion inhibitors.


COPYRIGHT © SULZER PUMPS FINLAND OY

- Observe the storage instructions of any accessory equipment (e.g. electric motors) included in the delivery.
- If the pump unit is covered with a plastic sheet, the bottom should remain open to allow for ventilation.


COPYRIGHT © SULZER PUMPS FINLAND OY

SULZER

SPP id: Version 14 > / 170201 / Replaces 130131 / en / **N31794** / 3

# AHLSTAR

## PROCESS PUMPS

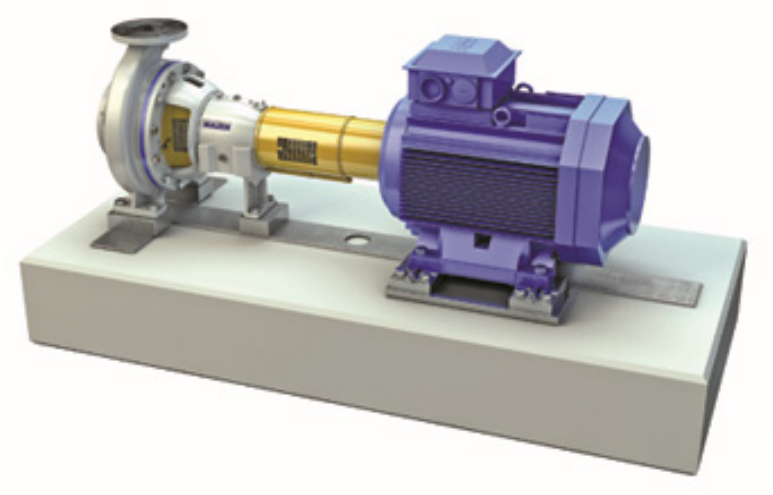

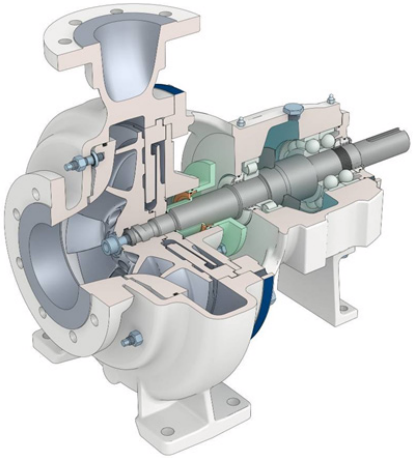

**Installation at the site**


| | |
|---|---|
| 1 | Safety procedures before installation |
| 2 | Wet end |
| 3 | Sealing unit |
| 4 | Coupling unit |
| 5 | Baseplate |
| 6 | Drive motor |



COPYRIGHT © SULZER PUMPS FINLAND OY

# 1 Safety procedures before installation

| NOTE |
|---|
| A pump should have adequate space for proper installation and maintenance actions. |

All parts for the installation must be thoroughly cleaned before the installation. All traces of antirust agents should be cleaned off from the pump flanges, shaft assembly and drive elements. Avoid any damage to installed parts when handling them.

| WARNING |
|---|
| Personal protective equipment such as helmet, safety shoes and gloves are to be used. |

Equipment used in explosive locations must conform to the requirements of "Ex" protection. Verify this in documentation (and machine plates) relating to the equipment and auxiliary devices. Fig. 1.

Fig. 1

## Fastener information

Table 1 shows the rated and maximum moments of torque for fasteners presented in these instructions. These shown values are only valid for fasteners where the moment values are not separately given.

**Table 1, Fastener information**

| Screw size | Moments (lb ft) | |
|---|---|---|
| | Rating | Max. value |
| 3/16 | 2.6 | 3.0 |
| 1/4 | 4.4 | 5.0 |
| 5/6 | 10.3 | 13.0 |
| 3/8 | 22.1 | 26.0 |
| 1/2 | 36.9 | 44.0 |
| 5/8 | 96 | 118.0 |
| 3/4 | 184.4 | 221.0 |
| 1 | 309.8 | 383.0 |
| 1 1/8 | 590.1 | 738.0 |


COPYRIGHT © SULZER PUMPS FINLAND OY

# 2 Wet end

## 2.1 Pipework

### Supporting

The pipes must be mounted and supported so that the piping does not exert on the pump forces which exceed the values given under item “Safety instructions/Admissible forces and moments on pump flanges”. When planning the support locations remember the allowance for thermal expansion. Fig. 2.

Fit the pipe flanges accurately to the pump flanges. Flanges which have not been properly aligned must not be forced to position.

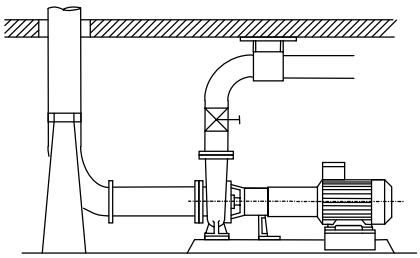

Fig. 2

### Suction pipe below the pump

The suction pipe must be made as short as possible. Avoid points where air pockets or turbulence may be formed.

If the liquid level is below the pump, the suction pipe must gradually rise towards the pump. A sufficient length of the pipe end must be under the liquid level so that air cannot enter the pump. Fig. 3.

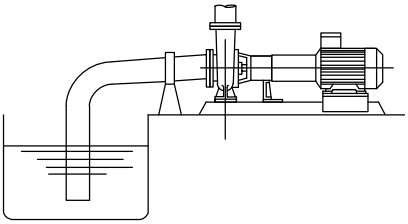

Fig. 3

### Suction pipe above the pump

The suction pipe must descend gradually towards the pump. Fig. 4.

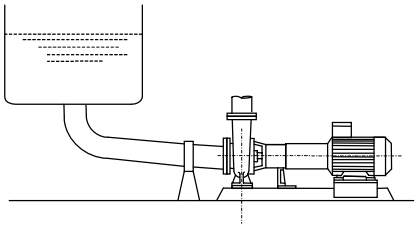

Fig. 4


COPYRIGHT © SULZER PUMPS FINLAND OY

## Extension piece

The cones must be eccentric and in such a position that the upper level will be horizontal, alternative A in Fig. 5. If extension pieces are used, they must be formed so that gathering of gases cannot occur. At higher consistencies (c > 4 %), conical pipe parts must be avoided, alternative B in Fig. 5.

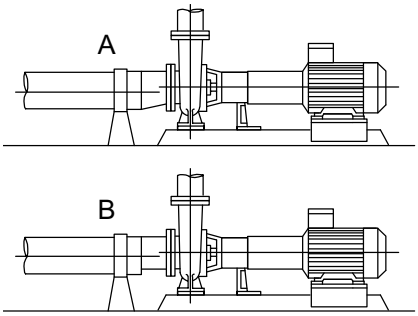


Fig. 5

## Suction pipe design

**WARNING**

If there is a possibility of a dangerous return flow after the shutdown of the pump, a nonreturn device shall be installed in the outlet piping.

**CAUTION**

Never use the pump as a support for the piping system.

If the suction pipe has branches, they must be located as far from the pump as possible, and they must be formed advantageously with regard to the flow. The suction pipe must always be made as short as possible. Fig. 6.

A shut-off valve must be placed in the discharge pipe after the potential check valve. Before commissioning, clean the piping and suction pit carefully. Tools or other things left inside the pump will damage the pump already at testing.

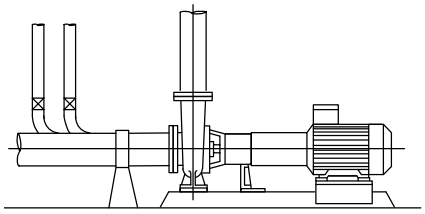

Fig. 6


COPYRIGHT © SULZER PUMPS FINLAND OY

# 3 Sealing unit

## 3.1 Auxiliary piping

### Piping for shaft seal

In order to ensure trouble-free operation of the shaft seal, it must be provided with sealing, flushing or cooling liquid in certain applications in accordance with the sectional drawing and the parts list. The nominal sizes of the connections are also given in the parts list and dimensional drawing of the pump.

The nominal pressure of the sealing liquid must be as high as the nominal pressure of the pump, and its maximum temperature must be as high as the maximum temperature of the pump.

The sealing water equipment is installed in the pump. In certain sealing systems, the sealing liquid equipment contains a back-pressure valve; see sectional drawing.

Clean the sealing liquid piping carefully before installation and commissioning.

The reservoir of the seal pot sealing water equipment must be installed in a vertical position at least 500 mm above the center line of the shaft seal. Install the pipes as short as possible so that the shaft seal is the lowest point.

### Piping for degassing in an air separating pump (-R)

The piping for degassing is connected to the degassing outlet (C50.21) of the pump, Fig. 7. The degassing outlet can be on the left or right side of the pump depending on the design alternative, Fig. 7. The precise size and direction of the connection are shown in the dimensional drawing.

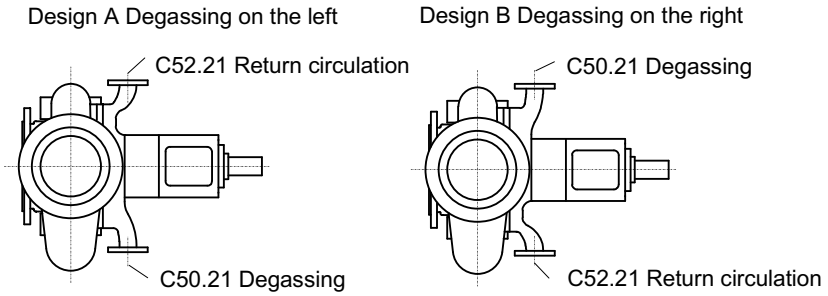


Fig. 7

In order to prevent the pumped liquid from flowing out while the pump is not running, the piping is often supplied with a shut-off valve (ball valve) equipped with an open-closed actuator. The control of the valve must be arranged so that the valve is open while the motor of the pump is running and otherwise closed.

If a separate degassing pump (vacuum pump) is used, there is also a separate vacuum relief valve.

The size of the degassing pipe is determined by the amount of gas, the length of the pipe, the risk of clogging, etc. The pipe size generally suitable is shown in Table 2.

**Table 2, Suitable pipe sizes for degassing and return circulation**

| Sealing unit size | Outlet size C50.21 and C52.21 | Suitable pipe size |
|---|---|---|
| 11 | NPS1 | NPS1 or NPS 1 1/4 |
| 21, 22, 23 | NPS1 1/2 | NPS1 1/2 |
| 31, 32, 33 | NPS1 1/2 | NPS1 1/2 |
| 42, 43, 44 | NPS1 1/2 | NPS1 1/2 |
| 51, 52, 53, 54, 55 | NPS2 | NPS2 or NPS2 1/2 |
| 61, 62 | NPS3 | NPS3 or NPS4 |


COPYRIGHT © SULZER PUMPS FINLAND OY

## Return circulation piping in an air separating pump (-R)

The piping for the return circulation connects the return circulation outlet (C52.21) of the air separating design (-R) with the suction pipe of the pump, Fig. 8.

The piping for the return circulation should be installed so as to minimize friction losses. Table 2 shows the suitable pipe size. The return circulation pipe can be equipped with a shut-off valve and sight glass if necessary.

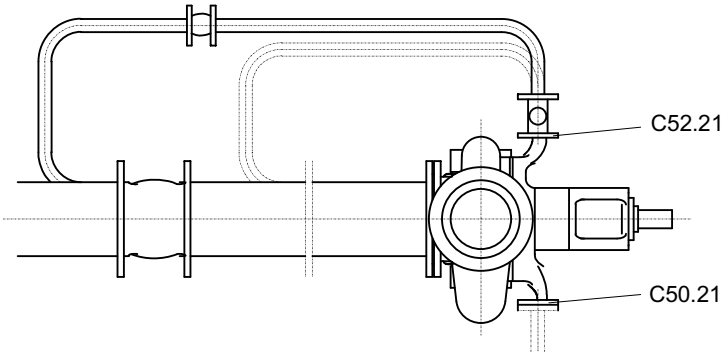


Fig. 8

## Piping for degassing in a liquid ring pump (-S)

Connect the degassing piping to the degassing connection (C50.21) of the pump. The degassing connection of the -S design liquid ring pump can be either on the right or left side of the pump. The precise size and direction of the connection are shown in the dimensional drawing.

**W A R N I N G**

Some of the pumped liquid will run out of the degassing connection during pumping. Lead and handle this liquid appropriately.

The mixture of gas and liquid discharging from the degassing connection is led back into the process, see examples in Figures 9, 10 and 11.

The suitable pipe size for the degassing piping is determined on the basis of pipe length, clogging risk etc. Normally, the suitable pipe size is one corresponding to the size of the degassing connection or the following larger size.

A vacuum relief valve and a pressure gauge, connected to the connection (C34.21) opposite the degassing connection, are usually included in the degassing piping.


COPYRIGHT © SULZER PUMPS FINLAND OY

## Starting with a straight suction pipe, GP1/GP2

It is recommended to use a suction grid in front of the pump:

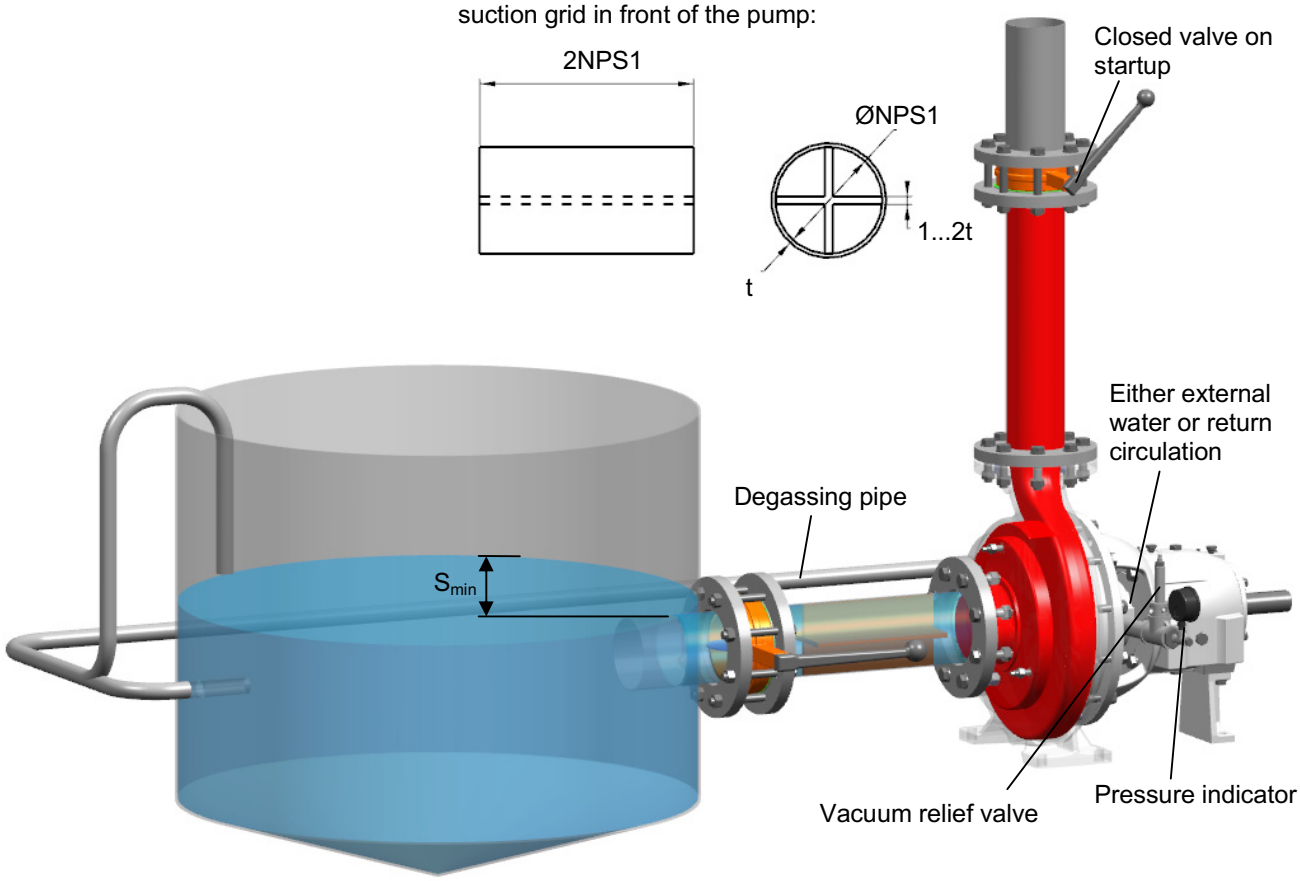


The degassing pipe must be taken over the edge of the tank, and the end of the pipe must remain above the surface of the liquid level in the tank. An ascending section in the degassing pipe decreases the capacity of the liquid ring pump. If necessary, the degassing pipe can be taken into the tank through the side of the tank, as far as possible from the suction pipe of the pump.

Minimum surface level above the suction pipe:

$$S_{min} = \max\begin{cases} 5 \text{ x } H_{dyn} \\ 4 \text{ x } NPS1 \end{cases}$$

$$H_{dyn} = \frac{U_s^2}{2 \times g} \text{ ft}$$

$$U_s = \frac{Q}{448.8 \times \pi \text{ x } \left(\frac{NPS1}{24}\right)^2} \qquad , g = 32.174 \frac{ft}{s^2}$$

Q, flow rate in USGPM
NPS1, suction diameter in inches

Fig. 9


COPYRIGHT © SULZER PUMPS FINLAND OY

## Starting with a straight suction pipe, liquid level beneath the pump, GP3

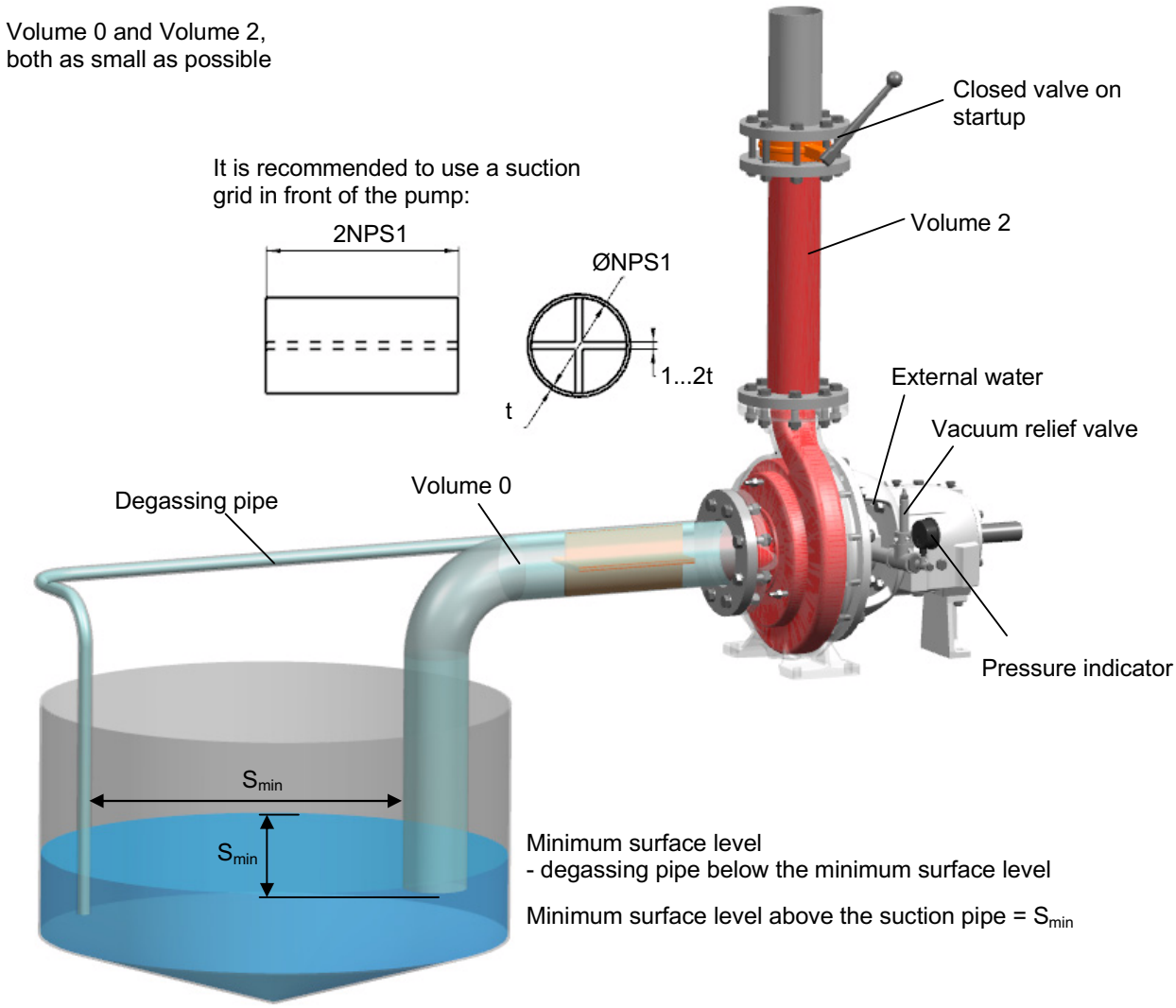


Minimum surface level above the suction pipe:

$$S_{min} = \max\begin{cases} 5 \text{ x } H_{dyn} \\ 4 \text{ x } NPS1 \end{cases}$$

$$H_{dyn} = \frac{U_s^2}{2 \times g} \text{ ft}$$

$$U_s = \frac{Q}{448.8 \times \pi \text{ x } \left(\frac{NPS1}{24}\right)^2} \qquad , g = 32.174 \frac{ft}{s^2}$$

Q, flow rate in USGPM
NPS1, suction diameter in inches

Fig. 10


COPYRIGHT © SULZER PUMPS FINLAND OY

## Gooseneck start, GP4

Volume 2 = 0,5 *)…1,5**) x Volume 1
Volume 0 = as small as possible

It is recommended to use a suction grid in front of the pump:




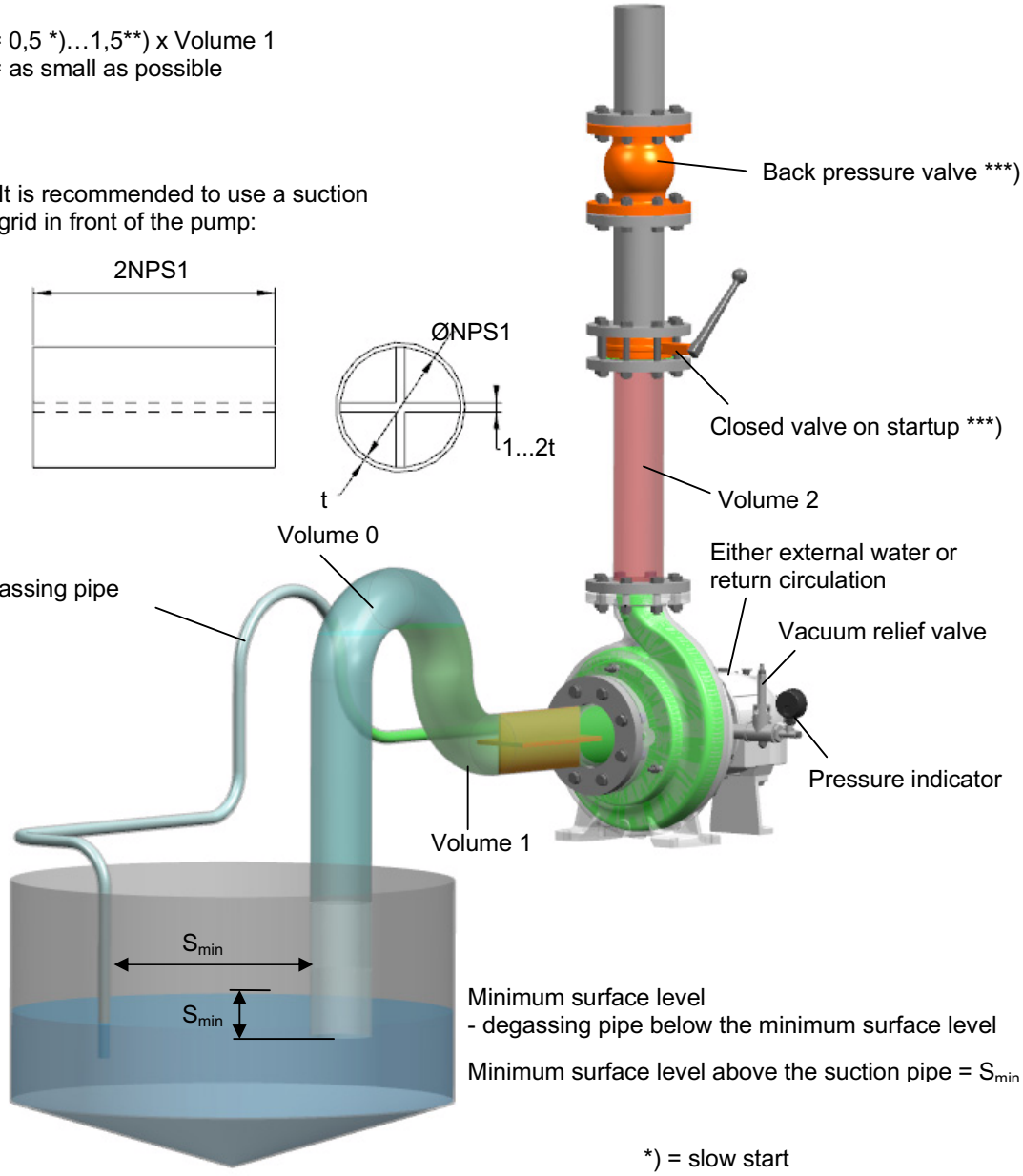


Minimum surface level
- degassing pipe below the minimum surface level

Minimum surface level above the suction pipe = $S_{min}$

*) = slow start

**) = fast start

***) = If the valves need to be placed in the reverse order, they must be as close to each other as possible.

Minimum surface level above the suction pipe:

$$S_{min} = \max\begin{cases} 5 \text{ x } H_{dyn} \\ 4 \text{ x NPS1} \end{cases}$$

$$H_{dyn} = \frac{U_s^2}{2 \times g} \text{ ft}$$

$$U_s = \frac{Q}{448.8 \times \pi \text{ x } \left(\frac{NPS1}{24}\right)^2} \qquad , g = 32.174 \frac{ft}{s^2}$$

Q, flow rate in USGPM
NPS1, suction diameter in inches

Fig. 11


COPYRIGHT © SULZER PUMPS FINLAND OY

# 4 Coupling unit

## 4.1 Installation and alignment of coupling

**WARNING**

Before beginning any installation or alignment procedures, make sure the drive motor cannot be started by any means.

**NOTE**

Satisfactory performance of the coupling depends on correct installation and alignment.

When applicable, the coupling has already been installed and prealigned at the factory. However, the alignment may change due to faulty hoistings, baseplate support, piping support, thermal expansion or the like. Therefore check the shaft alignment of the coupling and re-align during the following stages:

1. After supporting of piping and before starting the pump, tighten the fixing screws of the pump and align the coupling to the required accuracy. Fig. 13.
2. After running the pump with water, look for changes caused by the water run. Correct the changes by altering the supporting of the piping. Tighten the fixing screws of the pump and align the coupling.
3. Carry out hot alignment if the temperature of the pumped liquid is higher than 212°F. The alignment is carried out during production run immediately after the pump is stopped while the pump and the motor are still at the operating temperature. The need for hot alignment depends on the extent of temperature differences and the coupling type chosen.

Alignment is checked by measuring the angular and parallel misalignments in vertical (6 and 12 o'clocks) and horizontal (3 and 9 o'clocks) directions. During the alignment, the coupling halves have to be locked together so that they do not move against each other. If needed, correct the alignment by adding and removing shims from under the feet of the motor and shifting the motor horizontally, until the shafts are aligned within the given tolerances. Fig. 13.

Optional alignment blocks can be used to shift the motor horizontally, see Fig. 12.

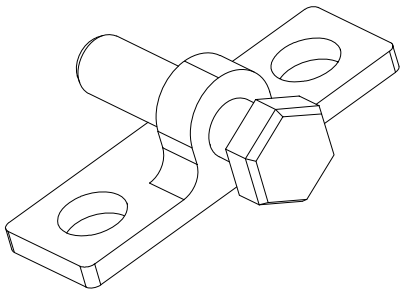

Fig. 12

## 4.2 Maximum tolerances for coupling alignment

The maximum tolerances for angular and parallel alignments are given in Fig. 13.


COPYRIGHT © SULZER PUMPS FINLAND OY

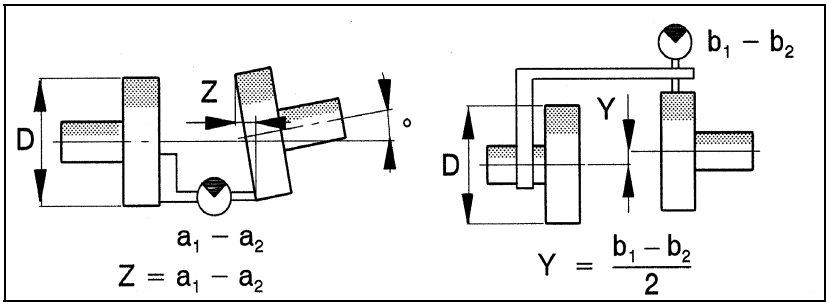


| D (in) | Z max | | | | Y max | |
|---|---|---|---|---|---|---|
| | ≤1500 rpm | | >1500 rpm | | ≤1500 rpm | >1500 rpm |
| | in | ° | in | ° | in | in |
| - 4 | 0.003 | 0.06 | 0.002 | 0.04 | 0.004 | 0.003 |
| > 4 - 8 | 0.004 | 0.05 | 0.003 | 0.03 | 0.006 | 0.004 |
| > 8 -120 | 0.006 | 0.03 | 0.004 | 0.02 | 0.008 | 0.006 |
| > 12 - 16 | 0.008 | 0.03 | 0.004 | 0.02 | 0.010 | 0.008 |

Fig. 13

# 5 Baseplate

## 5.1 Installation at the site

| NOTE |
|---|
| If the ordered assembly contains an API and Heavy Duty baseplate, follow the enclosed installation at the site instruction N31664. |

| NOTE |
|---|
| When welding the foundation screws, connect the earth clamp to the baseplate, never to the pump! |

The pump base must be sturdy enough to endure vibration, stress and potential forces caused by the piping.

The pump base is normally reinforced by making a concrete support stand or equivalent. Also note the bottom beams in the foundation or cavities for the different types of foundation screws.

## 5.2 Grouted baseplate of steel

### Installation using welded foundation screws

The bottom beams in the foundation are cast in advance according to the dimensional drawing of the pump. The strength requirements for the bottom beams are given in Table 3. In order to facilitate the alignment of the beams, a so-called concrete frame can be used. The recommended accuracy for the installation of the beams is ±4 inch in all directions. The actual installation becomes much easier, if the upper surfaces are horizontal.


COPYRIGHT © SULZER PUMPS FINLAND OY

Place foundation screws (918.61) in the fixing holes of the baseplate. The distance between the foundation and the lower edge of the baseplate must be at least 2 inch. Each foundation screw is fixed to the baseplate by means of hexagonal nuts (2 pcs/foundation screw). Fig. 14.

Lower the pre-installed pump-motor-baseplate-assembly onto the floor so that the foundation screws are above the beams and the pump is in its position in the lateral and longitudinal direction. Now the foundation screws can be welded to the beams.

Adjust the position of the baseplate before grouting by turning the hexagonal nuts of the foundation screws, until the assembly lies horizontally and at the correct height.

**Table 3, Welded foundation screw**

| Foundation screw | The capacity of the bottom beam (min.) | | e.g. I-beam H x B x L |
|---|---|---|---|
| | Fv tension lbf | Fh sheat lbf | min. dimensions (in) |
| 5/8 -11 x 6 | 1900 | 1700 | 4 x 4 x 4 |
| 3/4 -10 x 6 | 3900 | 3250 | 4 x 4 x 6 |
| 1 - 8 x 8 | 6300 | 5250 | 5 x 5 x 8 |
| 1 1/4 -7 x 8 | 8775 | 7250 | 6 x 6 x 10 |

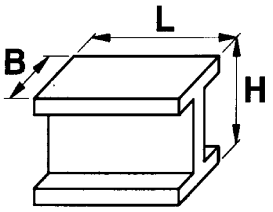


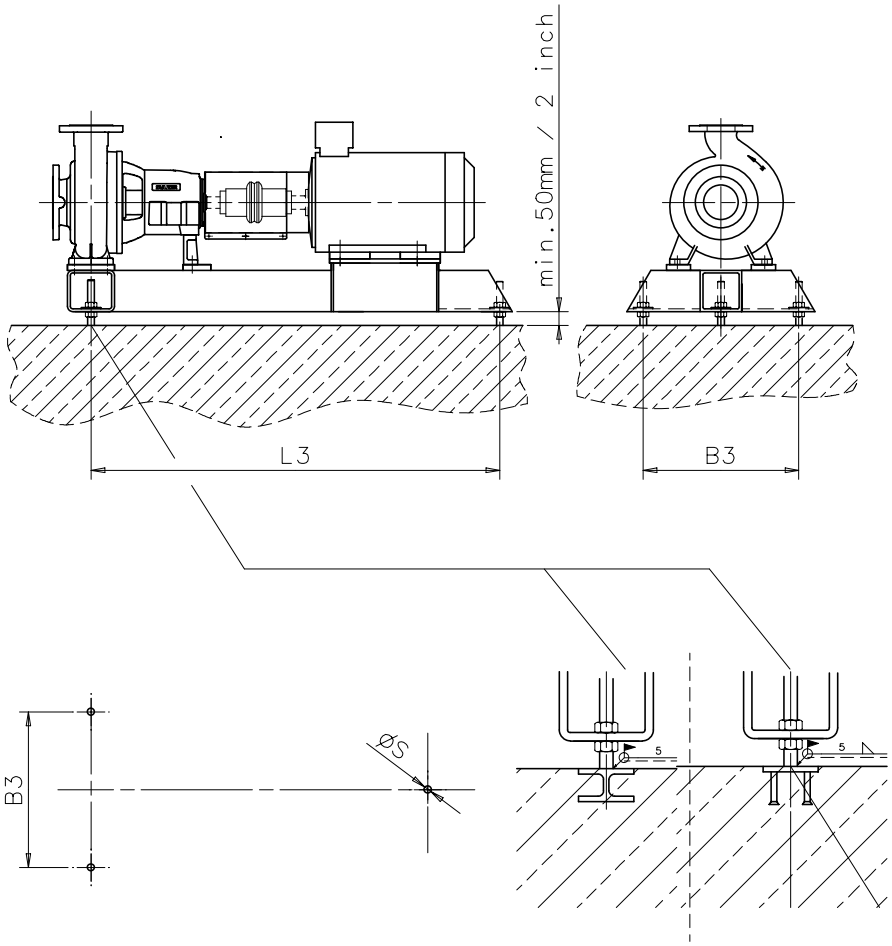


Fig. 14, Baseplate for pump and motor (SLP)


COPYRIGHT © SULZER PUMPS FINLAND OY

## Installation using grouted foundation screws

The foundation screw cavities are made in advance (by pouring of concrete, drilling) in the concrete frame according to the dimensional drawing of the pump, Table 4 and Fig. 15. The recommended accuracy for the location of the cavities is ±0.4 inch.

Place the foundation screws (918.61) in the fixing holes of the baseplate, taking into account the distance between the foundation and the lower edge of the baseplate which must be at least 2 inch and the minimum dimension U2 according to Table 4. Each foundation screw is fixed to the baseplate by means of hexagonal nuts (2 pcs/foundation screw).

Lift the pre-installed pump and baseplate onto the mounting blocks so that the distance between the foundation and the lower edge of the baseplate is at least 2 inch and so that the foundation screws fit into their cavities and the pump is in its position in the lateral and longitudinal directions.

Grout the foundation screws. Use only non-shrinking solder concrete of high quality. Allow the concrete to set for about 1 or 2 days.

Remove the mounting blocks and adjust the position of the baseplate by turning the hexagonal nuts until the assembly lies horizontally and at the correct height.

**Table 4, Grouted foundation screws**

| **Size** | Foundation screw (in) | | |
|---|---|---|---|
| | **~e** | **$U_{min}$** | **$U2_{min}$** |
| 5/8 -11 x 11 | 4 | 8 | 6.25 |
| 3/4 -10 x 14 | 5 | 10 | 8 |
| 1 -8 x 16 | 5 | 12 | 9.5 |
| 1 1/4 -7 x 19 | 6.25 | 15.75 | 12 |


COPYRIGHT © SULZER PUMPS FINLAND OY

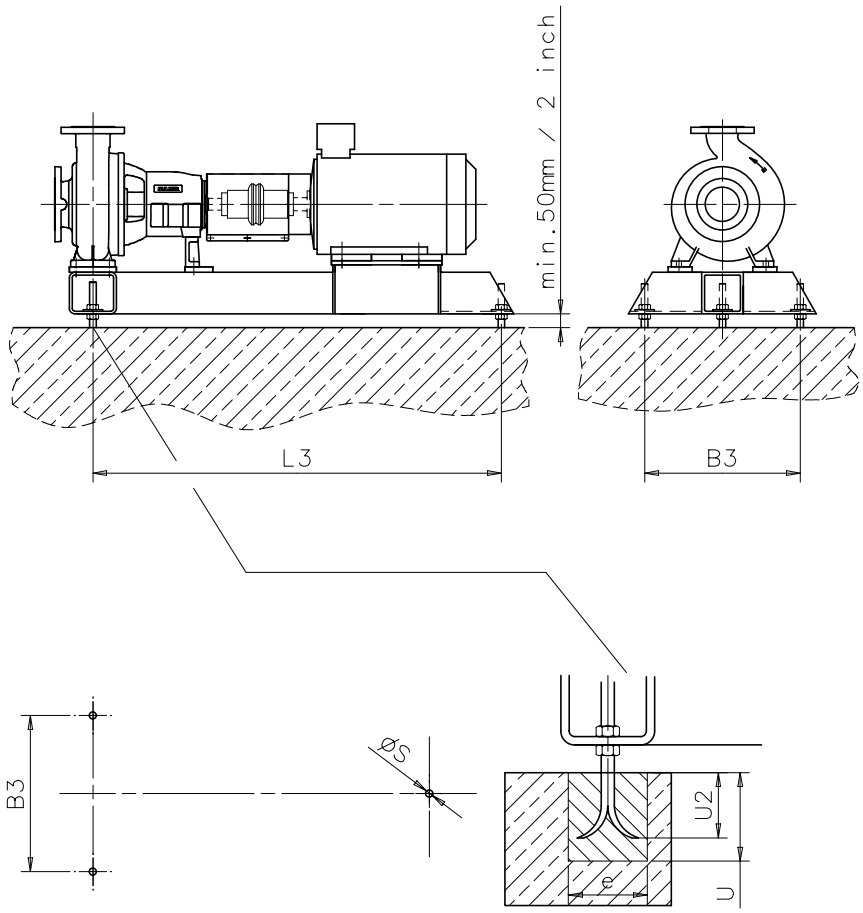


Fig. 15, Baseplate for pump and motor (SLP)

## Foundation

The recommended dimensioning for the foundation is given in Fig. 16. The dimensions for the baseplate are given in the dimensional drawing Baseplate for pump and motor.

The suitable concrete reinforcement is recommended because of the concrete shrinkage and the loads of the foundation. The amount of the concrete reinforcement depends on the size and the loads of the foundation and must be carefully calculated by the local civil engineer according to local standards and regulations.

Pour concrete into the mold. The recommended strength grade for the concrete is about 5000 psi (design strength K 35).

The upper surface of the foundation is leveled so that it is slanting in accordance with Fig. 16. Water the grouting during its drying to prevent cracking.

Recheck the alignment of the coupling after the grouting according to section ”Installation and alignment of coupling”.


COPYRIGHT © SULZER PUMPS FINLAND OY

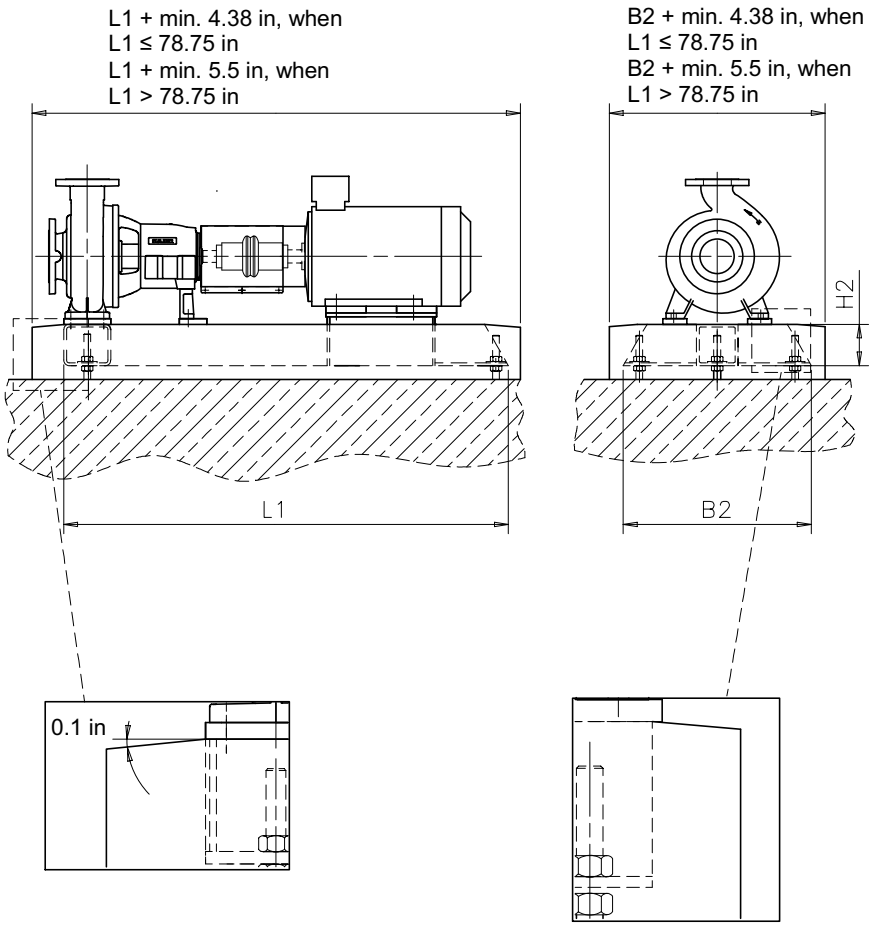


Fig. 16, Baseplate for pump and motor (SLP)

# 6 Drive motor

## 6.1 Installation of the motor on the baseplate

If the motor has not been installed on the baseplate by the pump manufacturer, the installation should be carried out as follows:

The coupling half on the motor side is warmed up to approx. 212 °F and pushed onto the motor shaft in such a way that the space between the ends of the shafts is according to the dimensional drawing (usually the front face of the coupling is even with the end of the shaft).

When installing the coupling, also see instructions supplied by the coupling manufacturer.

The coupling spacer is fastened to the coupling half of the motor without the flexible element.

Check that the pump is aligned as accurately as possible to the middle of the fixing holes of the motor. Lift the motor onto the riser blocks on the baseplate.

The coupling is aligned according to Section ”Installation and alignment of couplings”. The alignment is carried out by moving the motor vertically by means of the riser blocks or shims which are placed under the feet of the motor and laterally by moving the motor and the riser blocks sideways. Please note that there is an additional lateral adjustment allowance of 0.12 inch in the holes of the screws in the riser block.


COPYRIGHT © SULZER PUMPS FINLAND OY

When installing the motor, special attention should be paid to the clearance of the coupling spacer, so that the spacer can be removed without detaching the motor.


COPYRIGHT © SULZER PUMPS FINLAND OY

SULZER

SPP id: Version 14 > / 170201 / Replaces 120601 / en / **N31795** / 2

# AHLSTAR

## PROCESS PUMPS

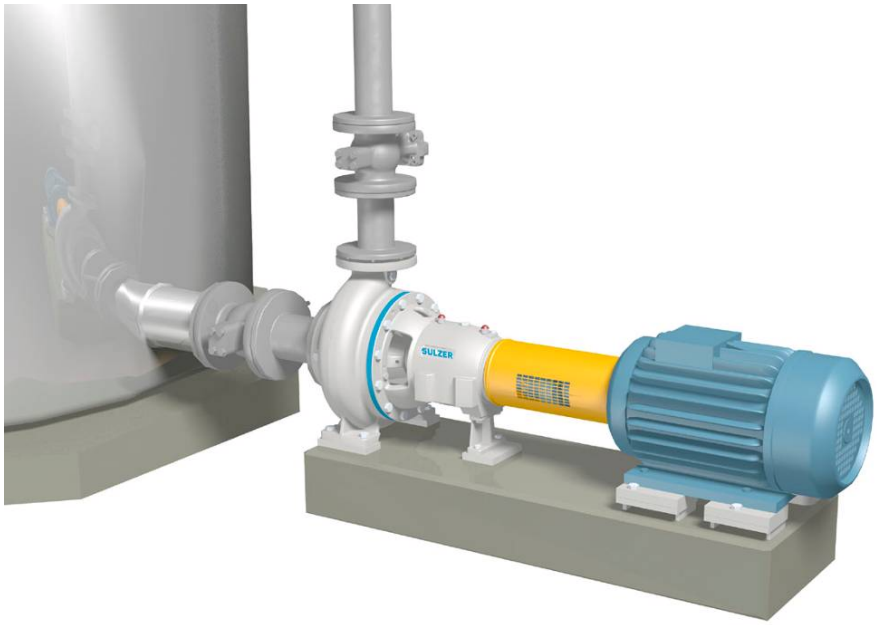


**Operation**


1 Safety procedures before start-up
2 Starting the pump
3 Controls during the first run
4 Shut-down procedure
5 Controls after the first run
6 Trouble-shooting - operation



COPYRIGHT © SULZER PUMPS FINLAND OY

# 1 Safety procedures before start-up

Before starting the pump for the first time and after service repairs, the following precautionary measures are always to be checked carefully to prevent any accidents and to guarantee a trouble-free operation of the pump.

**WARNING**

Make sure that the motor cannot be started by any means accidentally during the following procedures.

**WARNING**

Make sure that the fixing screws of the pump and the motor are tightened according to the instructions.

**WARNING**

During operation - leakage of hazardous substances can occur - prepare proper means for a safe waste removal.

**NOTE**

Pressure containing pump parts are not pressure vessels within the meaning of the regulations for pressure vessels.

**CAUTION**

The pump will be damaged if run in the wrong direction.

## 1.1 Wet end

### Leakage test

The pump parts and the piping shall be able to withstand a leakage test before the start-up. Leakage, particularly in the suction piping, can seriously reduce the performance of the pump and make it impossible to prime the pump before the start-up.

## 1.2 Sealing unit

### Shaft seal and sealing water

Depending on the shaft seal fitting used, make sure that the shaft seal piping has been mounted correctly and that the sealing liquid pressures, liquid volumes and service intervals correspond to the table below.


COPYRIGHT © SULZER PUMPS FINLAND OY

**Table 1, Sealing unit types (dynamical seal, mechanical seal, gland packing)**

| Sealing unit type | Shaft seal fluid | | | | | |
|---|---|---|---|---|---|---|
| | N | FR | FE | QF | BF | G |
| DS13 | X | | X | | | |
| DS14 | X | | X | | | |
| MS33 | X | | | X | | |
| MS34 | | X | X | | | |
| MS42 | | | | X | X | |
| MS71 | X | | | X | | X |
| MS72 | | X | X | | | |
| MS81 | | | | X | X | |
| MS91 | X | | | | | |
| PG11 | X | X | X | | X | |
| Do not use a dynamic seal or gland packing in potentially explosive atmospheres (ATEX). | | | | | | |

**Table 2, Sealing unit types (liquid ring pump, air separating pump)**

| Sealing unit type | Shaft seal fluid | | | | | |
|---|---|---|---|---|---|---|
| | FR | FE | QFFR | BFFR | QFFE | BFFE |
| SM11 | X | | | | | |
| SM11 | | X (* | | | | |
| SM21 | | | X | | | |
| SM21 | | | | X | | |
| SM21 | | | | | X (* | |
| SM21 | | | | | | X (* |
| RM11 | | X (* | | | | |
| Use in potentially explosive atmospheres is permitted on a case-by-case basis. Make sure that the signs and plates fastened on the device and auxiliary equipment indicate the required information. | | | | | | |

N = No sealing liquid

FR = Internal circulation

FE = External flushing liquid; $P_T$ + 7 psi, 0.8 USGPM
*) For high vacuum level external flushing must be doubled or tripled.

BF = Pressurized external flowing sealing liquid; $P_T$ + 7 psi (minimum), 0.8 USGPM
Except with the seal pot sealing water equipment, the needed sealant fluid flow is generated by the pumping effect of the shaft seal. The sealant fluid can be water ($T_{amb}$>32ºF) or a suitable water glycol mixture ($T_{amb}$< 32ºF) or some other liquid depending on the process application. Sealing fluid $T_{max}$ = 212ºF, $P_{max}$ = 0.23 psi.

QF = Non-pressurized (max 7 psi), 0.8 USGPM

G = Grease once a week. Grease must be suitable for the elastomers of mechanical seal.

QFFR = Quench sealing fluid, Recirculation flushing fluid

BFFR = Barrier sealing fluid, Recirculation flushing fluid

QFFE = Quench sealing fluid, External flushing fluid; $P_T$ + 7 psi, 0.8 USGPM
*) For high vacuum level external flushing must be doubled or tripled.

BFFE = Barrier sealing fluid, External flushing fluid; $P_T$ + 7 psi, 0.8 USGPM
*) For high vacuum level external flushing must be doubled or tripled.


COPYRIGHT © SULZER PUMPS FINLAND OY

**Impellers with balancing holes**

$p_T = p_0 - 0.725$ psi

Where $p_T$ = pressure behind the impeller (psi)
$p_0$ = inlet pressure (psi)

Atmospheric pressure used as reference pressure = 0 psi

**Impellers without balancing holes**

$$p_T = p_0 + 151.48 \times 10^{-6} \varrho g H - 240.26 \times 10^{-9} \varrho n^2 \left[ (d_2/2)^2 - (d_b/2)^2 \right] - k \times 961.10 \times 10^{-9} \varrho n^2 \left[ (d_b/2)^2 - (d_5/2)^2 \right] \text{psi}$$

Where $p_T$ = pressure behind the impeller (psi)
$p_0$ = inlet pressure (psi)
$\rho$ = density of the liquid being pumped (lb/ft$^3$)
H = pump head at the operating point in question (ft)
n = rotating speed of the pump (rpm)
$d_2$ = impeller back plate diameter (ft)
$d_b$ = impeller back vane diameter (ft)
$d_5$ = impeller hub diameter is 0.13 ft in bearing unit no. 1,
in bearing unit no. 2 0.16 ft, in bearing unit no. 3 0,20 ft,
in bearing unit no. 4 023 ft, in bearing unit no. 5 0.30 ft and
in bearing unit no. 6 0.33 ft.

Atmospheric pressure used as reference pressure = 0 psi

The flushing liquid and sealing liquid must fulfill the following quality requirements:

- maximum particle size 0.002 in
- maximum solid material content 0.00027lb/in$^3$.

## 1.3 Bearing unit

### Lubrication

**WARNING**

A pump unit operating without proper lubrication will damage the bearings and cause a pump seizure. Use grease lubrication always when the pump is mounted in an inclined position.

Check the oil or grease used for the lubrication of both the pump and motor bearings before start-up. Condensation or ingress of dirt and water may occur if the pump unit is stored for a long time before installation and start-up.


COPYRIGHT © SULZER PUMPS FINLAND OY

## 1.4 Drive motor

### Direction of rotation

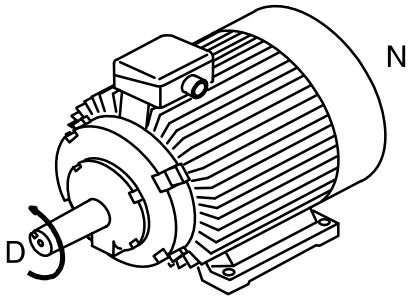


Fig. 1

- Before commissioning, always check the motor for correct rotation.
- It is imperative to detach the coupling spacer before checking the rotation direction of the motor.

The motor rotation must be counter-clockwise when viewed from the coupling end (D-end, Fig. 1) of the motor. (The pump rotation is clockwise when viewed from the coupling end.)

The direction of rotation must correspond to the arrow sign (972.31) on the bearing housing (330.31).

## 1.5 Coupling unit

### Free rotation

Rotate the coupling by hand with the coupling spacer detached.

### Coupling alignment

Check that the coupling has been properly aligned according to the instructions in Section ”Installation and alignment of coupling”.

**W A R N I N G**

Before starting - all safety devices (e.g. coupling guards) must always be correctly installed. For explosive areas, guards with non-sparking materials are to be used.

## 1.6 Baseplate

Vibration of the baseplate should be monitored by means of regular measurements, especially if the baseplate is equipped with mechanical feet. If the vibration values exceed the highest permissible values, the cause of vibration should be determined.


COPYRIGHT © SULZER PUMPS FINLAND OY

# 2 Starting the pump

**WARNING**

The product is meant only for the purpose for which it is sold - never operate beyond the intended use described in these instructions.

**WARNING**

If your pump has no liquid ring (-S) or air separating (-R) pump in the sealing unit, make sure that the pump is sufficiently filled with the pumped liquid before starting.

**CAUTION**

Observe immediately after start-up the instrumentation showing the discharge pressure. If the pressure is not quickly reached, stop the motor and check causes for the low pressure.

**CAUTION**

If it is necessary to adjust the amount of pumped liquid, do it by adjusting the discharge valve. Never use the suction valve for flow adjustment.

## 2.1 Pumps equipped with gland packings, mechanical seals or dynamic sealing units

- Open the valves for sealing water if any, and adjust suitable pressure and flow according to Table 1.
- Check that there is abundant leakage at the gland packing. If there is no continuous leakage, slacken the stuffing box gland. If this does not help, remove the packings and re-pack the stuffing box less tight.
- Fill the pump so that at least the suction pipe and pump casing are filled with liquid. Let the air come out of the upper part of the tangential volute casing by opening the screwed plug (903.13) in connection (C54.11).
- Check that the suction valve is fully open and discharge valve closed.
- Start the motor.
- Open the discharge valve gradually until the desired amount of liquid is reached.
- Check that the gland packing leakage is still abundant. If not, slacken the stuffing box gland immediately. If this does not help and the gland packing becomes hot, stop the pump and find out the reason for the disturbance. When the gland packing has been operating trouble-free for 10 minutes it may be tightened. Tighten it by turning the hexagonal nuts approx. 1/6 turns at a time at 5 - 10 minutes' intervals until the leakage is at least 30 - 80 drops a minute. While tightening, make sure that the stuffing box gland remains perpendicular to the shaft.
- Follow the instructions given by the manufacturer of the sealing water equipment for filling, bleeding and operation setup.


COPYRIGHT © SULZER PUMPS FINLAND OY

## 2.2 Pumps equipped with liquid ring pumps (-S)

- Open the sealing liquid and/or flushing liquid valves and adjust the pressure and the flow rate to a suitable level in accordance with Table 2.
- Let the flushing liquid flow for about 1 to 2 minutes so that all necessary spaces are filled with the liquid.
- Make sure that the suction valve is fully open and that the discharge valve is closed.
- Start the motor.
- Adjust the desired vacuum by means of the vacuum relief valve (Fig. 2):

  Undo the locking nut (6) which locks the valve spindle (2).

  Turn the valve bushing (3) to the desired direction while holding the valve spindle (2) in place. When you turn the bushing (3) clockwise, the vacuum grows as the force of the spring (4) closing the valve spindle (2) increases. When you turn the bushing (3) counterclockwise, the vacuum reduces as the force of the spring (4) decreases.

  When the desired vacuum is reached, lock the valve spindle (2) to the bushing (3) with the locking nut (6).

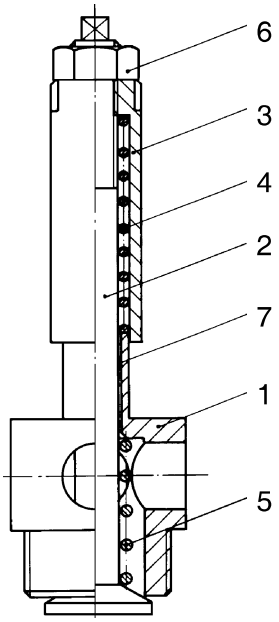


Fig. 2

| CAUTION |
|---|
| There is a risk of destroying the suction impeller of a liquid ring pump by cavitation, if the vacuum level has been adjusted too high or the vacuum relief valve has been taken off and the connection has been plugged. |

- When the pump starts to pump and the pressure on the discharge side rises, open the discharge valve until the desired liquid volume is reached. If the pump and suction pipe are full of liquid, the pressure will rise immediately after starting. If the pump is empty when being started, it takes some time for the pressure to rise.


COPYRIGHT © SULZER PUMPS FINLAND OY

## 2.3 Pumps equipped with air separating pumps (-R)

- Open the sealing liquid valves of the pump and of the potential degassing pump and adjust the flow rate to a suitable level in accordance with Table 2.
- Make sure that the suction valve is fully open and that the discharge valve is closed.
- Start the motor of the degassing pump if there is one.
- Adjust the desired vacuum by means of the vacuum relief valve (see pumps equipped with liquid ring pumps).
- Start the motor.
- Open the degassing valve between the pump and the potential degassing pump.
- Open the discharge valve carefully until the desired liquid volume is reached.
- If the pump is used as a self-priming pump, do not open the discharge valve until the degassing pump has sucked the pump full of liquid, the pump starts to pump and the pressure starts to rise on the discharge side.
- Make sure that the pumped liquid does not flow out through the degassing connection. If it does, reduce the vacuum created by the degassing pump by means of a potential vacuum relief valve. The sealing liquid may flow out through the degassing connection.

# 3 Controls during the first run

**WARNING**

Personal injuries may occur if personal protective equipment is not used when servicing the product. When pumping hazardous liquids, skin and eye protection are required.

**CAUTION**

Do not operate the pump below the minimum recommended flow or with the discharge valve closed. Cavitation or recirculation can lead to a quick pump failure.

By controlling the pump operation and output regularly, the possible need for service and repair can be anticipated. In this way, the pump efficiency is kept high, the process is trouble-free and the maintenance costs are low.

Control the temperature of the gland packing and maintain the leakage at 30 - 80 drops/minute by adjusting the stuffing box gland.

The flow and pressure of sealing water must be kept at the enclosed values given by the seal manufacturer.

When the seal pot sealing water equipment is operating, check that the sealing fluid is flowing in the correct direction – the return hose must be warm.

Check the temperature and vibration of bearings through regular measuring. If one or the other increases, it may be a sign of incorrect lubrication or bearing damage. The measuring studs (SPM, M8 x 24) are in the bearing housing for controlling the bearings.

Also, any noises from the pump and its vibration have to be controlled and the reasons for unusual noises or vibration detected.

The condition of the coupling can be monitored with a stroboscope through the perforation in the coupling guard.


COPYRIGHT © SULZER PUMPS FINLAND OY

# 4 Shut-down procedure

- Close the discharge valve to prevent the pumped liquid from flowing back.
- Close the degassing valve between the pump equipped with air separating pumps (-R) and the potential degassing pump.
- Stop the motor.
- Stop the motor of a potential degassing pump.
- Close the suction valve if there is reason to doubt that the pumped liquid will flow out of the suction piping.
- Close the cooling and flushing liquid valves, if any.
- If the pump has a sealing liquid valve, it cannot be closed until the pump has been drained or until at least the pressure has been relieved from the pump.

During longer shut-downs, the pump must be checked every now and then. Turn the shaft manually a few times. If the pumped liquid congeals or solidifies easily, if it is corrosive, or if the pump is exposed to freezing, drain the pump and suction piping for the shut-down period. At the same time, flush the pump with clean water.

# 5 Controls after the first run

| N O T E |
|---|
| The correct final alignment of the coupling is important for the pump operation. |

When the pump unit has run for a sufficient length of time to bring the pump and motor up to the normal operating temperature, check the coupling alignment according to Section ”Installation and alignment of coupling”.

With hot liquid pumps, check the tightness of the casing cover fixing screws. Adjust torque in accordance with the reference values.

With pumps equipped with gland packing, check proper leakage from the stuffing box.

With pumps equipped with mechanical seals, ensure that the flushing or cooling supplies are functioning adequately.

Make sure that the sealing water system is working properly.

Check that there is no overheating in the pump or motor bearings.

# 6 Trouble-shooting - operation

During the start-up period, problems are mostly caused by pump selection mistakes, poor process design, operational mistakes or foreign objects in the process.

During the long-term operation of a pump unit, problems are mostly caused by random failures, process changes or corrosion and wear.

Problems can normally be traced to either poor maintenance or exceeding the limitations for the intended use of the pump.


COPYRIGHT © SULZER PUMPS FINLAND OY

The following problem tracing analysis includes the most common malfunctions and their possible causes. If the pump does not function properly, it is important to trace the actual reasons, so that the repairs and required modifications can be done without delay. Table 3 - Table 10.

**Table 3, Symptom: Pump not delivering liquid**

| Probable cause: | Remedy: |
|---|---|
| Wrong direction of rotation | Change the direction of rotation acc. to the arrow sign on the bearing unit |
| Pump not adequately primed or a vapor lock in the suction pipe | Reprime the pump and suction piping |
| Flushing liquid is not on (liquid ring pumps (-S)) | Open the flushing liquid valve |
| Difference between inlet pressure and vapor pressure too small | Check the suction piping arrangements |
| Air leakage in suction opening, suction piping or shaft seal | Check the suction piping. Readjust the shaft seal |
| Suction piping, suction valve or impeller clogged | Check the suction piping and the pump for any obstructions |
| Rotational speed too low | Check the speed requirements/limitations |
| Flow resistance of the piping higher than the head generated by the pump | Check resistancies and reduce losses |
| Unexpected air/gas content in the pumped liquid | Consult manufacturer for further instructions |
| Suction tank level low | Check the required inlet/suction head |

**Table 4, Symptom: Insufficient head**

| Probable cause: | Remedy: |
|---|---|
| Unexpected air/gas content in the pumped liquid | Consult manufacturer for further instructions |
| Unexpected viscosity of the pumped liquid | Consult manufacturer for further instructions |
| Suction piping, suction valve or impeller clogged | Check the suction piping and the pump for any obstructions |
| Rotational speed too low | Check the speed requirements/limitations |
| Wrong direction of rotation | Change the direction of rotation acc. to the arrow sign on the bearing unit |
| Flow resistance of the piping higher than the head generated by the pump | Check resistancies and reduce losses |
| Pressure containing pump parts worn/damaged/clogged | Check the pump and replace defective parts, if necessary |
| Suction tank level low | Check the required inlet/suction head |

**Table 5, Symptom: Insufficient (or irregular) flow**

| Probable cause: | Remedy: |
|---|---|
| Vapor lock in the suction pipe | Reprime the pump and suction piping |
| Suction head too high | Check that the suction valve is fully open and that the suction line is unobstructed |
| Difference between inlet pressure and vapor pressure too small | Check the suction piping arrangements |
| Air leakage in suction opening, suction piping or shaft seal | Check the suction piping and readjust the shaft seal |
| Unexpected air/gas content in the pumped liquid | Consult manufacturer for further instructions |
| Unexpected viscosity of the pumped liquid | Consult manufacturer for further instructions |
| Suction piping, suction valve or impeller partially clogged | Check the suction piping and the pump for any obstructions |
| Rotational speed too low | Check the speed requirements/limitations |
| Flow resistance of the piping higher than the head generated by the pump | Check resistancies and reduce losses |
| Pressure containing pump parts worn/damaged/clogged | Check the pump and replace defective parts, if necessary |

**Table 6, Symptom: High power consumption**

| Probable cause: | Remedy: |
|---|---|
| Rotational speed too high | Check the speed requirements/limitations |
| Wrong direction of rotation | Change the direction of rotation acc.to the arrow sign on the |


COPYRIGHT © SULZER PUMPS FINLAND OY

| Probable cause: | Remedy: |
|---|---|
| | bearing unit |
| Flow resistance of the piping much higher/lower than the head generated by the pump | Check the piping arrangements |
| Unexpected specific gravity of the pumped liquid | Consult manufacturer for further instructions |
| Unexpected viscosity of the pumped liquid | Consult manufacturer for further instructions |
| Pump and motor incorrectly aligned | Realign the pump and motor assembly, make sure there is no strain on the pump. |
| Crooked or eccentric shaft | Reassemble the pump and renew the shaft and bearings, if necessary |
| Rotating objects or pump parts chafing inside the pump | Reassemble the pump and check the clearances |
| Pressure containing pump parts worn/damaged/clogged | Check the pump and replace defective parts, if necessary |
| Mechanical tightness of pump components | Reassemble the pump and check the clearances |

### Table 7, Symptom: Excessive noise and/or vibration

| Probable cause: | Remedy: |
|---|---|
| Difference between inlet pressure and vapor pressure too small (cavitation) | Check the suction piping arrangements |
| Unexpected air/gas content in the pumped liquid | Consult manufacturer for further instructions |
| Air leakage in suction opening, suction piping or shaft seal | Check the suction piping/readjust the shaft seal |
| Suction piping, suction valve or impeller clogged | Check the suction piping and the pump for any obstructions |
| Rotational speed too low | Check the speed requirements/limitations |
| Flow resistance of the piping higher than the head generated by the pump | Check resistancies and reduce losses |
| Pump functioning below the recommended minimum flow (cavitation) | Check the pumping system requirements |
| Pump foundation not rigid enough | Strengthen the foundation |
| Inadequate piping support exerting strain on the pump | Check the piping support requirements |
| Pump and motor incorrectly aligned | Realign the assembly, make sure there is no strain on the pump. |
| Crooked or eccentric shaft | Reassemble the pump and renew the shaft and bearings, if necessary |
| Rotating objects or pump parts chafing inside the pump | Reassemble the pump and check the clearances |
| Pressure containing pump parts worn/damaged/clogged | Check the pump and replace defective parts, if necessary |
| Mechanical tightness of pump components | Reassemble the pump and check the clearances |
| Bearings worn or loose | Reassemble the pump and replace the bearings, if necessary |
| Inadequate or excessive lubrication | Check the pump for proper lubrication |
| Impeller damaged or out of balance | Reassemble the pump and replace the impeller, if necessary |

### Table 8, Symptom: Bearings wear rapidly

| Probable cause: | Remedy: |
|---|---|
| Pump and motor incorrectly aligned | Realign the pump assembly, make sure there is no strain on the pump. Replace the bearings, if necessary. |
| Crooked or eccentric shaft | Reassemble the pump and straighten or replace the shaft |
| Rotating objects or pump parts chafing inside the pump | Reassemble the pump and check the clearances |
| Impeller damaged or out of balance | Reassemble the pump and replace the impeller, if necessary |
| Inadequate or excessive lubrication | Check the pump for proper lubrication |
| Badly installed and/or dirty bearings | Renew bearings, if necessary. Check the quality and amount of lubricant |

### Table 9, Symptom: Pump overheats/seizes

| Probable cause: | Remedy: |
|---|---|
| Pump not adequately primed | Reprime the pump and suction piping |


COPYRIGHT © SULZER PUMPS FINLAND OY

| Probable cause: | Remedy: |
|---|---|
| Flushing liquid is not on (liquid ring pumps (-S)) | Open the flushing liquid valve. |
| Difference between inlet pressure and vapor pressure too small | Check the suction piping arrangements. The pump may operate below the recommended minimum flow (cavitation) |
| Pump functioning below the recommended minimum flow (cavitation) | Check the pumping system requirements |
| Pump and motor incorrectly aligned | Realign the assembly, make sure there is no strain on the pump |
| Bearings worn | Reassemble the pump and replace the bearings, if necessary |
| Crooked or eccentric shaft | Reassemble the pump, straighten or renew the shaft |
| Impeller damaged or out of balance | Reassemble the pump and replace the impeller, if necessary |
| Rotating objects or pump parts chafing inside the pump | Reassemble the pump and check the clearances |
| Discharge valve closed | Open the discharge valve |
| Discharge valve clogged | Check the pipe and flush it if necessary |

**Table 10, The liquid pumped flows out through the degassing connection (air separating pumps (-R))**

| Probable cause: | Remedy: |
|---|---|
| Inlet height too high | Check the suction height limits |
| Pump speed too small | Check the speed requirements and restrictions |
| Degassing vacuum too high | Adjust the degassing vacuum by means of the vacuum relief valve |


COPYRIGHT © SULZER PUMPS FINLAND OY

SULZER

SPP id: Version 14 > / 170201 / Replaces 141101 / en / **N31796** / 3

# AHLSTAR

## PROCESS PUMPS

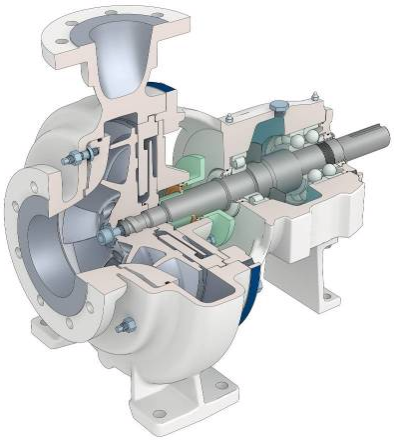

**Preventive maintenance**


1 General
2 Wet end
3 Sealing unit
4 Bearing unit



COPYRIGHT © SULZER PUMPS FINLAND OY

# 1 General

| NOTE |
|---|
| Refer to the sectional drawings when reading through these instructions. |

| NOTE |
|---|
| Preventive maintenance is also a relevant safety factor. |

| NOTE |
|---|
| If the pump performance does not fulfill the process requirements, the pump is to be disassembled and inspected. All worn parts should be changed to new genuine spare parts. |

Regular and systematic preventive and predictive maintenance can extend the product lifetime and requires fewer repairs and spare parts. Monitoring of instrumentation and physical examinations are a vital part of today's quality maintenance. We recommend that the maintenance system includes a historical record kept for each pump, its condition and performance. This will help to prevent sudden failures and aid in case of possible fault tracing analyses. In the process industries, one process downtime caused by a pump normally costs much more than the price of the pump.

Preventive maintenance consists of the following actions:

- Bearing lubrication
- Temperature, noise, vibration monitoring and inspections
- Monitoring the discharge pressure, capacity and power demand
- Inspections regarding corrosion and wear
- Shaft seal monitoring
- Regular pump washdowns
- Monitoring the pump and pipings for leakage
- Quarterly checks of the tightness of critical fasteners, such as foundation screws and pump & motor fasteners onto the baseplate

General measuring instruments for pump operation are presented in Table 1.

**Table 1, Measuring instruments**

| Fixed instruments: | Portable instruments: |
|---|---|
| Pressure gauges & indicators | Vibration analysers |
| Flow meters | Tachometers |
| Ammeters / wattmeters / voltmeters | Thermometers |
| Speed indicators | Noise level indicators |
| Temperature detectors | Ultrasonic indicators (wall thickness) |
| Vibroswitches | |
| Any fixed or portable instruments may in themselves create a possible failure and require regular monitoring to ensure their correct functioning. | |


COPYRIGHT © SULZER PUMPS FINLAND OY

**WARNING**

In an explosive atmosphere, avoid abrasive cleaning when cleaning the pump to prevent sparking caused by electrostatic charge (explosion hazard group IIC).

## 1.1 Temperatures

During operation, the following surface temperatures are to be observed regularly:

- volute casing (102.11)
- bearing housing (330.31)
- shaft sealing, measured from the casing cover (161.21) or from the stuffing box housing (451.21)
- casing (100.21) measured at both the suction impeller and mechanical seal (liquid ring pumps (-S))
- motor (800.41)

The reasons for any deviations in temperatures are to be checked immediately to prevent further and more serious damage.

## 1.2 Noise and vibration analysis

A regular follow-up of the pump noise and vibration gives a good view regarding the condition and wear of bearings and also other wearing parts of the pump. This enables timely predictive maintenance routines and reduces the potential for unexpected shut-downs. Admissible vibration severity values are presented in Section ”Safety instructions/Balance and vibration”.

## 1.3 Discharge pressure

A regular control of the pressure generated by the pump, the rated flow and the power need of the drive unit gives a good view regarding the condition and wear of the hydraulic parts of the pump. The follow-up enables such preventive maintenance actions as clearance adjustments or parts renewals to be scheduled accordingly.

## 1.4 Pump washdown

The pump is designed to prevent external liquids from entering the bearing unit. However, direct spraying of high-pressure water to the labyrinth rings (423.31 and 423.32) must be avoided.

# 2 Wet end

## 2.1 Corrosion and wear

When the pumps are operating under corrosive and/or abrasive conditions, a regular follow-up of wall thicknesses in the casing and casing cover is necessary. When the wall thickness has worn more than the permitted corrosion allowance of 0.12 inch, the mechanical durability (pressure limits) stated in these instructions is no longer guaranteed.

Due to the casting tolerances (ISO 8062-3: 2007), the nominal wall thicknesses stated in the casting drawings cannot be used for assessing excessive corrosion and wear. If corrosion and wear are expected, the wall thicknesses of the volute case and case cover should be measured at specific points before the first start-up. These values serve later as reference values for assessing excessive corrosion and wear.


COPYRIGHT © SULZER PUMPS FINLAND OY

## 2.2 Adjustment of clearance between sideplate and impeller

If the pump has an adjustable sideplate (135.11), the clearance between the impeller and sideplate is adjusted without disassembling the pump as follows (Fig. 1):

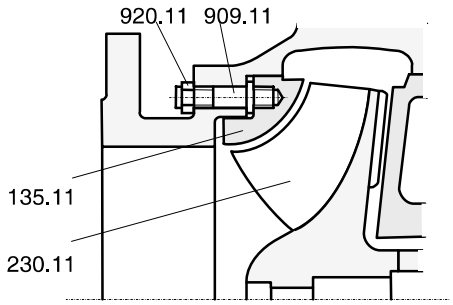


Fig. 1

- Slacken the hexagonal nuts (920.11) of the adjusting screws (909.11).
- If the pump is provided with a vortex impeller, move the sideplate using the adjusting screws so that there is a minimum of stagger between the volute casing and sideplate (pump type: NPT, WPT).
- If your pump is provided with an impeller other than a vortex impeller, turn each adjusting screw alternately counter-clockwise until the sideplate touches the impeller. Then turn the adjusting screws clockwise 1/3 turns to obtain a 0.02 inch clearance between the sideplate and impeller.
- After the adjustment, tighten the hexagonal nuts, whereby the adjusting screws will be locked. The adjusting screw must not turn during tightening.
- By turning the coupling by hand, check that the pump can rotate freely.
- The sideplate can be adjusted altogether 0.12 - 0.16 inch towards the impeller. If further adjustment is needed, change the impeller and sideplate in order to keep the right clearance.

# 3 Sealing unit

**WARNING**

Always stop the motor before any of the following maintenance actions to the pump. Make sure that the motor cannot be started by any means accidentally during the repairs.

**WARNING**

Always drain the pump before disassembling the shaft seal. When pumping hazardous liquids, make sure that there is no trapped liquid remaining in pump parts.

## 3.1 Gland packing

Gland-packed pumps must be checked regularly to ensure that there is a slight leakage from the gland. An excessively tight gland causes wear to the shaft sleeve and increased power demand. Refer to the instructions in Section ”Operation/Controls during the first run”.


COPYRIGHT © SULZER PUMPS FINLAND OY

**WARNING**

Never use gland packing material containing asbestos. It may cause a health hazard.

## Maintenance of shaft seals

- Remove the used gland packing from the stuffing box housing by using a flexible extraction tool (Fig. 2). Clean the stuffing box housing and open any clogged sealing liquid holes.

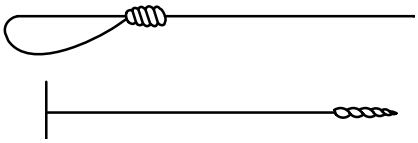

Fig. 2

- If there are scratches or wearing marks on the shaft wearing sleeve (part 524.21 in Table 2) or in the stuffing box housing, replace the damaged parts.
- We recommend the use of precompressed gland packings. However, if you need to cut the packings from a sealing band, proceed as follows: turn four rounds of the sealing band around a wooden pattern having the same thickness as the shaft wearing sleeve (part 524.21 in Table 2) and use a sharp knife to cut the packing rings straight and axially without overdimensioning or underdimensioning, Fig. 3. The dimensions of the stuffing box housing and the total length of the band to be cut without working allowances are given in Table 2.

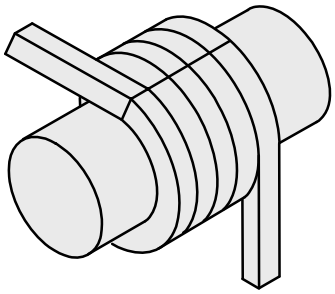

Fig. 3

- When packing new packing rings, be very precise, and keep the parts clean.
- Lubricate the shaft sleeve and packing rings lightly with oil.
- Push the first packing ring tightly against the neck bush. The ends of the rings must be exactly against each other.
- The second ring is placed against the first one so that the joints are at 180° angle to each other, Fig. 4.
- Next put the lantern ring into the seal chamber.
- Fit also the last two rings with the joints at 180° angle to each other.
- After all the packing rings and the lantern ring have been fitted, tighten the nuts of the stuffing box gland by hand.
- The shaft seal is taken into use according to Section ”Operation/Controls during the first run”.


COPYRIGHT © SULZER PUMPS FINLAND OY

**Table 2, Dimensioning of stuffing box**

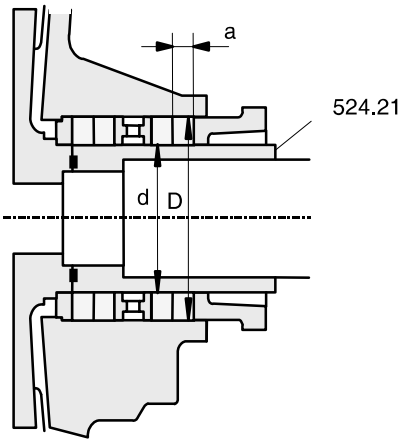


| Shaft size | Stuffing box Ød x ØD x a (in) | Total length of the packing ring (in) |
|---|---|---|
| 1 | 1 5/8 x 2 3/8 x 3/8 | 25 |
| 2 | 2 x 2 3/4 x 3/8 | 31 |
| 3 | 2 3/8 x 3 3/8 x 1/2 | 42 |
| 4 | 2 3/4 x 3 3/4 x 1/2 | 52 |
| 5 | 3 1/2 x 4 3/4 x 5/8 | 67 |
| 6 | 3.937 x 5.198 x 5/8 | 58 |

**Gland packing**

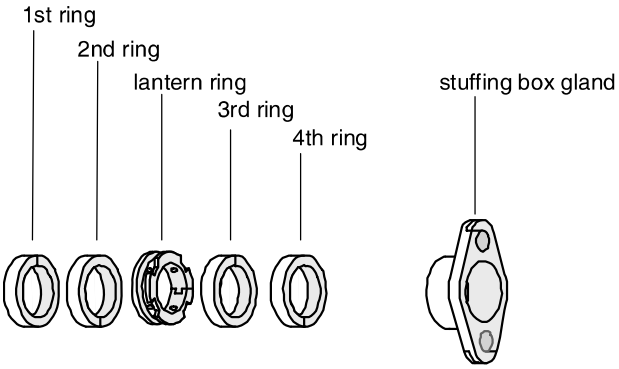


Fig. 4

## 3.2 Mechanical seal

Mechanical seals are normally installed and adjusted at the factory before the delivery. The general principle is that the mechanical seal does not leak at all. The lifetime of a mechanical seal depends on the cleanliness and lubricating properties of the pumped liquid and the sealing liquid. If the mechanical seal leaks, stop the pump and replace the mechanical seal.

**C A U T I O N**

The dry running of mechanical seals will damage the sliding surfaces and cause leakage of pumped liquid.


COPYRIGHT © SULZER PUMPS FINLAND OY

### Maintenance of shaft seals

Mechanical seals do not normally require any preventive maintenance actions during their operation. If any problems occur, the whole seal package is normally renewed.

## 3.3 Dynamic seal

### Dynamic seal, plate type (DS13, DS14)

The expeller (604.21) design of the dynamic seal prevents the leakage of pumped liquid through the stuffing box during operation. During shut-down, the leakage is prevented by the static seal design (435.21).

**Maintenance of shaft seals**

Dynamic seals do not normally require any preventive maintenance actions. During the first years of operation, the static seal (435.21) can yet wear so much that some leakage can occur during stoppages. The static seal is again functional when sliding the thrust ring (475.21) towards the volute casing so long that the leakage stops. The thrust ring must always be secured with the grub screws (904.21) during operation. This adjustment can be done several times during the lifetime of the static seal. The wear allowance of the static seal is about half of its thickness. If the seal has worn more or otherwise damaged, it must be replaced with a new one.

# 4 Bearing unit

## 4.1 Bearing types

**Table 3, Pump bearings**

| Shaft size | Impeller side | Coupling side |
|---|---|---|
| 1 | NUP 307 ECJ | 7308 BECBM |
| 2 | NUP 309 ECJ | 7310 BECBM |
| 3 | NUP 311 ECJ | 7312 BECBM |
| 4 | NUP 313 ECJ | 7314 BECBM |
| 5 | NUP 317 ECJ | 7318 BECBM |
| 6 | NUP 320 ECJ | 7322 BECBM |
| SKF designation. If bearings by other manufacturers are used, the corresponding bearing types are required. | | |

## 4.2 General information on grease lubrication

**CAUTION**

Never mix different grease grades (consistency, thickeners). The mixed grease becomes softer and does not lubricate the bearings properly.

**NOTE**

All greasing equipment and fittings used must be clean to avoid any impurities from entering the bearing housing.


COPYRIGHT © SULZER PUMPS FINLAND OY

| **N O T E** |
|---|
| The surface temperature of the bearing unit can temporarily rise after regreasing due to an excess amount of grease. |

All the grease-lubricated bearings have been lubricated before the shipment. The first re-lubrication should be done before the initial commissioning of the pump.

For normal conditions when the bearing housing surface temperature is below +176°F, we recommend lithium-based or lithium-calcium-based mineral greases for antifriction bearings, e.g.:

- Shell Gadus S2 V220 2
- Mobil, Mobilgrease XHP 222

If the bearings run hotter and the surface temperatures are above +176°F, we recommend the use of the following special greases:

- Shell Gadus S3 V550L 1
- Mobil, Mobilgrease XHP 461

These special greases can also be used with surface temperatures below +176°F. If the ambient temperature is below 32°F, always consult Sulzer about the use of the correct grease. All lubricants may not be suitable for low temperature use.

Always consult the pump manufacturer about the use of any special greases and their start-up.

### 4.1.1 Grease lubrication in AHLSTAR

Amounts of lubricants and re-lubrication intervals are described in Table 4 depending on the speed of rotation.

**Table 4, Initial and re-lubrication (60 Hz speeds of rotation)**

| **Shaft size** | Initial lubrication (oz) | | Re-lubrication (oz) | | Re-lubrication interval [1] (hours, bearing housing temperature ≤ +130 °F) | | | |
|---|---|---|---|---|---|---|---|---|
| | **Impeller side** | **Coupling side** | **Impeller side** | **Coupling side** | **890 rpm** | **1180 rpm** | **1780 rpm** | **3540 rpm** |
| 1 | 1.0 | 1.8 | 0.4 | 0.5 | 14000 | 10000 | 6500 | 2500 |
| 2 | 2.0 | 3.0 | 0.5 | 0.9 | 12000 | 8500 | 5000 | 2000 |
| 3 | 3.0 | 4.8 | 0.7 | 1.0 | 10000 | 7000 | 4000 | 1500 |
| 4 | 5.0 | 7.4 | 0.9 | 1.4 | 9000 | 6500 | 3500 | - |
| 5 | 7.8 | 13.8 | 1.4 | 2.1 | 7500 | 5000 | 2500 | - |
| 6 | 8.9 | 16.0 | 1.8 | 2.5 | 7500 | 5000 | - | - |
| [1] Every 27 °F rise in the surface temperature shortens the lubrication interval with a half. | | | | | | | | |

## 4.3 General information on oil lubrication

| **C A U T I O N** |
|---|
| For delivery, the bearing housing of the pump has been emptied of oil. Remember to refill it before starting. |


COPYRIGHT © SULZER PUMPS FINLAND OY

For lubrication, use only high-quality mineral oils, the viscosity of which is ISO VG 46.

E.g.

- Shell Tellus Oil S46
- Mobil DTE Oil Medium

The viscosity of oil at the operating temperature must not be below 12 cSt (65 SSU). Please take a note that the oil temperature may be different from the bearing housing surface temperature.

The oil cleanliness requirement is according to ISO 4406, solid contaminant code of oil: -/17/14. The maximum water concentration in oil is 200 ppm.

If the ambient temperature is below +32 °F, always consult Sulzer about the use of the correct synthetic oil. All lubricants may not be suitable for low temperature use.

### 4.2.1 Oil lubrication in AHLSTAR

#### First oil filling

Without using the constant level oiler

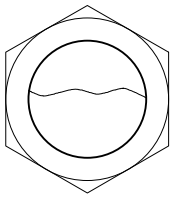


Fig. 5

Unscrew the venting device (672.31) and add oil up to the middle of the sight glass (642.31), Fig. 5. When pump is running oil level in the sight glass can be little variable. With lower speed oil level can go little bit lower and higher speed go little up (air is mixing into oil. Screw the venting device (672.31) back in place. See the oil volumes in Table 6.

With using the constant level oiler

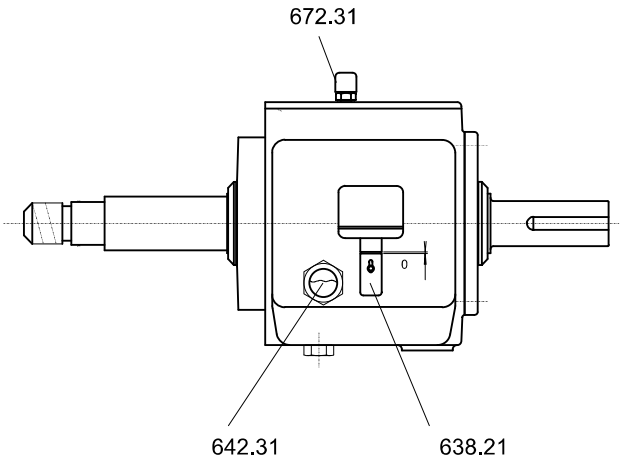


Fig. 6


COPYRIGHT © SULZER PUMPS FINLAND OY

Install the constant level oiler (638.31) in the bearing unit. Adjust the constant level oiler (638.31) to the correct height (0 in) and tighten the locking screw. Unscrew the venting device (672.31), add oil up to the middle of the sight glass (642.31) and screw the venting device (672.31) back in place. Undo the glass cup of the constant level oiler (638.31) and fill it with oil, and place the glass cup of the constant level oiler (638.31) back in place.

## Oil change

After commissioning, oil should be changed for the first time after about 100 hours of operation and thereafter according to Table 5 and more often if the operating conditions cause contamination or change in other properties of the oil used.

**Table 5, Oil changes**

| Surface temperature of bearing housing | Oil change interval |
|---|---|
| 150 °F | 1 year |
| 170 °F | 6 months |

**Table 6, Oil volumes**

| Bearing unit | Oil volume (quart) |
|---|---|
| 1 | 0.2 |
| 2 | 0.5 |
| 3 | 0.6 |
| 4 | 0.9 |
| 5 | 2.2 |
| 6 | 3.7 |


COPYRIGHT © SULZER PUMPS FINLAND OY

SULZER

SPP id: Version 14 > / 140901 / Replaces 140530 / en / **N32200** / 3

# AHLSTAR

## PROCESS PUMPS

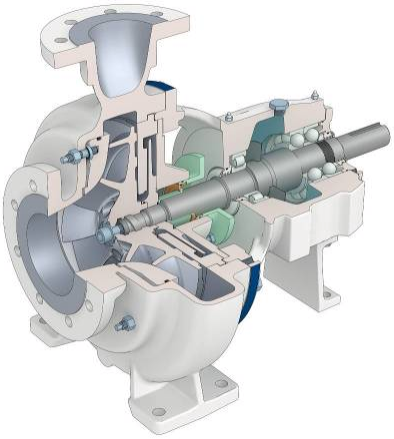

**Corrective maintenance**


1 General
2 Pump unit
3 Wet end
4 Sealing unit
5 Bearing unit



COPYRIGHT © SULZER PUMPS FINLAND OY

# 1 General

| NOTE |
|---|
| Refer to the sectional drawings when reading through these instructions. |

## 1.1 Safety instructions and environmental aspects to be noted before corrective maintenance

| WARNING |
|---|
| When pumping hazardous liquids, secure that there is no trapped liquid remaining in pump parts. Pumps which convey hazardous media must be carefully decontaminated before any repairs. Skin and eye protection are required during decontamination. Precautions are needed for personal or environmental safety.<br>Some of the disassembled parts and assemblies are heavy, unstable and due to design requirements they contain sharp edges (e.g. impeller, sideplate, casing cover). Use proper hoistings and supports to prevent personal injury. |

| WARNING |
|---|
| Hazardous substances must be kept away from the environment. These substances should be collected and sent for proper handling. All recyclable components should be taken to a proper recycling system. |

## 1.2 Necessary equipment / tools

### Normally available working tools

- Hoisting accessories. Note the safety requirements!
- Wrenches for hexagonal screws, sizes (in): 1/2, 9/16, 3/4, 7/8, 15/16, 1 1/8
- Allen wrenches for socket head screws, sizes (in): 3/32, 5/32, 3/16, 1/4, 5/16, 3/8, 1/2
- Torque wrenches for moments (lbft): 20, 40, 95, 185, 310, 590
  - for hexagonal, sizes (in): 3/4, 15/16, 1 1/8
  - for socket head, sizes (in): 5/16, 3/8, 1/2, 5/8, 3/4, 7/8
- Hooked wrenches, sizes (SKF): HN8, HN10, HN12, HN14, HN18, HN22, HN26
- Extractors
- Bearing heater
- Dial indicators
- Cleaning agents & equipment
- Lubricating agents & equipment


COPYRIGHT © SULZER PUMPS FINLAND OY

### Special tools

- Detachment tool for the casing wear ring/sideplate. Fig. 1.
- Pipe punch series for roller bearings and lubrication rings. Fig. 5.
- Securing tool for impeller head screw. Fig. 3.

# 2 Pump unit

## 2.1 Disassembly

| N O T E |
|---|
| Ensure that all eventual spare parts are available before the disassembly. |

### Preliminaries

1 Close the discharge valve.
2 Stop the motor. Make sure that the motor cannot be started by any means during the repair.
3 Close the suction valve.
4 Drain the pump carefully. For this, use the threaded plug (903.11) potentially situated at the bottom of the volute case (102.11).
5 Disconnect potential guards, pipes and sealing water equipment relating to degassing and shaft seal.
6 Remove the guard jackets (686.51 and 686.52) and coupling (840.51) spacer.
7 Drain oil from an oil-lubricated bearing housing by unscrewing the threaded plug (903.32).

### Detachment of exchange unit

1 Unscrew the hexagon head screws (901.11) and the hexagon head screws (901.62) of the support foot from the baseplate (890.61).
2 Suspend the exchange unit by a hoist at the maintenance opening of the adapter or underneath the adapter.
3 Pull out the exchange unit by using the hexagon head screws (901.11).

## 2.2 Reassembly

### Preliminaries

- Clean all gasket surfaces and fittings from rust and layers.
- Inspect for unusual erosion, pitting and wear in parts.
- Inspect keyways and bores for damage.
- Inspect the pump and baseplate for cuts and cracks.

### Installation of exchange unit

1 Fix the support foot of the bearing unit by means of the hexagon head screws (901.32).


COPYRIGHT © SULZER PUMPS FINLAND OY

2 Heat the coupling flange to approx. +212°F and push it on the shaft with the front surface at the shaft end level.

3 Suspend the exchange unit with a hoist at the maintenance opening of the adapter or underneath the adapter.

4 Fit the gasket (400.21) into the case cover (161.21).

5 Install the exchange unit in its place, lubricate the hexagon head screws (901.11) with Molycote Ti 1200 lubricant and tighten them in a cross bolt pattern little by little; first 30% of moment in Table 1, then 60% of moment in Table 1 and then 100% of moment in Table 1. Finally tighten the screws screw by screw clockwise with 100% of moment given in Table 1.

**Table 1, Exchange unit fastening screws (901.11)**

| Screw size | Moment (lb ft) | |
|---|---|---|
| | Rating | Max. value |
| 1/2 - 13 UNC | 35 | 45 |
| 5/8 – 11 UNC | 95 | 120 |
| 3/4 - 10 UNC | 185 | 220 |
| 1 - 8 UNC | 310 | 385 |

6 Check the impeller clearance according to the Section ”Preventive maintenance”.

7 Place adjusting plates under the support foot. The plates must have the same thickness as the gap under the support foot. Do not close the gap by tightening.

8 Fix the support foot (183.31) to the baseplate (890.61) with the hexagon head screws (901.62).

9 Lubricate the bearing unit with oil or grease according to lubricating instructions in Section ”Operation”.

10 Install the coupling spacer according to the coupling manufacturer’s instructions.

11 Fix the coupling guard jackets (686.51and 686.52). The coupling guard must be adjusted so that the space between the coupling guard and motor is approx. 0.2 in.

12 Install the auxiliary pipings, guards, accessories and sealing unit equipment according to sectional drawings.

**WARNING**

Proper adjustment of the coupling guard jacket is a relevant safety factor.

# 3 Wet end

## 3.1 Disassembly

### Detachment of casing wear ring (pump types: APT and EPT / closed impeller)

The casing wear ring (502.11) between the closed impeller and volute casing and also the casing wear ring (502.12) between the impeller and casing cover in the pump type EPT can be removed with a suitable tool by using the three notches situated under the casing wear ring, Fig. 1.

### Detachment of sideplate

1 Unscrew the three nuts (920.11).


COPYRIGHT © SULZER PUMPS FINLAND OY

2 Turn the potential adjusting screws (909.11) counter-clockwise. As a result the sideplate protrudes out.

3 The sideplate can now be removed with a proper tool from the volute casing. Fig. 1.

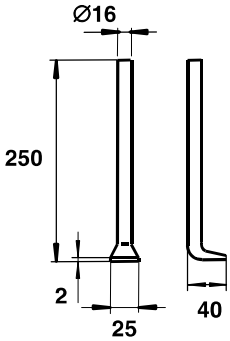


Fig. 1

### Detachment of impeller

1 Fasten the exchange unit firmly to a vice.

2 Unscrew the cap screw socket head (914.11) of the impeller (230.11).

3 Prevent the shaft (210.31) from rotating at the coupling (840.51) end.

4 Detach the impeller by turning it counter-clockwise. Push e.g. pieces of wood between the impeller vanes to ease the detachment. Never use metal bars or the like, because they might damage the impeller vanes. Fig. 2.

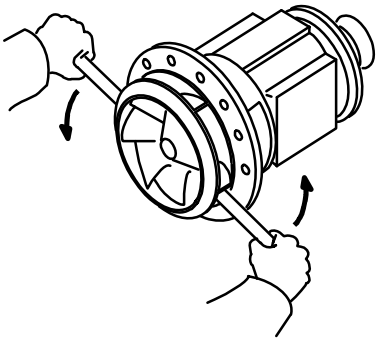

Fig. 2

## 3.2 Reassembly

### Installation of impeller

| WARNING |
|---|
| The socket head screw (914.11) must be secured to avoid loosening of the impeller. |

| NOTE |
|---|
| When installing the impeller and the sideplate, replace all O-rings with new ones. |


COPYRIGHT © SULZER PUMPS FINLAND OY

1 Make sure that the o-rings behind the impeller are properly installed.

2 Prevent the shaft from rotating from the coupling end and insert the impeller (230.11) into its place. The clearance between the impeller and case cover (161.21) is about 0.04 in.

3 Lock the impeller with the socket head capscrew (914.11) onto which the o-ring (412.14) has been fitted.

4 Tighten the socket head screw to the torque value given in Table 2.

**Table 2, Impeller locking screw 914.11**

| Shaft size | Screw size | Torque (lb ft) | |
|---|---|---|---|
| | | Rating | Max. value |
| 1 | 3/8 – 16 UNC | 20 | 30 |
| 2 | 1/2 – 13 UNC | 35 | 45 |
| 3 | 5/8 – 11 UNC | 95 | 100 |
| 4 | 3/4 – 10 UNC | 180 | 190 |
| 5 | 1 – 8 UNC | 305 | 320 |
| 6 | 1 1/4 – 7 UNC | 580 | 600 |

Secure the socket head capscrew (914.11) by bending its flange into one hole on the impeller. Use a tool with the head shape and dimensions shown in Fig. 3.

The same socket head screw can be used many times. There are two extra holes on the impeller for securing later on.

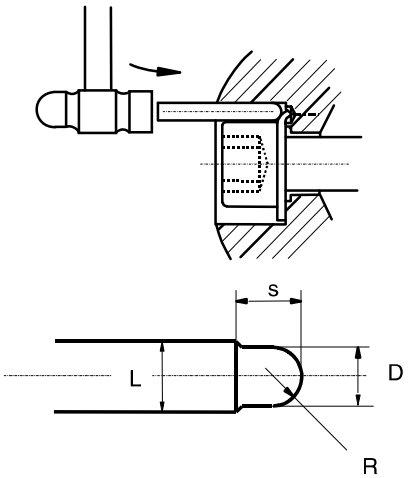


| Shaft size | L (in) | Ø D (in) | R (in) | $S_{min}$ (in) |
|---|---|---|---|---|
| 1, 2 | 0.250 $^{0}_{-0.02}$ | 0.15 | 0.075 | 0.25 |
| 3, 4 | 0.295 $^{0}_{-0.02}$ | 0.25 | 0.125 | 0.275 |
| 5, 6 | 0.354 $^{0}_{-0.02}$ | 0.30 | 0.150 | 0.30 |

Fig. 3

## Installation of sideplate

### APT, NPT, WPT

1 Grease the o-rings (412.11 and 412.13) lightly and fit them into the grooves of the sideplate (135.11).

2 Screw the adjusting screws (909.11) all the way into the sideplate.

3 Install the sideplate into the volute case (102.11).


COPYRIGHT © SULZER PUMPS FINLAND OY

4 Fix the nuts (920.11) to the adjusting screws.

**Fixed sideplate of pump type EPT (open impeller)**

1 Screw the studs (902.11) tightly into place in the sideplate.
2 Push the back-up rings (516.11) and o-rings (412.12) onto the studs against the sideplate.
3 Install the sideplate into place in the volute case (102.11).
4 Mount and tighten the nuts (920.11).

### Installation of casing wear ring (pump types: APT and EPT / closed impeller)

Tap the casing wear ring (502.11) into the volute case (102.11) (and the wear ring (502.12) into the case cover (161.21) of an EPT pump) with a soft hammer. Check that the wear ring is tightly against the bottom of its groove at each side.

# 4 Sealing unit

## 4.1 Disassembly

| CAUTION |
|---|
| The threaded hole in the casing cover is only meant for lifting the casing cover. |

### Dynamic seal, plate type (types DS13 and DS14)

1 Loosen the hexagon head screws (901.21) and remove the guards (683.21 and 683.22).
2 Uncrew the hexagon head screws (901.21).
3 Detach the case cover (161.21) by levering from the slot between the case cover and adapter (344.31). In heavier case covers, there is a threaded hole (size M8) for lifting the cover by using an eye screw.
4 Detach the expeller (604.21) from the shaft.
5 By using the hexagon head screws (901.21) as extractors, draw the stuffing box housing (451.21) out of the guiding in the adapter.
6 The cover plate for seal (471.21) and the static seal (435.21) can be detached by unscrewing the nuts (920.21).
7 Unscrew the grub screws (904.21) and detach the thrust ring (475.21) from the shaft.
8 Unscrew the hexagonal screws (901.33) of the adapter and draw the adapter out by using the same screws as extractors.

### Mechanical seal, cartridge single on the shaft sleeve (types MS33 and MS34)

1 Loosen the hexagon head screws (901.21) and remove the guards (683.21 and 683.22).
2 Unscrew the hexagon head screws (901.21).
3 Unscrew the nuts (920.21).
4 By using the said screws as extractors, draw the case cover (161.21) out of the adapter (344.31). In heavier case covers, there is a threaded hole (size M8) for lifting the cover by using an eye screw. All parts belonging to the mechanical seal (433.21) will remain on the shaft.


COPYRIGHT © SULZER PUMPS FINLAND OY

5 The mechanical seal can now be removed from the shaft and from the casing cover and dismantled according to the seal manufacturer's instructions.

6 Remove the shaft wearing sleeve (524.21) from the shaft with an extractor.

7 Unscrew the hexagon head screws (901.33) of the adapter and draw the adapter out by using the same screws as extractors.

## Mechanical seal, cartridge double on the shaft sleeve (type MS42)

1 Loosen the hexagon head screws (901.21) and remove the guards (683.21 and 683.22).

2 Unscrew the hexagon head screws (901.21).

3 Unscrew the nuts (920.21).

4 By using the said screws as extractors, draw the case cover (161.21) out of the adapter (344.31). In heavier casing covers, there is a threaded hole (size M8) for lifting the cover by using an eye screw. All parts belonging to the mechanical seal (433.21) will remain on the shaft.

5 The mechanical seal can now be removed from the shaft and from the casing cover and dismantled according to the seal manufacturer's instructions.

6 Remove the shaft wearing sleeve (524.21) from the shaft with an extractor.

7 Unscrew the hexagon head screws (901.33) of the adapter and draw the adapter out by using the same screws as extractors.

## Mechanical seal, ready-fitted single (types MS71 and MS72)

1 Loosen the hexagon head screws (901.21) and remove the guards (683.21 and 683.22).

2 Unscrew the hexagon head screws (901.21).

3 By using the said screws as extractors, draw the case cover (161.21) out of the adapter (344.31). In heavier casing covers, there is a threaded hole (size M8) for lifting the cover by using an eye screw. The components of the mechanical seal (433.21) come off the shaft.

4 Unscrew the nuts (920.21) of the case cover (161.21).

5 The mechanical seal can now be removed from the case cover (161.21) and dismantled according to the seal manufacturer's instructions.

6 Unscrew the hexagon head screws (901.33) of the adapter and draw the adapter out by using the same screws as extractors.

## Mechanical seal, ready-fitted double (type MS81)

1 Loosen the hexagon head screws (901.21) and remove the guards (683.21 and 683.22).

2 Unscrew the hexagon head screws (901.21).

3 By using the said screws as extractors, draw the case cover (161.21) out of the adapter (344.31). In heavier casing covers, there is a threaded hole (size M8) for lifting the cover by using an eye screw. The components of the mechanical seal (433.21) come off the shaft.

4 Unscrew the nuts (920.21) of the case cover (161.21).

5 The mechanical seal can now be removed from the case cover (161.21) and dismantled according to the seal manufacturer's instructions.

6 Remove the rotating part on the atmospheric side of the mechanical seal (433.21) from the shaft by opening the hexagonal retainer screws.

7 Unscrew the hexagon head screws (901.33) of the adapter and draw the adapter out by using the same screws as extractors.


COPYRIGHT © SULZER PUMPS FINLAND OY

## Mechanical seal, US, outside single (type MS91)

1. Loosen the hexagon head screws (901.21) and remove the guards (683.21 and 683.22).
2. Unscrew the hexagon head screws (901.21).
3. By using the said screws as extractors, draw the case cover (161.21) out of the adapter (344.31). In heavier case covers, there is a threaded hole (size M8) for lifting the cover by using an eye screw.
4. The rotating part of the mechanical seal (433.21) will remain on the shaft.
5. The cover plate for seal (471.21) and the static part of the mechanical seal can be detached from the case cover by unscrewing the screws (914.21).
6. The rotating part can now be removed from the shaft and dismantled according to the seal manufacturer's instructions.
7. Unscrew the hexagon head screws (901.33) of the adapter and draw the adapter out by using the same screws as extractors.

## Gland packing (type PG11)

1. Loosen the hexagon head screws (901.21) and remove the guards (683.21 and 683.22).
2. Unscrew the hexagon head screws (901.21) of the case cover (161.21).
3. By using the said screws as extractors, draw the case cover (161.21) out of the adapter (344.31). In heavier case covers, there is a threaded hole (size M8) for lifting the cover by using an eye screw. All parts belonging to the gland packing, except the shaft wearing sleeve (524.21), will stay in the casing cover.
4. Unscrew the nuts (920.21) and remove the two-piece stuffing box gland (452.21). The neck bush (456.21), gland packing (461.21) and lantern ring (458.21) can now be drawn out of the casing cover.
5. Remove the shaft wearing sleeve (524.21) from the shaft with an extractor.
6. Unscrew the hexagon head screws (901.33) of the adapter and draw the adapter out by using the same screws as extractors.

## Liquid ring pump, element single (type SM11)

1. Detach the pipe (700.23) with the peripheral equipment from the case (100.21) if a vacuum relief valve (695.21) is included in the delivery.
2. Unscrew the hexagon head screws (901.21).
3. Remove the case cover (161.21) by levering from the slot between the case cover and adapter (344.31).
4. Remove the o-ring (412.23) from the case (100.21).
5. Remove the suction impeller (231.21) from the shaft. Pull the shaft wearing sleeve (524.21) from the shaft. The rotating part of the mechanical seal (433.21) will come off, too, and the static part will remain in the cover plate for seal. Notice the compressor rings (487.21) between the suction impeller and shaft wearing sleeve.
6. Pull the case (100.21) out of the guideway in the adapter with the help of hexagon head screws (901.21). Detach the cover plate for seal (471.21) by unscrewing the socket head capscrews (914.21).
7. The rotating part of the mechanical seal can now be removed from the shaft wearing sleeve and the static part from the cover plate for seal. Make sure not to damage the sliding surfaces.
8. Unscrew the hexagon head screws (901.33) of the adapter and draw the adapter out by using the same screws as extractors.

## Liquid ring pump, ready-fitted double (type SM21)

1. Detach the pipe (700.23) with the peripheral equipment from the case (100.21) if a vacuum relief valve (695.21) is included in the delivery.
2. Unscrew the hexagon head screws (901.21).


COPYRIGHT © SULZER PUMPS FINLAND OY

3 Detach the case cover (161.21) by levering from the slot between the case cover and adapter (344.31).

4 Remove the o-ring (412.23) from the case (100.21).

5 Remove the suction impeller (231.21) from the shaft. The rotating part on the product side of the mechanical seal (433.21) will come off, too, and the static part will remain in the case. Notice the compressor rings (487.21) between the suction impeller and mechanical seal.

6 Pull the case (100.21) out of the guideway in the adapter (344.31) with the help of hexagon head screws (901.21).

~~7~~ The static part of the mechanical seal is detached from the case (100.21) by unscrewing the socket head capscrews (914.21).

8 The rotating part on the atmospheric side of the mechanical seal can be removed from the shaft by opening the hexagonal retainer screws.

9 Unscrew the hexagon head screws (901.33) of the adapter and draw the adapter out by using the same screws as extractors.

### Air separating pump, element single (type RM11)

1 Open the two hexagon head screws (901.21) of the case cover (161.21).

2 By using the above mentioned screws as extractors, push the case cover (161.21) and cover (160.21) out of the stuffing box housing (451.21).The gasket (400.23) may be replaced if needed.

3 The case cover and cover may be detached from each other, so that the condition of the o-ring (412.23) and the gasket (400.23) may be checked and replaced if needed.

4 Pull the expeller (235.21) off the shaft by levering against the stuffing box housing. The rotating parts of the mechanical seal (433.21) follow with the expeller.

5 Special care should be taken not to damage the sliding surfaces of the mechanical seal. The mechanical seal can be removed from the expeller by detaching the locking screws of the seal.

6 Unscrew the nuts (920.22) of the stuffing box housing (451.21) and lever the stuffing box housing out of the bearing housing (330.31) guide using the two slots at the interface of the bearing housing.

7 The stationary seat of the mechanical seal (433.21) can be removed from the stuffing box housing. Special care should be taken not to damage the sliding surfaces of the seal.

## 4.2 Reassembly

### Dynamic seal, plate type (types DS13 and DS14)

1 Fix the adapter (344.31) to the bearing housing (330.31) with the hexagon head screws (901.33).

2 Slide the thrust ring (475.21) with its o-ring (412.25) and grub screws (904.21) along the shaft to a preliminary position up to the hindmost shoulder.

3 Install the o-ring (412.24), static seal (435.21) and cover plate for seal (471.21) into the stuffing box housing (451.21) by using studs (902.21) and nuts (920.21). Observe that the static seal must be placed in the right way and centrally in its guiding slot in the stuffing box housing.

4 Push the stuffing box housing with its parts into its place in the adapter.

5 Push the expeller (604.21) with the o-rings (412.21, 412.22) fitted in its hub onto the shaft.

6 Install the gasket (400.22) into the stuffing box housing or the o-ring (412.23) into the case cover (161.21).

7 Push the case cover into its place in the adapter and fasten the hexagon head screws (901.21). Continue the assembly according to the following section "Installation of impeller".

8 When the exchange unit is fully assembled, place the thrust ring (475.21) at the right position on the shaft and fasten the grub screws (904.21). The distance between the face of the cover plate for seal and the shoulder of the thrust ring must be 0.394 in. Fig. 4.

9 Loosen the hexagon head screws (901.21) and mount the guards (683.21 and 683.22). Tighten the screws.


COPYRIGHT © SULZER PUMPS FINLAND OY

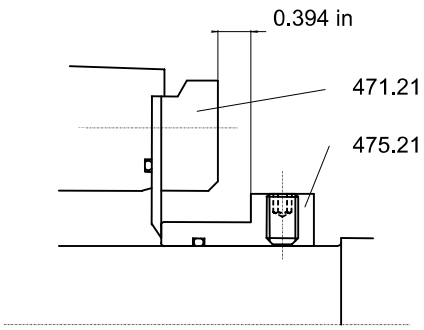


Fig. 4

## Mechanical seal, cartridge single on the shaft sleeve (types MS33 and MS34)

1. Fix the adapter (344.31) to the bearing housing (330.31) with the hexagon head screws (901.33).
2. Mount the mechanical seal (433.21) into the case cover (161.21). Follow the instructions provided by the seal manufacturer.
3. Push the shaft wearing sleeve (524.21) onto the shaft.
4. Push the case cover (161.21) together with the incorporated parts onto the shaft. Follow the instructions provided by the seal manufacturer. Fix the screws (901.21). Tighten the nuts (920.21).
5. Complete all the lockings, fixings and other seal-related jobs as described in the seal manufacturer's instructions. Continue the assembly according to the following section ”Installation of impeller”.
6. Loosen the hexagon head screws (901.21) and mount the guards (683.21 and 683.22). Tighten the screws.

## Mechanical seal, cartridge double on the shaft sleeve (type MS42)

1. Fix the adapter (344.31) to the bearing housing (330.31) with the hexagon head screw (901.33).
2. Mount the mechanical seal (433.21) into the case cover (161.21). Follow the instructions provided by the seal manufacturer.
3. Push the shaft wearing sleeve (524.21) onto the shaft.
4. Push the case cover (161.21) together with the incorporated parts onto the shaft. Follow the instructions provided by the seal manufacturer. Fix the screws (901.21). Tighten the nuts (920.21).
5. Complete all the lockings, fixings and other seal-related jobs as described in the seal manufacturer's instructions. Continue the assembly according to the following section ”Installation of impeller”.
6. Loosen the hexagon head screws (901.21) and mount the guards (683.21 and 683.22). Tighten the screws.

## Mechanical seal, ready-fitted single (types MS71 and MS72)

1. Fix the adapter (344.31) to the bearing housing (330.31) with the hexagon head screws (901.33).
2. Install the gasket (400.21) if included in the delivery
3. Mount the static part of the mechanical seal (433.21) into the case cover (161.21), and the outer rotating part onto the shaft according to the seal manufacturer’s instructions. Tighten the nuts (920.21).
4. Push the case cover (161.21) together with the incorporated parts onto the shaft. Fix the screws (901.21).
5. Push the rotating part of the mechanical seal onto the shaft against the shoulder. Continue the assembly according to the following section ”Installation of impeller”.
6. Loosen the hexagon head screws (901.21) and mount the guards (683.21 and 683.22). Tighten the screws.


COPYRIGHT © SULZER PUMPS FINLAND OY

## Mechanical seal, ready-fitted double (type MS81)

1. Fix the adapter (344.31) to the bearing housing (330.31) with the hexagon head screws (901.33).
2. Install the gasket (400.21) if included in the delivery.
3. Mount the static part of the mechanical seal (433.21) into the case cover (161.21), and the outer rotating part onto the shaft according to the seal manufacturer's instructions. Tighten the nuts (920.21).
4. Push the case cover (161.21) together with the incorporated parts onto the shaft. Fix the screws (901.21).
5. Push the rotating part of the mechanical seal onto the shaft against the shoulder. Continue the assembly according to the following section "Installation of impeller".
6. Loosen the hexagon head screws (901.21) and mount the guards (683.21 and 683.22). Tighten the screws.

## Mechanical seal, US, outside single (type MS91)

1. Fix the adapter (344.31) to the bearing housing (330.31) with the hexagon head screws (901.33).
2. Mount the static part of the mechanical seal (433.21) into the case cover (161.21) with the cover plate for seal (471.21). Follow the instructions provided by the seal manufacturer. Tighten the socket head capscrews (914.21).
3. Push the shaft wearing sleeve (524.21) onto the shaft against the shoulder.
4. Push the rotating part of the mechanical seal (433.21) almost to its proper place on the shaft wearing sleeve. Follow the instructions provided by the seal manufacturer.
5. Push the case cover (161.21) together with the incorporated parts onto the shaft. Fix the screws (901.21).
6. Mount the mechanical seal (433.21) into its final place according to the seal manufacturer's instructions. Complete all the lockings, fixings etc. as described in the manufacturer's instructions. Continue the assembly according to the following section "Installation of impeller".
7. Loosen the hexagon head screws (901.21) and mount the guards (683.21 and 683.22). Tighten the screws.

## Gland packing (type PG11)

1. Fix the adapter (344.31) to the bearing housing (330.31) with the hexagon head screws (901.33).
2. Place the case cover (161.21) on a horizontal surface with the sealing cavity upwards.
3. Place the neck bush (456.21) to the bottom of the sealing cavity.
4. Put the shaft wearing sleeve (524.21) in an upright position to the middle of the sealing cavity.
5. Insert the first two gland packings (461.21), the lantern ring (458.21), the other two gland packings and the two-piece stuffing box gland (452.21). Tighten the nuts (920.21) by hand.
6. Push the casing cover with gland packing parts onto the shaft. Check that the shaft wearing sleeve is placed towards the shaft shoulder.
7. Attach the case cover to the adapter with hexagon head screws (901.21). Continue the assembly according to the following section "Installation of impeller".
8. Loosen the hexagon head screws (901.21) and mount the guards (683.21 and 683.22). Tighten the screws.

## Liquid ring pump, element single (type SM11)

1. Fix the adapter (344.31) into the bearing housing (330.31) with hexagonal screws (901.33).
2. Push the case (100.21) into its guideway into the adapter (344.31).
3. First, push the shaft wearing sleeve (524.21) and then the series of compressor rings (487.21) onto the shaft.
4. Push the suction impeller (231.21) onto the shaft. Do not install the o-rings (412.21), the parts of the mechanical seal (433.21) nor the cover plate for seal (471.21) yet.


COPYRIGHT © SULZER PUMPS FINLAND OY

5 Measure the gap between the suction impeller (231.21) and case (100.21), and adjust it according to Table 3 by taking off or adding compressor rings (487.21). While measuring the gap, make sure that both the case and the suction impeller are tightly in their guideway pressed all the way to the bottom.

**Table 3, Gap between the suction impeller and casing**

| Shaft size | Gap (in) |
|---|---|
| 1 | 0.008 - 0.012 |
| 2 | 0.008 - 0.012 |
| 3 | 0.008 - 0.012 |
| 4 | 0.010 - 0.014 |
| 5 | 0.012 - 0.016 |

Measure the gap between the end of the suction impeller hub and the case. The gap is bigger at the vanes of the suction impeller, since the front face of the vanes is slightly conical.

Once the gap between the suction impeller and case is correct, the gap between the suction impeller and the case cover (161.21) will also become automatically correct.

6 After adjusting the gap, remove the suction impeller, shaft wearing sleeve and case again so as to perform the actual assembly.

7 Fasten the cylinder pins (562.22 and 562.21) into the cover plate for seal (471.21) and case (100.21).

8 Install the static part of the mechanical seal (433.21) into the cover plate for seal (471.21). Make sure that the position of the static part in relation to the cylinder pin is correct. Place the o-ring (412.24) into the groove in the cover plate for seal. Install the cover plate for seal into the case (100.21) with socket head capscrews (914.21).

9 Install the case (100.21) with its parts into its guideway into the adapter (344.31).

10 Install the rotating part of the mechanical seal (433.21) into place into the shaft wearing sleeve (524.21) and push the shaft wearing sleeve onto the shaft.

11 Install the needed the compressor rings (487.21) onto the shaft.

12 Place the o-ring (412.21) into its groove and then push the suction impeller (231.21) onto the shaft.

13 Install the o-ring (412.23) into its groove in the case (100.21).

14 Install the case cover (161.21) into its guideway into the adapter (344.31). Make sure that the cylinder pin (562.21) goes into its hole in the case cover. Fix the screws (901.21). Continue the assembly according to the following section ”Installation of impeller”.

## Liquid ring pump, ready-fitted double (type SM21)

1 Fix the adapter (344.31) into the bearing housing (330.31) with hexagonal screws (901.33).

2 Push the case (100.21) into its guideway into the adapter (344.31).

3 Push the inner rotating part of the mechanical seal (433.21) on the shaft against the shoulder. Remove the o-ring from the periphery of the part.

4 Put the series of compressor rings (487.21) onto the shaft against the front face of the part of the mechanical seal.

5 Push the suction impeller (231.21) onto the shaft. Do not insert the o-ring (412.21) at this stage.

6 Measure the gap between the suction impeller (231.21) and case (100.21), and adjust it according to Table 3 by taking off or adding compressor rings (487.21). While measuring the gap, make sure that both the case and the suction impeller are tightly in their guideway pressed all the way to the bottom. Measure the gap between the end of the suction impeller hub and the case because the front face of the vanes is slightly conical.

7 After adjusting the gap, remove the parts again so as to perform the actual assembly.

8 Push the outer rotating part of the mechanical seal onto the shaft against the shoulder.


COPYRIGHT © SULZER PUMPS FINLAND OY

9 Install the static part of the mechanical seal into the case (100.21). Fasten the socket head capscrews (914.21).

10 Push the case (100.21) into its guideway into the adapter (344.31).

11 Push the inner rotating part of the mechanical seal (433.21) onto the shaft. Put the o-ring (which was removed in item 3) back into its groove to the periphery of the part.

12 Push the compressor rings (487.21) onto the shaft against the front face of the part of the mechanical seal.

13 Place the o-ring (412.21) into its groove inside the suction impeller and then push the suction impeller (231.21) onto the shaft.

14 Push the cylinder pin (562.21) into its hole in the case (100.21).

15 Place the o-ring (412.23) into its groove in the case (100.21).

16 Install the case cover (161.21) into its guideway into the adapter (344.21). Tighten the hexagon head screws (901.21). Continue the assembly according to the following section ”Installation of impeller”.

### Air separating pump, element single (type RM11)

1 Press the stationary seat of the mechanical seal (433.21) with its o-ring into the adapter (344.31) without damaging the sliding surface of the seal.

2 Fix the stuffing box housing (451.21) to the bearing housing (330.31) with the nuts (920.22) of the studs (902.22). Do not damage the sliding surface of the seal.

3 Fix the rotating part of the mechanical seal (433.21) on the expeller (235.21), making sure it fits tightly against the shoulder and lock it with the locking screws of the seal. The sliding surfaces must not be damaged.

4 Push the expeller with seal onto the shaft.

5 Fit the o-ring (412.23) on the cover (160.21).

6 Fit the gaskets (400.23) in their places between the cover (160.21) and the case cover (161.21) and between the cover (160) and the stuffing box housing (451.21).

7 Fix the combination of cover and case cover to the adapter with hexagon head screws (901.21). Continue the assembly according to the following section ”Installation of impeller”.

# 5 Bearing unit

| N O T E |
|---|
| The bearing unit may be grease-lubricated or bath oil lubricated. |

## 5.1 Disassembly

| N O T E |
|---|
| Always renew the bearings once they have been removed from the shaft. |

1 Fasten the bearing unit firmly to a vice at the bearing housing (330.31).

2 Detach the coupling (840.51) using an extractor.

3 Unscrew the hexagon head screws (901.31) and washers (554.31) of the bearing cover (360.31). Remove the guard end (685.51).


COPYRIGHT © SULZER PUMPS FINLAND OY

4 Draw the bearing cover out by using the hexagon head screws (901.31). As a result, the deflector (507.31) will also come off.

5 Strike the pump side end of the shaft (210.31) with a soft hammer, where upon the shaft with its bearings will come off the bearing housing. Simultaneously the other deflector (507.31) also comes off.

6 Fasten the shaft with its bearings to a vice and detach the bearing nut (923.31) and lockwasher (931.31).

7 Detach the antifriction bearings (320.31 and, 320.32) from the shaft with an extractor or by means of a hammer and a punch.

## 5.2 Reassembly

| **N O T E** |
|---|
| It is absolutely necessary to place the bearings correctly according to the O-system (so called Back-To-Back-Design). |

1 Inspect the shaft (210.31) with its shaft wearing sleeve (524.21) using a measuring tool for radial run-out. The radial run-out between these parts may not exceed 0.002 in.

2 Fasten the shaft to a vice with the impeller end of the shaft upwards. Use soft sheets between the vice clamp jaws to avoid shaft damage. Heat the cylinder roller bearing (320.31) to ca +212°F and push it onto the shaft. Remember to place the spacer ring of the bearing on the shaft shoulder side. Fig. 5.

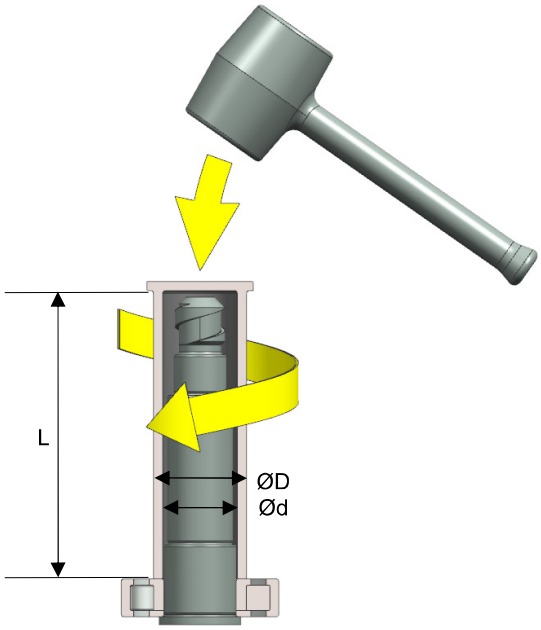


| Shaft size (in) | 1 | 2 | 3 | 4 | 5 | 6 |
|---|---|---|---|---|---|---|
| **Ød** | 1.5 | 1.9 | 2.3 | 2.7 | 3.5 | 4.1 |
| **ØD** | 2.0 | 2.4 | 2.8 | 3.2 | 4.0 | 4.5 |
| **$L_{min}$** | 7.5 | 8.1 | 8.7 | 11.0 | 12.5 | 14.0 |

Fig. 5

3 Let the bearing cool down. Then tap it tightly by the inner ring against the shoulder using a pipe punch. Rotate the pipe punch between the blows.

4 Turn the shaft so that the coupling side is upwards, fasten it to a vice.


COPYRIGHT © SULZER PUMPS FINLAND OY

5 Heat the two angular contact ball bearings (320.32) to approx. +212°F and push them onto the shaft. Let the bearings cool down.

6 Place the lockwasher (931.31) on the shaft.

7 Tighten the angular contact ball bearings by means of the bearing nut (923.31) tightly against the shaft shoulder, use a suitable hooked wrench.

8 Bend the lockwasher tooth into the bearing nut slots.

9 Tighten the bearing housing (330.31) vertically to the vice with the coupling side upwards.

10 Grease the O-rings (412.32) of the labyrinth rings (423.31) lightly and stretch them into their grooves. Tap the labyrinth rings (423.31) with a soft mallet into the bearing housing (330.31) and bearing cover (360.31). Note that the drain holes in the labyrinth rings come underneath.

11 Heat the bearing housing first slightly (max. +175°F) to ease the installation of the shaft unit.

12 Lower the shaft carefully into the bearing housing. Make sure not to damage the labyrinth ring in the bearing housing.

13 Grease the o-ring (412.31) of the bearing cover lightly and stretch it into its groove.

14 Set the bearing cover into its place. Note that the drain holes in the labyrinth ring come underneath. Place the guard end (685.51) on the bearing cover, mount the washers (554.31) and fix it with the hexagon head screws (901.31) into the bearing housing. Tighten the hexagonal screws of the bearing cover.

15 Place the deflectors (507.31) with care onto the shaft by using e.g. a special pipe punch shown in Fig. 6. Grease the rubber lip before installation.

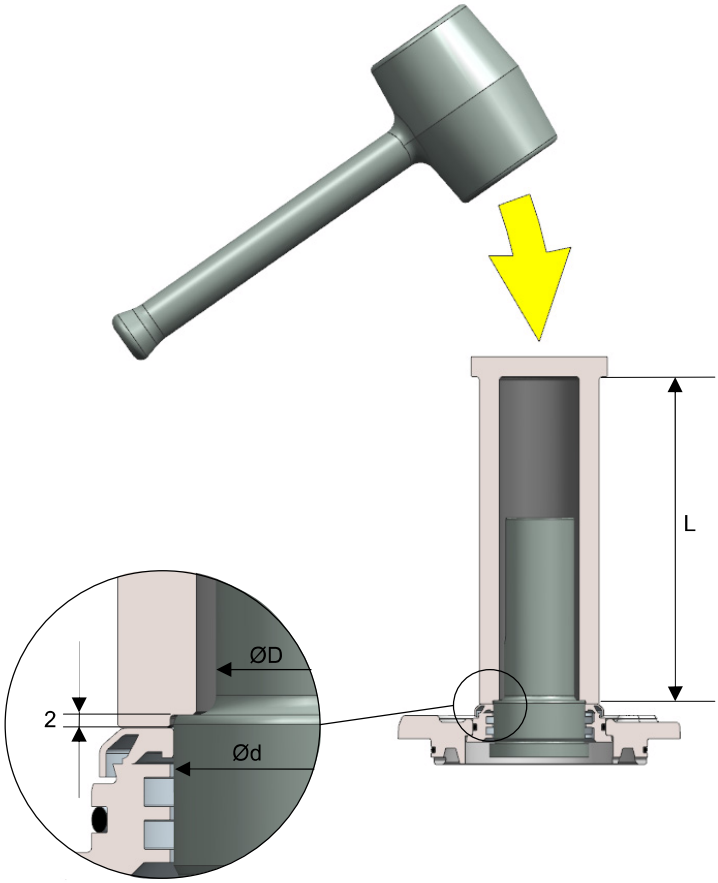


| Shaft size (in) | Coupling side | | | Impeller side | | |
|---|---|---|---|---|---|---|
| | Ød | ØD | Lmin | Ød | ØD | Lmin |
| 1 | 1.0 | 1.378 | 6.3 | 1.181 | 1.378 | 6.3 |


COPYRIGHT © SULZER PUMPS FINLAND OY

| Shaft size (in) | Coupling side | | | Impeller side | | |
|---|---|---|---|---|---|---|
| | Ød | ØD | Lmin | Ød | ØD | Lmin |
| 2 | 1.25 | 1.772 | 7.1 | 1.575 | 1.772 | 7.1 |
| 3 | 1.625 | 2.165 | 7.7 | 1.969 | 2.165 | 7.7 |
| 4 | 1.875 | 2.559 | 10.0 | 2.362 | 2.559 | 10.0 |
| 5 | 3.0 | 3.346 | 11.5 | 3.150 | 3.346 | 11.5 |
| 6 | 3.375 | 3.937 | 12.6 | 3.543 | 3.937 | 12.6 |

Fig. 6


COPYRIGHT © SULZER PUMPS FINLAND OY

SULZER

SPP id: 120601 / en / **N31798** / 1

# AHLSTAR

## PROCESS PUMPS

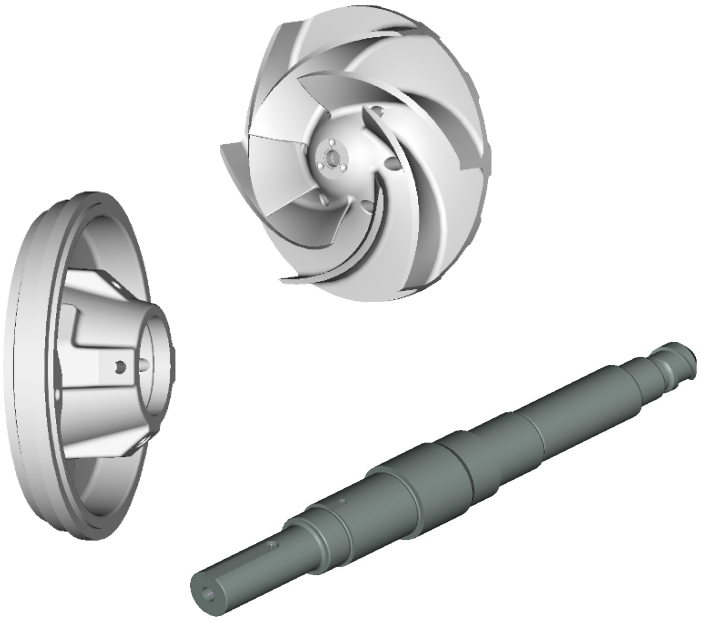

## Spare parts recommendation

## 1 Recommended spare parts


COPYRIGHT © SULZER PUMPS FINLAND OY

# 1 Recommended spare parts

To avoid long and expensive outages, we recommend that the following spare parts be kept in store preferably as spare part units, spare part kits and maintenance kits rather than as individual parts. The number of spare parts is evaluated for two year's use in normal operating conditions, Table 1 - Table 3.

## 1.1 Wet end

**Table 1, Spare parts recommendation**

| WEEN.1 | Wet end | Number of identical parts and units in various pumps | | | | | | | |
|---|---|---|---|---|---|---|---|---|---|
| | | 1 | 2 | 3 | 4 | 5 | 6<br>7 | 8<br>9 | ≥10 |
| | | Number of recommended spare parts | | | | | | | |
| | Spare part kit | 1 | 1 | 1 | 1 | 2 | 2 | 3 | 30 % |
| | Service kit | 2 | 4 | 6 | 8 | 8 | 9 | 12 | 150 % |
| 102.11 | Volute case | | | | | | | 1 | 10 % |
| 135.11 | Sideplate | 1 | 1 | 1 | 1 | 2 | 2 | 3 | 30 % |
| 230.11 | Impeller | 1 | 1 | 1 | 1 | 2 | 2 | 3 | 30 % |
| 502.11 | Casing wear ring | 1 | 2 | 2 | 2 | 3 | 3 | 4 | 50 % |
| 412 | O-rings | 2 | 4 | 6 | 8 | 8 | 9 | 10 | 100 % |
| Refer to the parts lists of the pumps when estimating the number of needed spare parts. | | | | | | | | | |

## 1.2 Sealing unit

**Table 2, Spare parts recommendation**

| SEUN.2 | Sealing unit | Number of identical parts and units in various pumps | | | | | | | |
|---|---|---|---|---|---|---|---|---|---|
| | | 1 | 2 | 3 | 4 | 5 | 6<br>7 | 8<br>9 | ≥10 |
| | | Number of recommended spare parts | | | | | | | |
| | Spare part kit | 1 | 2 | 3 | 4 | 5 | 6 | 7 | 90 % |
| | Service kit | 2 | 4 | 6 | 8 | 8 | 9 | 12 | 150 % |
| 100.21 | Case | | | | | | | 1 | 10 % |
| 161.21 | Case cover | | | | | | | 1 | 10 % |
| 231.21 | Suction impeller | 1 | 1 | 1 | 1 | 2 | 2 | 3 | 30 % |
| 400 | Gaskets | 2 | 4 | 6 | 8 | 8 | 9 | 12 | 150 % |
| 412 | O-rings | 2 | 4 | 6 | 8 | 8 | 9 | 10 | 100 % |
| 433.21 | Mechanical seal | 1 | 2 | 3 | 4 | 5 | 6 | 7 | 90 % |
| 435.21 | Static seal | 1 | 2 | 3 | 4 | 5 | 6 | 7 | 90 % |
| 451.21 | Stuffing box housing | | | | | | | 1 | 10 % |
| 452.21 | Stuffing box gland | | | | | | | 1 | 10 % |
| 456.21 | Neck bush | | | | | | | 1 | 10 % |
| 458.21 | Lantern ring | | | | | | | 1 | 10 % |
| 461.21 | Gland packing | | | | 24 | | | 32 | 400 % |
| 475.21 | Thrust ring | 1 | 2 | 3 | 4 | 5 | 6 | 7 | 90 % |
| 487.21 | Compressor ring | | | | | | | 1 | 10 % |
| 524.21 | Shaft wearing sleeve | 1 | 2 | 2 | 2 | 3 | 3 | 4 | 50 % |
| 542.21 | Throttle bushing | | | | | | | 1 | 10 % |
| 604.21 | Expeller | 1 | 1 | 1 | 1 | 2 | 2 | 3 | 30 % |
| Refer to the parts lists of the pumps when estimating the number of needed spare parts. | | | | | | | | | |


COPYRIGHT © SULZER PUMPS FINLAND OY

## 1.3 Bearing unit

**Table 3, Spare parts recommendation**

| BEUN.3 | Bearing unit | Number of identical parts and units in various pumps | | | | | | | |
|---|---|---|---|---|---|---|---|---|---|
| | | 1 | 2 | 3 | 4 | 5 | 6<br>7 | 8<br>9 | ≥10 |
| | | Number of recommended spare parts | | | | | | | |
| | Spare part kit | 1 | 1 | 1 | 2 | 2 | 3 | 4 | 50 % |
| | Service kit | 2 | 4 | 6 | 8 | 8 | 9 | 10 | 100 % |
| 183.31 | Support foot | | | | | | | 1 | 10 % |
| 210.31 | Shaft | 1 | 1 | 1 | 2 | 2 | 2 | 3 | 30 % |
| 320.31 | Antifriction bearing | 1 | 1 | 1 | 2 | 2 | 3 | 4 | 50 % |
| 320.32 | Antifriction bearing | | 2 | | 4 | | 6 | 8 | 50 % |
| 330.31 | Bearing housing | | | | | | | 1 | 10 % |
| 344.31 | Adapter | | | | | | | 1 | 10 % |
| 412 | O-rings | 2 | 4 | 6 | 8 | 8 | 9 | 10 | 100 % |
| 423 | Labyrinth ring | | | | | | | 1 | 10 % |
| 507.31 | Deflector | | 4 | | 8 | | 8 | 10 | 100 % |
| 923.31 | Bearing nut | 1 | 1 | 1 | 2 | 2 | 2 | 3 | 30 % |
| 931.31 | Lockwasher | 1 | 1 | 1 | 2 | 2 | 2 | 3 | 30 % |
| 940.31 | Key | 1 | 1 | 1 | 2 | 2 | 2 | 3 | 30 % |
| Refer to the parts lists of the pumps when estimating the number of needed spare parts. | | | | | | | | | |


COPYRIGHT © SULZER PUMPS FINLAND OY

# Scope of Supply

| | | | |
|---|---|---|---|
| Customer | SUEZ Water Technologies & Solutions Canada | Sulzer Reference ID | CAN.9575-YYZ.20.9575-F0 |
| Project Name | | Inquiry Date | |
| Inquiry Number/ID | | Bid Submitted Date | |
| Item number | 004 | Date Last Saved | 03 Sep 2020 4:15 PM |
| Application | Not specified | Type / Size / Stages | APT21-3 (O) / 1 |
| Pump speed | 1130 rpm | | |

# Pump and Accessories

| Qty | Description |
|---|---|
| *1* | *APT21-3 (O)* |
| | End suction single stage centrifugal pump |
| | Quality Requirement |
| | CE 2006/42/EC |
| | EN ISO 5199:2002 Class II |
| | **Pump and accessories** |
| | **Hydraulic performance acceptance grade** |
| | Guaranteed efficiency |
| | **Impeller** |
| | Impeller type: Open |
| | Impeller holes: Balance holes |
| | **Materials of construction** |
| 1 | Volute case : Grey cast iron (ASTM A48 CL35B) |
| | Impeller : Duplex steel (ASTM A890 3A) |
| | Wetted non casted alloys: 316 SS or better grade |
| | Shaft: Duplex steel (EN1.4460 / AISI 329 / SS2324) |
| | Bearing housing : Grey cast iron (ASTM A48 CL30B) |
| | **Surface treatment** |
| | Inside surface treatment: Standard |
| | Painting method: Standard, atmospheric-corrosivity C4, ISO 12944-2 |
| | Color shade: Light grey (NCS1700) |
| | **Volute case** |
| | Flange drilling : ASME B16.1 CLASS 125 |
| | Casing Connections |
| | Casing Drain |
| | Recirculation Pipe (Discharge) |
| | **Shaft seal** |
| | Sealing unit type: Cartridge single, open seal chamber, sleeve installation (MS33) |
| | Shaft seal fluid: Without fluid (N) |
| 1 | Mechanical seal type: John Crane, 5610 (FC16) |
| | Mechanical seal body: 316/329 SS |
| | Shaft seal material: SiC/ SiC |
| | Mechanical seal elastomer material: EPDM, Ethylene propylene |
| | **Bearing unit** |
| | Bearing lubrication type: Oil bath |
| | Bearing isolation: Standard labyrinth seal |
| | **Other parts** |
| | O-ring material: EPDM, Ethylene propylene |
| | Gasket material: REINZ AFM 34 |
| | Shaft seal guards material: Stainless steel |
| | **Coupling** |
| | Coupling service factor: 1.20 |
| 1 | Coupling size : Rex Viva VS110 |
| 1 | Coupling guard : Painted galvanized steel |
| | Coupling guard colour shade: Yellow (RAL1023) |

## Pump and Accessories

| Qty | Description |
|---|---|
| | **Baseplate** |
| 1 | Baseplate type: Standard baseplate for pump and motor (SLP) |
| | Baseplate material: Carbon steel |
| | Baseplate equipment: Foundation screw, Grouted |
| | Baseplate surface treatment: Hot galvanizing |
| | **Packing** |
| | Packing type: Standard domestic packaging (wooden skid) |
| | Product protection |
| | Plug for connections |
| | Board cover for flanges |

## Driver

| Qty | Description |
|---|---|
| | **Motor** |
| 1 | Motor detail: (SIEMENS/BALDOR/WEG/MARATHON) Severe duty 6 poles 2HP TEFC 184T 575V Foot-mounted |

## No Group

| Qty | Description |
|---|---|
| 1 | Motor mounting |

# Pump Performance Datasheet

| | | | |
|---|---|---|---|
| Customer | : SUEZ Water Technologies & Solutions Canada | Sulzer Reference ID | : CAN.9575-YYZ.20.9575-F0 |
| Inquiry Number/ID | : | Type / Size | : APT21-3 (O) |
| Item number | : 004 | Stages | : 1 |
| Service | : | Based on curve number | : APP21-80_1200_O Rev 1 |
| Quantity | : 1 | Date of Last Update | : 03 Sep 2020 4:15 PM |

## Operating Conditions

| | |
|---|---|
| Flow, rated | : 180.0 USgpm |
| Differential head / pressure, rated (requested) | : 18.00 ft |
| Suction pressure, rated / max | : 0.00 / 0.00 psi.g |
| NPSH available, rated | : Ample |
| Site Supply Frequency | : 60 Hz |

## Performance

| | |
|---|---|
| Speed criteria | : Synchronous |
| Speed, rated | : 1130 rpm |
| Impeller diameter, rated | : 7.28 in |
| Impeller diameter, maximum | : 8.27 in |
| Impeller diameter, minimum | : 6.69 in |
| Efficiency | : 62.76 % |
| NPSH (3% head drop) / margin required | : 3.92 / 0.00 ft |
| Ns (imp. eye flow) / Nss (imp. eye flow) | : 1,964 / 6,765 US Units |
| MCSF | : 69.55 USgpm |
| Head, maximum, rated diameter | : 20.34 ft |
| Head rise to shutoff | : 13.01 % |
| Flow, best eff. point | : 269.8 USgpm |
| Flow ratio, rated / BEP | : 66.72 % |
| Diameter ratio (rated / max) | : 88.10 % |
| Head ratio (rated dia / max dia) | : 70.01 % |
| Cq/Ch/Ce/Cn [ANSI/HI 9.6.7-2010] | : 1.00 / 1.00 / 1.00 / 1.00 |
| Selection status | : Acceptable |

## Liquid

| | |
|---|---|
| Liquid type | : Water |
| Additional liquid description | : |
| Solids diameter, max | : 0.00 in |
| Solids concentration, by volume | : 0.00 % |
| Temperature, rated / max | : 68.00 / 68.00 deg F |
| Fluid density, rated / max | : 1.000 / 1.000 SG |
| Viscosity, rated | : 1.00 cP |
| Vapor pressure, rated | : 0.34 psi.a |

## Material

| | |
|---|---|
| Material selected | : Cast Iron - ASTM A48 CL35B (53 / F0067) |

## Pressure Data

| | |
|---|---|
| Maximum casing/bowl working pressure | : 8.80 psi.g |
| Maximum allowable working pressure | : 145.0 psi.g |
| Maximum allowable suction pressure | : N/A |
| Hydrostatic test pressure | : 217.6 psi.g |

## Driver & Power Data (@Max density)

| | |
|---|---|
| Driver sizing specification | : Rated power |
| Margin over specification | : 0.00 % |
| Service factor | : 1.00 |
| Power, hydraulic | : 0.82 hp |
| Power, rated | : 1.30 hp |
| Power, maximum, rated diameter | : 1.61 hp |
| Minimum recommended motor rating | : 1.50 hp / 1.12 kW |

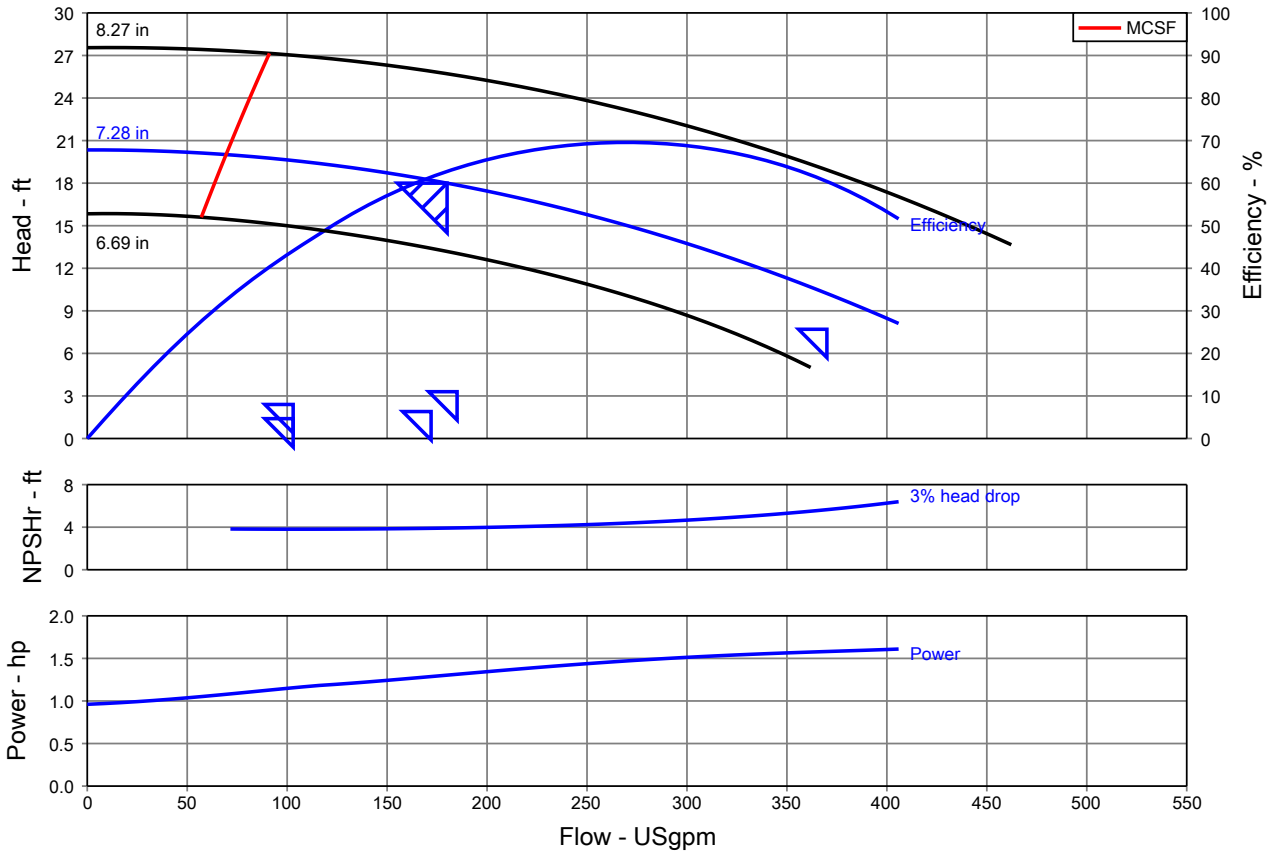

SULZER

# Multi-Speed Performance Curve

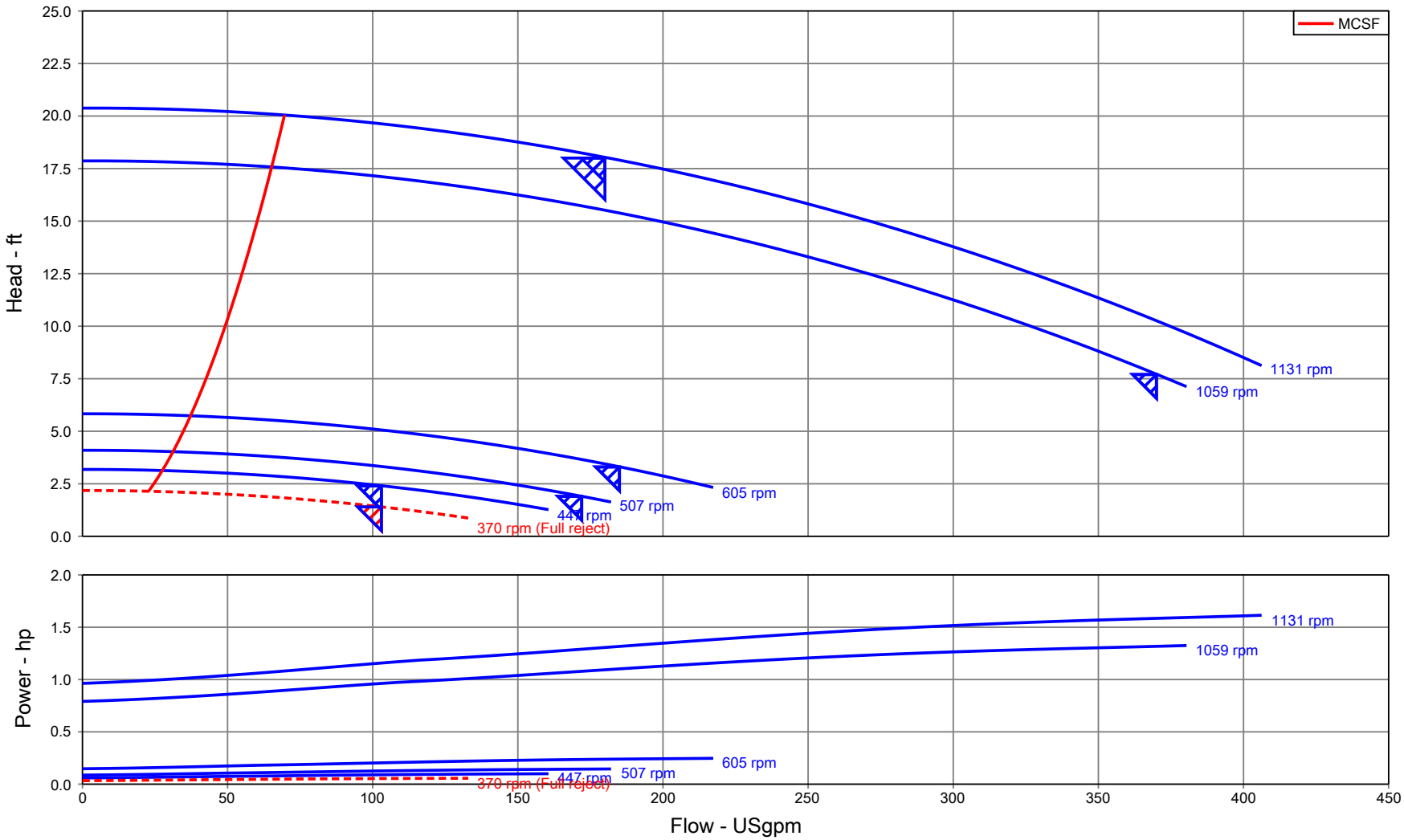


| | | | | | |
|---|---|---|---|---|---|
| Customer | : SUEZ Water Technologies & Solutions Canada | Stages | : 1 | Nominal speed | : 1160 rpm |
| Inquiry Number/ID | : | Based on curve number | : APP21-80_1200_O Rev 1 | Flow, rated | : 180.0 USgpm |
| Item number | : 004 | Efficiency | : 62.76 % | Differential head / pressure, rated | : 18.00 ft |
| Service | : | Power, rated | : 1.30 hp | Speed, rated | : 1130 rpm |
| Quantity | : 1 | NPSH (3% head drop) | : 3.92 ft | Impeller diameter, rated | : 7.28 in |
| Sulzer Reference ID | : CAN.9575-YYZ.20.9575-F0 | Site Supply Frequency | : 60 Hz | Fluid density, rated / max | : 1.000 / 1.000 SG |
| Date of Last Update | : 03 Sep 2020 4:15 PM | | | Viscosity, rated | : 1.00 cP |
| Type / Size | : APT21-3 (O) | | | Cq/Ch/Ce/Cn [ANSI/HI 9.6.7-2010] | : 1.00 / 1.00 / 1.00 / 1.00 |

Dimensions in inches - NOTE: DO NOT USE FOR CONSTRUCTION UNLESS CERTIFIED

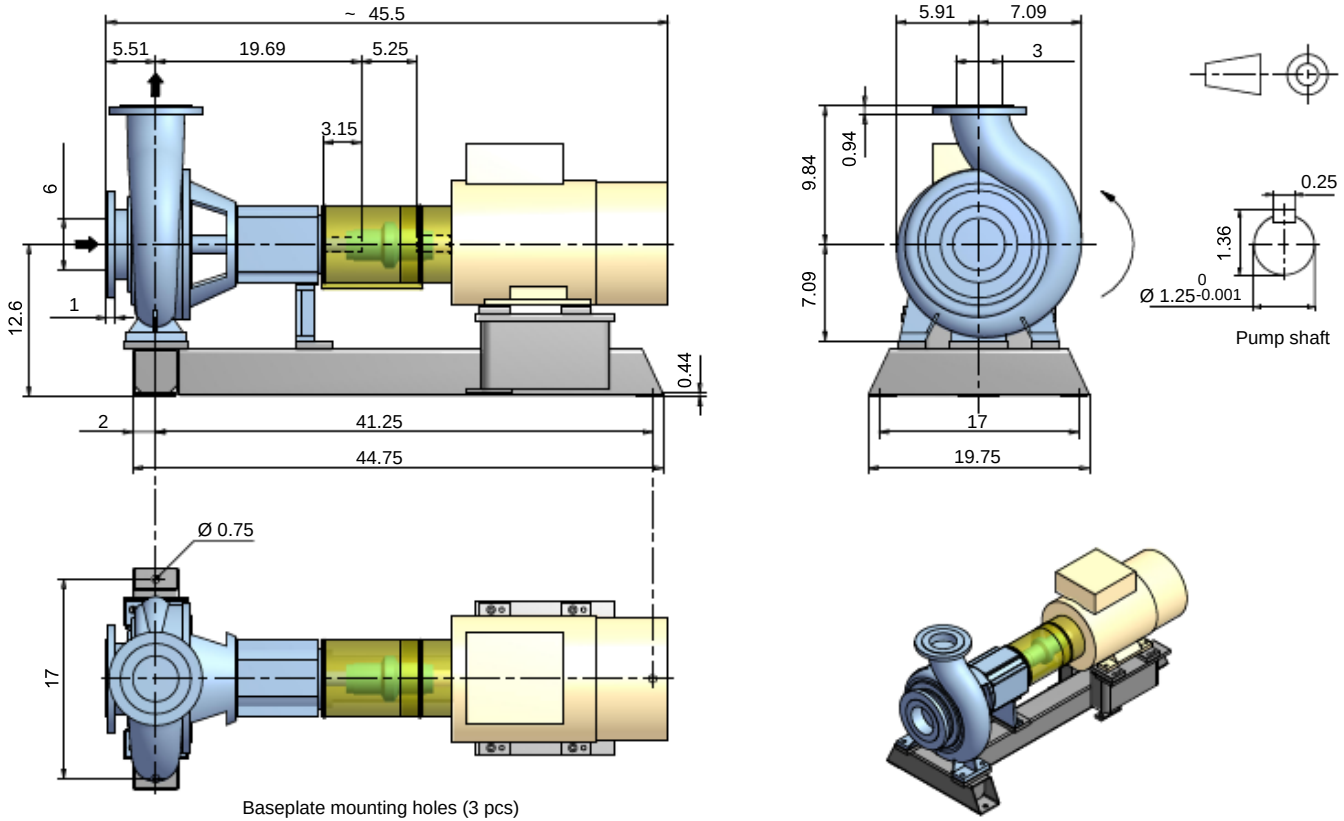


MOTOR INFORMATION

| | |
|---|---|
| Power | 2 HP |
| Frame size | 184T |
| Synchronous speed | 1200 rpm |
| Voltage | 575V |
| Frequency | 60 Hz |
| Enclosure | TEFC |

PUMP INFORMATION

| | |
|---|---|
| Rated speed | 1130 rpm |
| Pump Size | APT21-3 (O) |
| No. of Stages | 1 |

WEIGHTS

| | |
|---|---|
| Pump | 220.0 lb |
| Baseplate | 110.0 lb |
| Motor | 122.0 lb |
| TOTAL | 452.0 lb |

FLANGES

| | Size | Drilling |
|---|---|---|
| Suction Flange | NPS6 | 125# |
| Discharge Flange | NPS3 | 125# |
| | | |
| | | |

TENDER SUMMARY

| | |
|---|---|
| Sulzer Reference ID | CAN.9575-YYZ.20.9575-F0 |
| Project name | |
| Customer | SUEZ Water Technologies & Solutions Canada |
| Inquiry Number/ID | |
| Item number | 004 |
| Date Last Saved | 2020-09-03 13:53:22 |
| Service | |

SULZER

General Arrangement Drawing

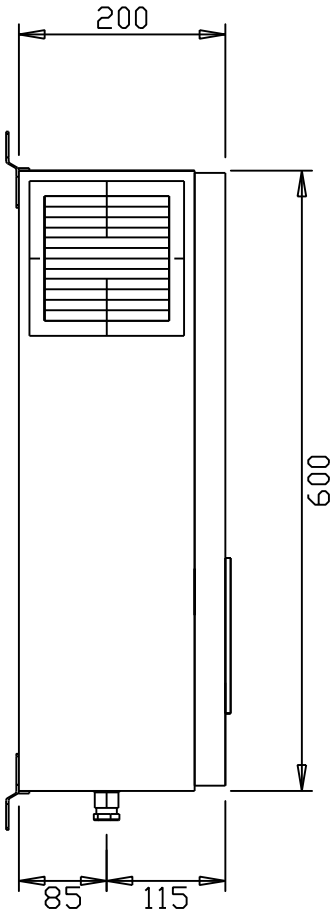


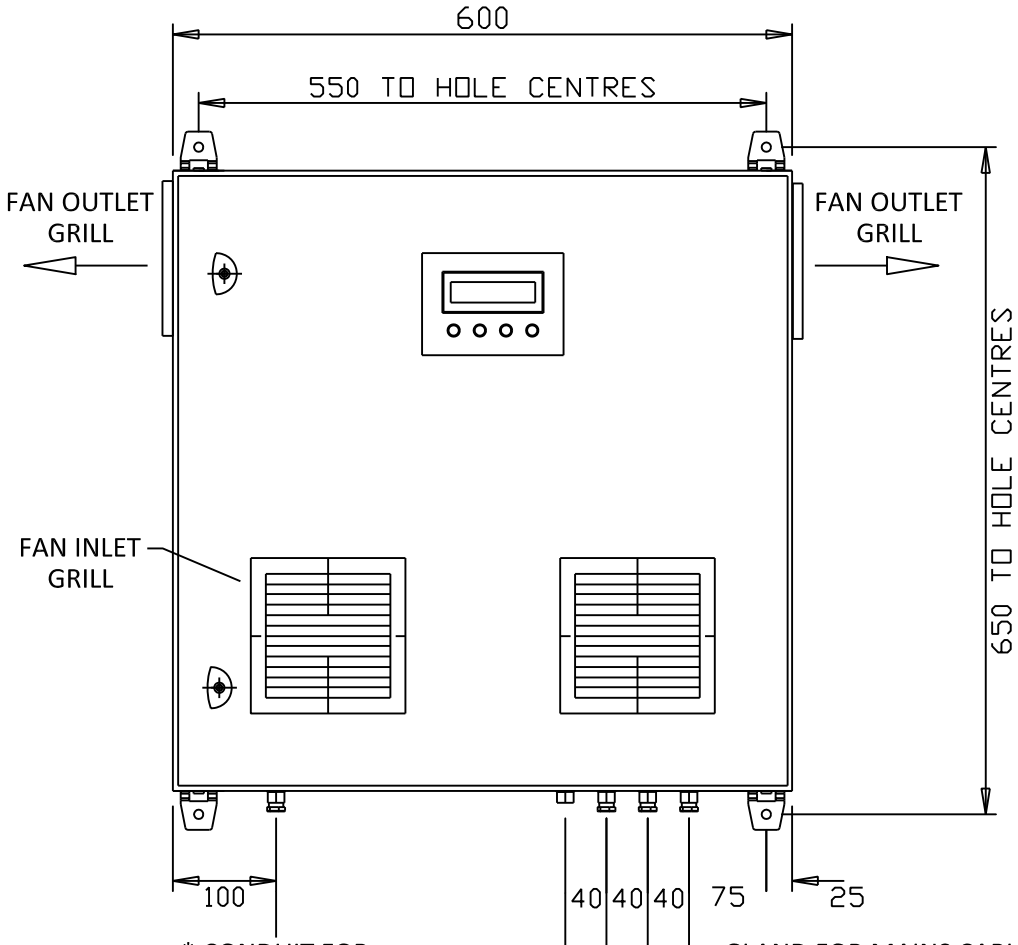


PANEL TYPE: WALL MOUNTED
PROTECTION:IP54 (~NEMA 12) (WITH GRILL FILTER MATS FITTED)
PANEL MATERIAL: ENCLOSURE 1.5mm, DOOR 2.0mm SHEET STEEL
FINISH: GREY RAL 7035 TEXTURE FINISH
MAX WEIGHT: 37kg (6 LAMP PANEL)
POWER CONSUMPTION: SLP3 - 0.68kVA at pf ~ 0.95
SLP4 - 0.88kVA at pf ~ 0.95
SLP6 - 1.29kVA at pf ~ 0.95
(ALL POWERS INCREASE BY 0.1kVA
WHEN WIPER OPTION IS ADDED)

* NOTE: ALL CABLES 10m LONG AS STANDARD, UPTO 20m POSSIBLE AS OPTION

| ISSUE | REVISION | BY | DATE |
|---|---|---|---|
| | | | |
| | | | |
| | | | |
| | | | |

© THIS DRAWING MUST NOT BE REPRODUCED IN WHOLE OR PART WITHOUT WRITTEN PERMISION

TRIOGEN LTD
CRAIGTON, GLASGOW, G52 1BD
SCOTLAND
TEL: +44 (0) 141 810 4861
FAX: +44 (0) 141 810 5561

TITLE: LAYOUT OF CONTROL PANEL MODEL: SLPC3, SLPC4 & SLPC6

| DRAWN BY: | CHECKED BY: | DATE: | |
|---|---|---|---|
| KMCH | | 16/06/09 | |
| DRAWING No. | | SHEET | REV |
| UD332 | | 1 | - |

# UV Dose Calculation
# SUEZ Aquaray SLP200-4 (4 Lamp reactor)

## System Design Parameters

| | | |
|---|---|---|
| Design Dose Value ($mJ/cm^2$) | | 40 |
| Plant Peak Flow Rate ($m^3/hr$) | $Q_P$= | 28.6 |
| Plant Peak Flow Rate (mgd) | | 0.18 |
| Number of Parallel Trains | $N_T$= | 1 |
| Number of Redundant Train(s) | $N_R$= | 0 |
| Number of Reactor in Series | B= | 1 |
| Apply Redundant Train towards Disinfection (Yes/No) | | No |
| UV254 Transmittance (%) | $UVT_{254}$= | 75 |

| | | |
|---|---|---|
| Ballast Electrical Power (Watts) | P= | 205 |
| Lamp + Ballast Electrical Efficacy (%) | ε= | 31.71 |
| EOL Factor | Fp= | 0.8 |
| Percent UV Output (%) | UV= | 100 |
| Fouling Factor | Ft= | 0.9 |

### Flow per Train

| | | |
|---|---|---|
| Qtrain= | 28.62 | $m^3/h$ |
| | 0.18 | mgd |

### Inlet/Outlet Velocity

| | | |
|---|---|---|
| Velocity= | 0.45 | m/sec |
| | 1.48 | ft/sec |

### Internal Velocity

| | | |
|---|---|---|
| Velocity= | 0.34 | m/sec |
| | 1.11 | ft/sec |

### Calculated UV Dose

| | | |
|---|---|---|
| Dose= | 63.3 | $mJ/cm^2$ |

**Design Dose Safely Achieved**

### Maximum Head loss per Reactor Train

| | | |
|---|---|---|
| Branch ID= | 150 | mm |
| | 5.91 | inch |
| HL= | 1.45 | cm |

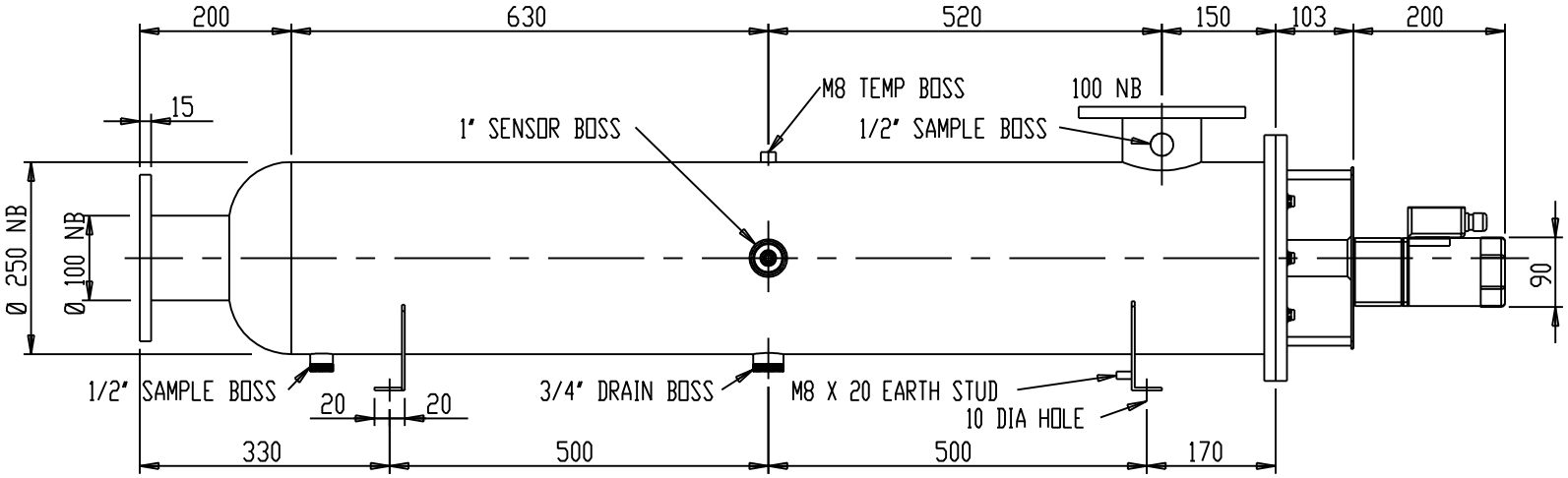


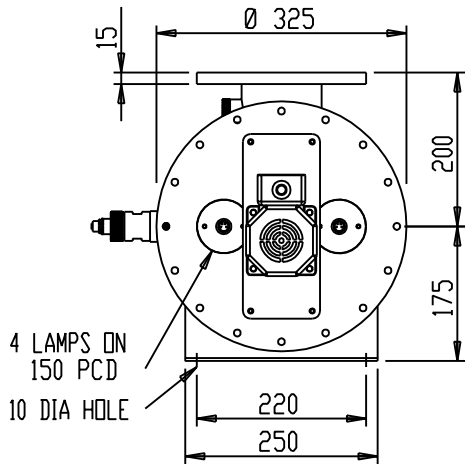


VIEW OF SUPPORT FOOT

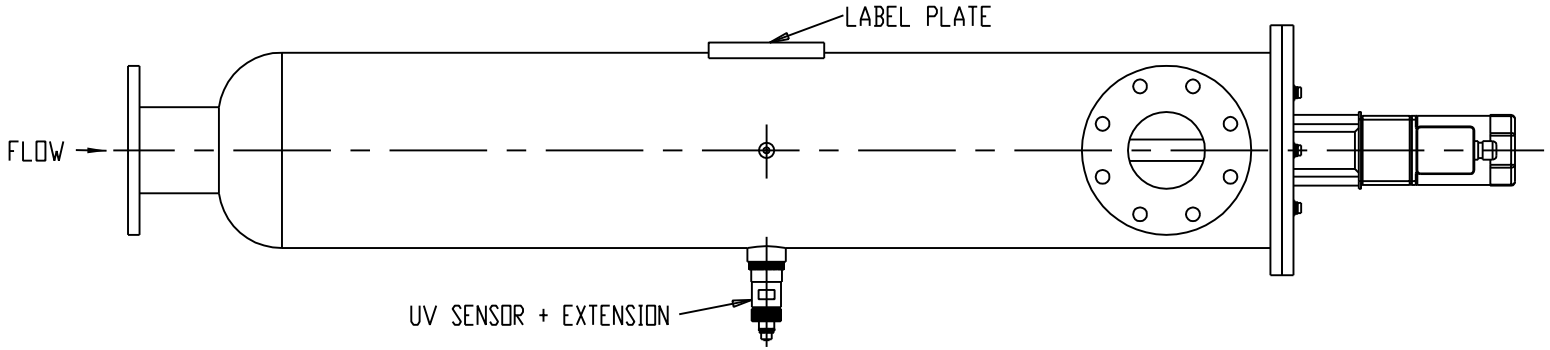


BRANCH CONNECTION
FLANGE OPTION

| |
|---|
| FLANGE BS4504 NP10 FF |
| FLANGE O.D. - 220 |
| FLANGE PCD - 180 |
| HOLE DIA - 18 |
| HOLE NUMBER - 8 |
| HOLES OFF CENTRES |

OR

| |
|---|
| FLANGE ANSI 150 FF |
| FLANGE O.D. - 9" |
| FLANGE PCD - 7 1/2" |
| HOLE DIA - 3/4" |
| HOLE NUMBER - 8 |
| HOLES OFF CENTRES |

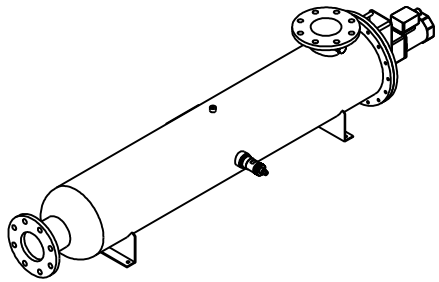

REACTOR MATERIAL: 316L STAINLESS STEEL
LAMP TYPE: 205 AMALGAM

| ISSUE | REVISION | BY | DATE |
|---|---|---|---|
| A | 1/2" BOSSES ADDED + M8 EARTH STUD | JJW | 22/10/08 |
| B | COMPLETE REDRAW IN SOLIDWORKS | KMCH | 25/02/09 |

© THIS DRAWING MUST NOT BE REPRODUCED IN WHOLE OR PART WITHOUT WRITTEN PERMISION

TRIOGEN LTD
CRAIGTON, GLASGOW, G52 1BD
SCOTLAND
TEL: +44 (0) 141 810 4861
FAX: +44 (0) 141 810 5561

| TITLE: | DRAWN BY: | CHECKED BY: | DATE: |
|---|---|---|---|
| LAYOUT OF REACTOR MODEL SLP250-100-4W WITH WIPER | KMCH | | 25/02/09 |
| | DRAWING No. | SHEET | REV |
| | UD268 (SW) | 1 | B |

# AQUARAY® SLP-WW

## UV Systems

UV

**Aquaray® SLP-WW UV Systems offer compact and high-efficiency disinfection for small and medium wastewater plants with flow rates from 10 to 200m³/h with exceptional reliability and ease of operation.**

## APPLICATIONS

- **Wastewater Disinfection**
- **Wastewater Reuse**
- **Grey Water**
- **Camp Grounds**
- **Hotels, Hospitals**
- **Restaurants**
- **Marine**

## MAIN CHARACTERISTICS

- **Low Pressure High Output Amalgam Lamps**
- **"L" design reactor (in-line water inlet)**
- **Calibrated UV sensor**
- **Simple control logic**
- **Temperature sensor**

## MAIN FEATURES

- High efficiency reactor with in-line water inlet
- Exceptional lamp life of 16 000 h
- User friendly operator interface microprocessor controlled
- Easy to install in new or existing water plants
- Automatic wiper system
- Horizontal reactor mounting
- Flow pacing and other control features

## UV TECHNOLOGY : SLP-WW

Aquaray® SLP-WW UV systems provide reliable protection against biological contaminants commonly found in wastewater. The germicidal effect of the UV light inactivates most micro-organisms such as bacteria, viruses and parasites to allow safe discharge or reuse.

The UV dose (UV Intensity x contact time) defines the treatment efficiency which is provided by the unit. The effective dose applied depends on the UV transmittance of water to be treated as well as the proper hydraulic design of the unit. All the Aquaray® SLP-WW units are CFD modeled to ensure accurate flow distribution and minimize head loss.

## HOW IT WORKS

The low pressure amalgam lamps are powered by electronic ballasts. The lamps are inserted in pure quartz sleeves isolating them from the water. The lamps can be easily changed when necessary. The micro-processor control unit indicates lamp operating hours and notifies the operator when the usable life (16 000 hours) is reached.
A UV sensor is installed to monitor UV intensity.

The periodic maintenance of the system has been made very easy by allowing the removal of the full lamp assembly.

The reactor is fitted with an automatic wiper system for cleaning the UV lamp quartz sleeves.

## PRODUCT HIGHLIGHTS

> Exceptional Lamp life of 16 000 h

> User friendly operator interface

> Automatic wiper system

OZONIA

OZONIA UV

| TECHNICAL DATA SLP MODEL | Flow Rate (1) ($m^3/h$) | Total Lamp Power (W) | Reactor (mm) | | | | | | | | | | | | | In-Out | Control Panel: L x H x W (mm) |
|---|---|---|---|---|---|---|---|---|---|---|---|---|---|---|---|---|---|
| | | | A | B | C | D | E | F | G | H | J | K | L | M | N | | |
| SLP 150-50-1 W | 10 | 200 | 150 | 1250 | 150 | 150 | 225 | 230 | 185 | 1000 | 120 | 150 | 125 | 300 | 1375 | DN 50 | 400 x 600 x 200 |
| SLP 200-75-2 W | 19 | 400 | 200 | 1250 | 150 | 175 | 275 | 230 | 185 | 1000 | 170 | 200 | 150 | 300 | 1375 | DN 80 | 400 x 600 x 200 |
| SLP 200-75-3 W | 29 | 600 | 200 | 1250 | 150 | 175 | 275 | 230 | 185 | 1000 | 170 | 200 | 150 | 300 | 1375 | DN 80 | 600 x 600 x 200 |
| SLP 250-100-4 W | 38 | 800 | 250 | 1350 | 150 | 200 | 325 | 330 | 185 | 1000 | 220 | 250 | 175 | 300 | 1375 | DN 100 | 600 x 600 x 200 |
| SLP 250-150-6 W | 58 | 1200 | 250 | 1350 | 150 | 200 | 325 | 330 | 185 | 1000 | 220 | 250 | 175 | 300 | 1375 | DN 150 | 600 x 600 x 200 |
| SLP 300-150-8 W | 78 | 1600 | 300 | 1330 | 170 | 250 | 375 | 330 | 185 | 1000 | 270 | 300 | 200 | 300 | 1375 | DN 150 | 800 x 800 x 200 |
| SLP 350-150-10 W | 93 | 2000 | 300 | 1330 | 170 | 250 | 375 | 330 | 185 | 1000 | 270 | 300 | 200 | 300 | 1375 | DN 150 | 800 x 800 x 200 |
| SLP 350-150-12 W | 115 | 2400 | 350 | 1300 | 200 | 300 | 475 | 330 | 185 | 1000 | 320 | 350 | 250 | 300 | 1375 | DN 150 | 800 x 800 x 200 |
| SLP 400-200-14 W | 140 | 2800 | 400 | 1300 | 200 | 300 | 475 | 330 | 185 | 1000 | 370 | 400 | 250 | 300 | 1375 | DN 200 | 800 x 800 x 200 |
| SLP 500-200-20 W | 200 | 4000 | 500 | 1750 | 250 | 375 | 650 | 450 | 170 | 1400 | 250 | 300 | 325 | 300 | 1600 | DN 200 | 1000 x 800 x 200 |

Size connection flanges confirmed with proposal
(1) Based on 35 mJ/cm² UV dose at 65% UV transmittance
W = Wiper

## TECHNICAL FEATURES

- Flanges: BS 4504 (PN10), or ANSI 150
- Reactor Pressure Rating: 10 barg
- Main Power Supply: 220-240V/1ph/50-60 Hz
- Panel Rating: IP54
- Conformity: CE

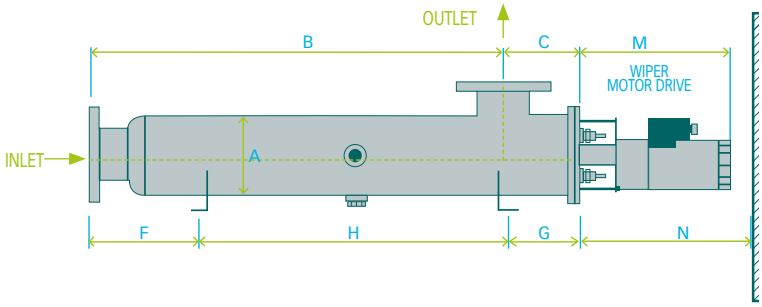


## MATERIALS

- Reactor Material: 316L stainless steel/quartz sleeve/silicon O-ring
- Panel Material: mild steel polyester powder coated

## OPTIONS

- Stainless steel panel
- Vertical mounting

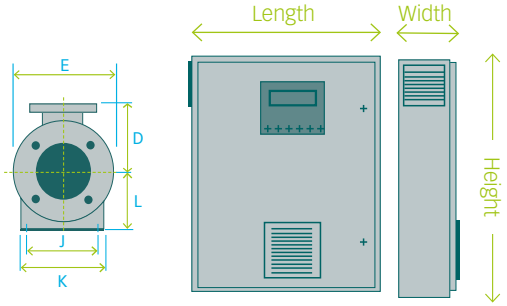


## REMOTE CONTROL AND ALARMS

- Digital Inputs: lamp start-stop, water flow interlock
- Digital Outputs: system status, pre-alarm, system fault
- Analogue Output: remote indication of UV intensity

## CONTACTS


| | | |
|---|---|---|
| OZONIA Switzerland | salesCH@ozonia.com | +41 44 801 85 11 |
| OZONIA North America | sales@ozonia.com | +1 201 676 2525 |
| OZONIA France | salesFR@ozonia.com | +33 1 46 25 66 40 |
| OZONIA Russia | salesRU@ozonia.com | +7 831 434 16 28 |
| OZONIA China | salesCN@ozonia.com | +86 10 6597 3860 |
| OZONIA Korea | salesKR@ozonia.com | +82 31 701 9036 |
| OZONIA Japan | salesJP@ozonia.com | +81 3 5444 6361 |


Your local distributor:

© 2011 Degrémont Technologies Ltd. • Subject to change without notice. • www.ozonia.com

SUEZ Water UK

# triogen® UV SLP

## LOW PRESSURE UV SYSTEMS FOR WATER TREATMENT

## OPERATION & MAINTENANCE INSTRUCTIONS

MANUAL ISSUE No 19, JULY 2018

SUEZ Purification & Disinfection Systems Ltd - Manufacturer of triogen® products
14 Langlands Place - Kelvin South Business Park, East Kilbride G75 0YF - SCOTLAND - UNITED KINGDOM | www.suezwater.co.uk - www.triogen.com.
Registered in Scotland – No. SC120472

**Revision:**

| Issue | Date | Modified by | Changes |
|---|---|---|---|
| 11 | 17/3/2014 | MMK | Updated sound intensity level on environmental data. |
| 12 | 27/10/2014 | RH | Spare parts list, operation details and CE cert amended |
| 13 | 24/05/2016 | NA | Updated Brand details |
| 14 | 29/07/2016 | AH | Rubber Gasket Detail added<br>CE Certificate updated |
| 15 | 08/11/2016 | AH | SUEZ branding and company name updated |
| 16 | 23/02/2017 | GGB | Updated Parts List with Correct Lamp Part No.'s Section 9.2 & 9.1 |
| 17 | 01/03/2018 | PAS | SLP reactor images updated |
| 18 | 15/03/2018 | PAS | Added Titanium Option to manual |
| 19 | 13/07/2018 | PAS | Added maximum water pressure for Titanium |
| | | | |
| | | | |
| | | | |

# Captions

The following is a description of the symbols and pictograms which are used in these operating instructions:

ATTENTION:

*Prohibited actions and procedures.*

WARNING/INSTRUCTION:

*Warning of danger. General warning that special attention should be paid. Important instruction that must be followed.*

WARNING:

*Voltage or high voltage: Dangerous for persons or household pets. The valid regulations and accident prevention measures must be strictly adhered to.*

WARNING:

*Dangerous situation. Serious injury or death can result. The product or its surrounding can be damaged.*

INFORMATION:

*Information and instructions that must also be followed.*

IMPORTANT:

*Measures recommended by SUEZ Purification and Disinfection Systems Ltd.*

Contents


1. Introduction ..... 5
2. Equipment Description ..... 6
   2.1 General ..... 6
   2.2 Technical Data ..... 9
   2.3 Electrical & Environmental Data ..... 10
3. Safety Measures and Regulations ..... 12
   3.1 Electricity ..... 13
   3.2 Mechanical Dangers ..... 13
   3.3 Exposure to High Intensity UV Light ..... 13
4. Installation Guidance ..... 14
   4.1 Installing the UV System ..... 14
   4.2 Mechanical Connection ..... 15
   4.3 Electrical Connection ..... 15
5. Commissioning ..... 17
   5.1 Commissioning Preparation ..... 17
   5.2 Checking the Installation ..... 17
   5.3 Commissioning the System ..... 18
6. Operation ..... 22
   6.1 Starting-Stopping the UV Lamp(s) ..... 22
   6.2 System Control ..... 23
   6.3 Wiper Control ..... 24
   6.4 Time Clock ..... 26
   6.5 Hours Run ..... 26
   6.6 Language ..... 27
   6.7 UV Intensity ..... 28
   6.8 UV Sensor Calibration ..... 29
   6.9 Operating Values ..... 30
   6.10 Temp Alarm Settings ..... 31
   6.11 UV Alarm Settings ..... 31
   6.12 Spare Parts List ..... 32
7. Maintenance ..... 33
   7.1 Replacing the UV lamp(s) ..... 33
   7.2 Replacing the UV lamp thimble(s). ..... 35

7.3 Replacing the thimble wiper ring(s) ... 37
7.4 Inspecting the wiper drive mechanism. ... 39
7.5 Replacing the Control Panel filter mat. ... 41
7.6 Quartz surfaces cleaning ... 41
7.7 UV intensity calibration ... 44
8. Fault Finding ... 46
8.1 Loss of all Indications ... 46
8.2 Fault Indication – Lamp x Fault ... 46
8.3 Fault Indication – Panel High Temp ... 47
8.4 Fault Indication- Reactor High Temp ... 48
8.5 Fault indication- Wiper Fault ... 49
8.6 Fault Indication- Low UV Intensity ... 49
8.7 Warning Indication- Yellow Backlight (UV Intensity Pre-alarm) ... 50
8.8 Warning indication- Lamp Change in xxxHr ... 51
8.9 Warning indication- Lamp Change Required ... 51
9. Spare Parts ... 52
9.1 Reactor spare parts triogen® UV SLP 1-14 ... 52
9.2 Reactor spare parts triogen® UV SLP 20 ... 53
10. Warranty ... 54
11. Disposal ... 55
12. CE Conformity ... 56

# 1. Introduction

This manual is for the following models of Low Pressure UV systems.

**triogen® UV SLP150-1**
**triogen® UV SLP200-2**
**triogen® UV SLP200-3**
**triogen® UV SLP250-4**
**triogen® UV SLP250-6**
**triogen® UV SLP300-8**
**triogen® UV SLP350-10**
**triogen® UV SLP350-12**
**triogen® UV SLP400-14**
**triogen® UV SLP500-20**

These operating instructions contain important information for the operation and maintenance of the equipment.

Please ensure that these operating instructions are carefully read by all relevant persons before putting into operation, to ensure the safe use of the UV system. The operating instructions are an integral part of the equipment supply.

Before putting into operation, all the conditions necessary for safe operation of the equipment must be fulfilled. Please refer to Section 3 “Safety Measures and Regulations”.

The installation, commissioning and maintenance of the equipment should only be carried out by qualified personnel.

The equipment should only be operated by authorized personnel who have been trained accordingly.

No modifications should be made to the equipment without consulting the manufacturer, as this could affect the safe operation of the unit.

The manufacturer shall not be held responsible for damage resulting from unapproved modifications.

INSTRUCTION:

*The operating instructions are to be kept where they will be accessible for operating and maintenance personnel.*

# 2. Equipment Description

## 2.1 General

The LP range of UV systems have been specifically designed for use in various water treatment applications.

Each system comprises of a UV reactor and electrical control panel with interconnecting cabling

TYPICAL SLP MODEL triogen® UV SLP250-150-2

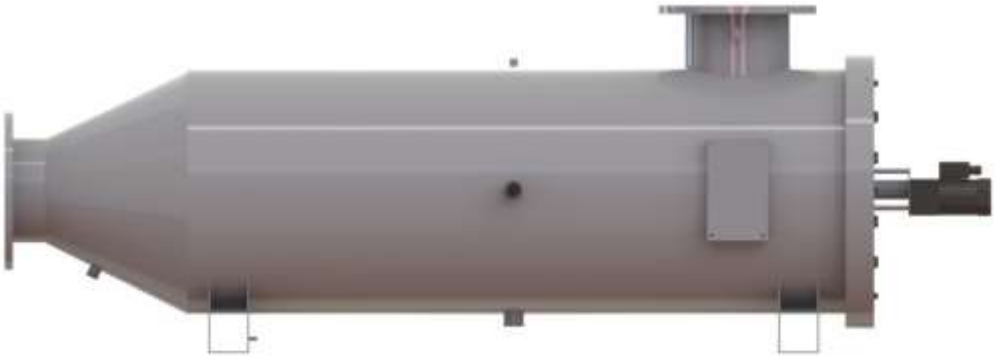

triogen® UV SLP600-200-20W

A UV monitor is fitted as standard and option of a fully automatic wiper system is available depending on the type of application and media being treated

The reactor vessel is manufactured from 316 Stainless Steel materials (optional titanium reactor vessel is available) and consists of connection flanges, lamps & thimbles

Each reactor is supplied with a wall mountable electrical control panel incorporating a microprocessor control system.

TYPICAL triogen® UV SLP1-3 CONTROL PANEL

TYPICAL triogen® UV SLP4-6 CONTROL PANEL

TYPICAL triogen® UV SLP8-14 CONTROL PANEL

TYPICAL triogen® UV SLP500-300-20W CONTROL PANEL

INFORMATION:

*An optional IP65 rated panel is available for the 1 to 8 lamp range. Details not shown*

## 2.2 Technical Data

Panel Details

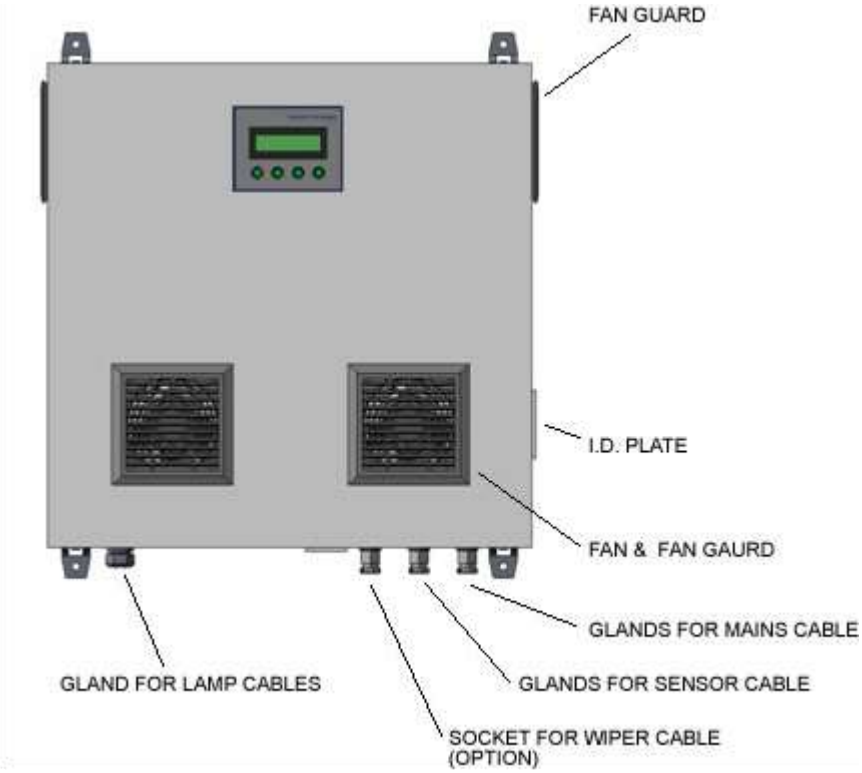


The drawing shows a typical panel (3 to 6 lamp). The lamp cables are supplied as standard 10m long to allow connection to the reactor.

The panel paint finish is grey (RAL7035) epoxy polyester powder coated.

The panel dimensions are as follows:

| triogen® UV Model | Length (mm) | Height (mm) | Depth (mm) | Weight (max kg) |
|---|---|---|---|---|
| SLPC1-2 | 600 | 400 | 200 | 26 |
| SLPC3-6 | 600 | 600 | 200 | 34 |
| SLPC8-14 | 800 | 800 | 200 | 54 |
| SLPC20 | 1000 | 800 | 200 | 76 |

*Dimensions of the IP 65 models not shown

Reactor Details

## 2.3 Electrical & Environmental Data

**Environmental conditions:**

| | | |
|---|---|---|
| Ambient temperature for operation | 5...40 | °C |
| Ambient temperature for transport and storage | -25...+55 | °C |
| Annual average air humidity<br>- for 60 continuous days a year<br>- occasionally | ≤65<br>85<br>95 | %<br>%<br>% |
| Condensation/aggressive environment | to be avoided | |
| Protection class for installation | IP 54<br>IP 65 (Optional) | |
| Vibration/Shock | Install in a vibration-free environment | |
| Sound intensity level | ≤60 | dB(A) |

**Operational conditions:**

| | | |
|---|---|---|
| Stainless steel Maximum water pressure | 0 … 10 | bar g |
| Titanium Maximum water pressure | 0 … 6 | bar g |
| Inlet water temperature | 2 … 40 | °C |
| Maximum Chloride content of water | 500 | mg/l |

**Electrical data:**

| | | |
|---|---|---|
| Line power consumption | triogen® UV SLP150-1 = 0.25<br>triogen® UV SLP200-2 = 0.45<br>triogen® UV SLP200-3 = 0.68<br>triogen® UV SLP250-4 = 0.88<br>triogen® UV SLP250-6 = 1.29<br>triogen® UV SLP300-8 = 1.72<br>triogen® UV SLP350-10 = 2.13<br>triogen® UV SLP350-12 = 2.56<br>triogen® UV SLP400-14 = 2.97<br>triogen® UV SLP500-20 = 4.24<br>All powers increase by 0.1kVA when the wiper option is included. | kVA |
| Line power factor | ~0.95 lagging | $\cos\varphi$ |

| | | |
|---|---|---|
| Supply circuit breaker<br>Type 'B' or 'C' | triogen® UV SLP150-1 = 6<br>triogen® UV SLP200-2 = 6<br>triogen® UV SLP200-3 = 10<br>triogen® UV SLP250-4 = 16<br>triogen® UV SLP250-6 = 16<br>triogen® UV SLP300-8 = 20<br>triogen® UV SLP350-10 = 25<br>triogen® UV SLP350-12 = 32<br>triogen® UV SLP400-14 = 32<br>triogen® UV SLP500-20 = 32 | A |
| Line voltage, single phase, neutral + earth | 220, 230 & 240 V 50/60Hz | $V_{AC}$ |
| Line current | triogen® UV SLP150-1 = 1.4<br>triogen® UV SLP200-2 = 2.3<br>triogen® UV SLP200-3 = 3.3<br>triogen® UV SLP250-4 = 4.3<br>triogen® UV SLP250-6 = 6.1<br>triogen® UV SLP300-8 = 8.0<br>triogen® UV SLP350-10 = 9.8<br>triogen® UV SLP350-12 = 11.7<br>triogen® UV SLP400-14 = 13.6<br>triogen® UV SLP500-20 = 18<br>All currents increase by 1A when the wiper option is included. | $A_{AC}$ |

Voltages in the equipment:
Mains supply 220-240Vac.
In the control circuit: 220 – 240V ac, 12 V ac & 18V dc.

## 3. Safety Measures and Regulations

The equipment must be installed, put into operation and maintained by trained specialists. The owner and/or user must ensure that the operating personnel have been suitable instructed.

The equipment has been subjected to a hazard analysis, corresponding precautionary measures regarding the safety of persons and domestic animals have been made.
Nevertheless, it is still possible that **danger could arise** as a result of incorrect use, bad maintenance, material changes, etc. These dangers are associated with:

- Electricity
- Mechanical dangers
- Exposure to high intensity UV light

## 3.1 Electricity

The lightning flash and arrowhead symbol is to alert the user to the presence of un-insulated **"DANGEROUS VOLTAGE" within** the enclosure.

The equipment may **only** be opened if the mains supply is isolated. The mains supply must **not** be restored as long as the equipment is open. This applies to both the electrical control panel and the reactor vessel.

**ATTENTION:**

*Working on live equipment is forbidden.*

## 3.2 Mechanical Dangers

The reactor wiper system contains rotating parts and therefore the wiper drive unit cover plates should only be removed by trained personnel after electrically isolating the system.

The equipment contains glass which must be handled with care.

## 3.3 Exposure to High Intensity UV Light

The reactor contains UV emitting lamps and if exposed while energised can cause serious eye and skin damage. Ensure that the mains supply is isolated before removing any of the covers on the reactor.

**WARNING:**

*Exposure to ultraviolet (UV) light can cause damage to eyes and skin. Always switch off and the UV lamps before removing the end plates.*

# 4. Installation Guidance

## 4.1 Installing the UV System

The UV system control panel is designed to be bulkhead mounted utilising the rear enclosure mounting brackets which incorporate fixing holes.

IMPORTANT:

*The reactor control panel uses air cooling. The following guidelines must be adhered to when locating the unit.*

- The reactor and control panel must not be located in a position where the ambient air temperature exceeds 40ºC.
- The reactor and control panel must not be located adjacent to other equipment that directly emit heat
- The reactor and control panel must not be located adjacent any chemical equipment that is likely to emit fumes.
- The reactor should be located within the piping system in such a manner as to ensure that sufficient clearance is available to allow for lamp replacement and wiper maintenance when fitted. See the relevant data information included in this manual.
- Inlet and outlet flange connections should be fitted with either a full face or IBC (Inner Bolt Circle) rubber gasket.

INFORMATION:

*It is recommended that the main piping incorporates a valved bypass around the reactor as well as isolating valves for the inlet and outlet connections thereby allowing the water flow to be bypassed around the reactor during maintenance.*

INFORMATION:

*Failure to comply with any of the above criteria could affect the operation and warranty of the unit and have an adverse effect on the long term reliability and lifespan of the system.*

## 4.2 Mechanical Connection

The reactor vessel is supplied with BS4504 NP10 or ANSI 150 flanges for connection to the water piping system. The flange type and size required is specified at the time of order.

## 4.3 Electrical Connection

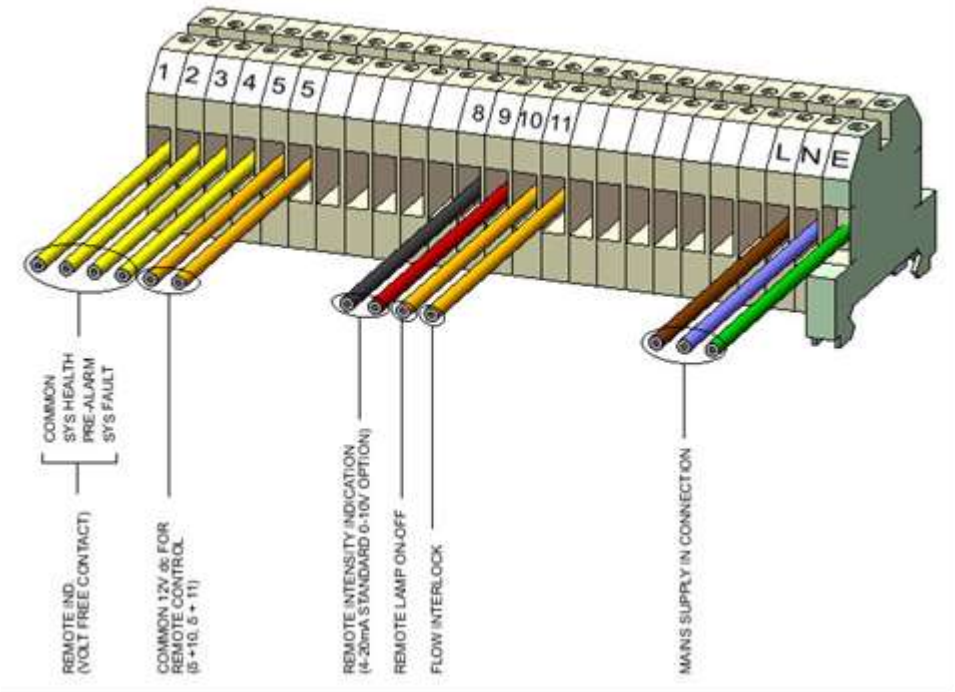


The electrical connections are made to the terminals located on the din rail below the ballasts.

The drawing above shows the typical terminal arrangement for a triogen® UV SLP unit, it should be noted that the numbering and arrangement may differ slightly depending on the unit. Please see the electrical drawings for the correct numbering and arrangement.
The connections are as follows:-

- **Main Supply**
  220, 230 or 240V 1ph 50/60Hz — L, N & E
- **Remote Lamp On-Off Control**
  remote volt free switch — 5 & 10
  (rated for 20V dc 1A)
- **Flow Interlock** (main circ pump or flow switch)
  remote volt free switch — 5 & 11
  (rated for 20V dc 1A)

- **Remote signals**
  volt free contacts (rated 230V ac 1A)

| | | |
|---|---|---|
| Common | 1 | |
| System Healthy | 2 | (closed contact) |
| Pre Alarm (below setpoint) | 3 | (open contact) |
| System Fault | 4 | (open contact) |

- **Re-transmission of UV intensity**
  (only when sensor option included)
  4-20mA set as standard
  0-10V dc selectable 8(+) & 9(-)

**INFORMATION:**

*Remote Indications from Volt Free Contacts*

*Common – System Healthy*
*When the contact is closed it indicates that the UV lamps are ON and there is no fault with the system.*

*Common – Pre Alarm*
*When the contact is open it indicates that the UV intensity is reading between the pre-alarm and alarm levels set in the control system.*

*Common – System Faul*
*When this contact is open it indicates that one of the faults has occurred in the UV system. Details of the fault are indicated on the bottom line of the display.*

*When the lamps are switched on there is a programmed time delay for the Low Intensity alarm to allow the lamps to reach their*

INFORMATION:

*The electrical installation must only be carried out by a suitably qualified electrical engineer.*

*The electrical supply to the unit must be earthed. The reactor must be earth bonded.*

*The cable size and supply circuit breaker must be sufficient to meet the local regulations and the specified requirements in section 2.3.*

*Always check the electrical drawings for the correct details of the connection locations.*

# 5. Commissioning

## 5.1 Commissioning Preparation

Preparation:

- The commissioning personnel authorised by the owner and/or user, must read and understand the operating instructions.
- The commissioning personnel must be familiar with the safety measures and regulations applicable to the country/area in which the system is installed.

## 5.2 Checking the Installation

Before the electrical feed can be connected, the following must be checked:

- Is the control panel secured against moving?
- Is the power supply line feed to the panel protected?
- Is the reactor installed with sufficient access?
- Are the pipework connections tight?
- Are the reactor isolating valves closed?
- Is there adequate ventilation for normal operation?
- Has the system been electrically interlocked with any circulating pumps?

ATTENTION:

*Operating the UV lamp in no conditions should be avoided as this will affect the efficiency of the lamp*

## 5.3 Commissioning the System

- Check that the main electrical power supply is isolated to the control panel.
- Remove the screws retaining the lamp cover plates on the reactor flange plate.

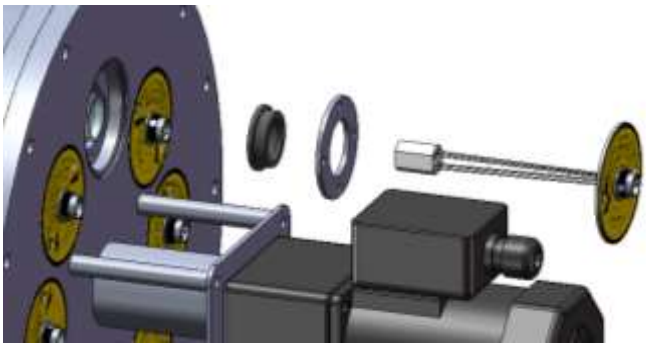

- Withdraw the lamp cover plates which have the lamp connector socket attached.
- Visually inspect the internal thimbles for any signs of damage or cracking that may have occurred during handling and installation.
- Verify that the reactor inlet and outlet valves are closed.
- Remove the ½" BSP plug located near the reactor outlet flange.
- Slowly open the isolating valve at the inlet of the reactor and slowly flood the reactor while air bleeds through the plug located at the reactor outlet.
- Close the reactor inlet valve and refit the ½" BSP plug by the reactor outlet using a new O ring seal as required.
- Open the reactor inlet valve to keep the reactor vessel pressurized.
- The reactor should now be flooded with pressurized water to ensure that the thimbles are watertight as well as the thimble seals.
- Inspect the thimble and seals for any signs of water ingress which should not occur.

INSTRUCTION:

*Both the thimble internal surface and the UV lamp must be completely dry. Failure to ensure this will lead to reduced lamp life.*

- Close the inlet isolation valve.
- Unpack the UV lamps from their packaging taking care not to touch the glass surfaces of the lamp.

*INFORMATION:*

*The UV lamp glass and quartz thimbles must never be handled with a bare hand. When handling the glass, clean white cotton gloves must always be worn. The lamp can be handled by the ceramic ends.*

- Connect the lamp to the lamp socket on the rear of the lamp cover plate and then carefully insert the lamp into the thimble.
- Slide the lamp into position until the cover plate is located in the reactor flange plate recess and re-fix with the retaining screws.
- Connect each of the lamp supply cables from the control panel to the correct reactor thimble cover plate.
- When applicable connect the wiper motor supply cable with plug to the socket located on the control panel gland plate.
- Open the front door of the control panel and visually check for any obvious signs of damage that may have occurred during installation or fitting of the mains power supply cabling.
- Carry out a manual pull test on all internal cable terminations to ensure that none have slackened during
- Transportation or mounting.
- Re-store the main electrical supply to the control panel.
- Measure the supply voltage at the input terminals of the control panel (L, N & E) and check that this matches the voltage shown on the rating plate.
- Re-set all the circuit breakers.
- Check that the cooling fans have start.

INFORMATION:

*The LCD display will illuminate with green backlight and text indicating the system control settings. The bottom line of the control display will indicate the set date and time.*

*Should the display backlight be flashing red check the text message on the fourth line of the display and refer to the appropriate section of the Fault Finding chapter.*

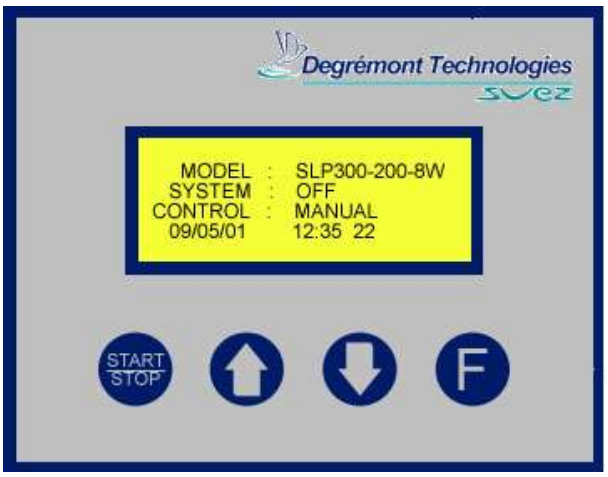


- Set the Language to be used on the displayed (as per the instructions in section 6.6) (default language is English).
- Set the System Control to Manual (as per the instructions in section 6.2).
- Set the Time Clock to the correct date and time (as per the instructions in section 6.4).
- Set the UV alarm points (as per the instructions in section 6.11) (default pre-alarm 80% & alarm 60%).
- Set the Panel Alarm Temperature (as per the instructions in section 6.10) (default temperature is 50ºC – 122ºF).

**FOR REACTORS FITTED WITH OPTIONAL TEMPERATURE SENSOR**

- Set the Reactor Alarm Temperature (as per the instructions in section 6.10) (default temperature is 45ºC – 113ºF).
- Check that the **REACTOR TEMP** reading is similar to the water temperature passing through the reactor (refer to section 6.9 to display the temperature). There will be variations as the reading is showing the outer skin temperature of the reactor which will also be affected by the ambient air temperature.

**FOR REACTORS FITTED WITH OPTIONAL WIPER SYSTEM**

- Set the Auto Wipe Time (as per the instructions in section 6.3) (default time is 6 hours)

- Check the wiper system is operational by initialing a manual wipe (as per the instructions in section 6.3).

INFORMATION:

*It is not possible to see the wiper operating visually. To check it is operating, make sure you can hear the drive motor running. The wiper drive system will wipe in one direction then reverse and return to its starting position. At the end of the return period a few clicks will be heard from the vessel as the spring in the "Smart Drive" is engaged before the motor reverses again for one second to "park" the wiper ready for the next operation.*

- Switch the **UV LAMP(s)** ON by pressing the **START – STOP** button. The "System: On" text will be displayed on the second line of the display.
- Allow the lamps to warm up to their normal efficiency. This will be indicated by the UV Intensity reading reaching its maximum value.
- Once the UV intensity has the correct reading the water flow through the reactor can be started.

The system is now fully operational and the settings for:-

**System Control**

should be set to the correct operational condition.

# 6. Operation

The equipment may only be operated by persons authorised by the owner and/or user. It is up to the owner and/or user how many persons he authorises to operate the equipment, and whether he will instruct further persons with partial functions, e.g. “EMERGENCY STOP”.

The owner and/or user must ensure that the persons authorised by him have familiarised themselves with the safety measures and regulations, and that they also comply with them, in addition to having read and **understood** the operating instructions.

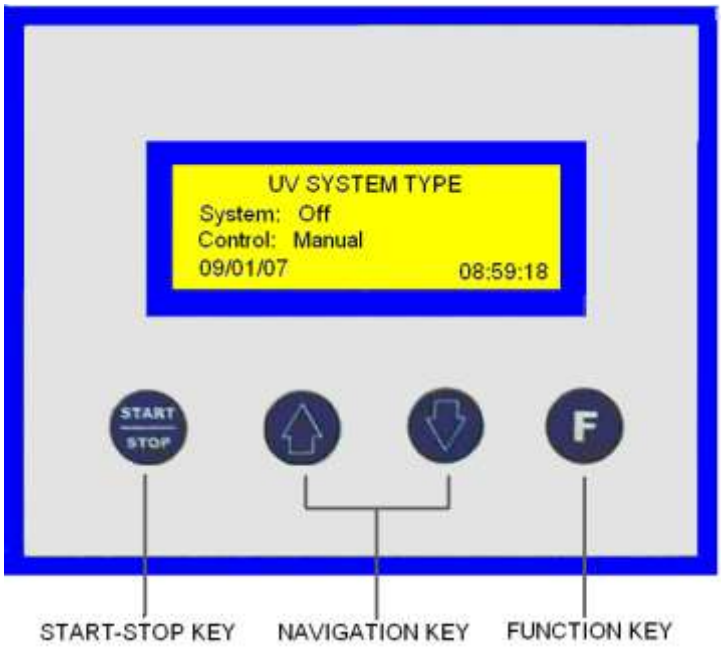


triogen® UV SLP Control System Display with Switch / Keys

## 6.1 Starting-Stopping the UV Lamp(s)

The preconditions for starting are: -

- Water is flowing through the vessel.
- The electrical supply to the control panel is ON.
- No fault is registered on line 4 of the display.

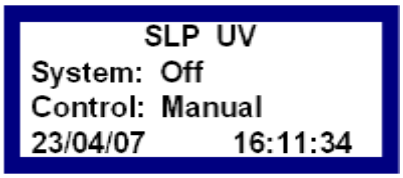


Main Display with no fault registered

INFORMATION:

*Should a fault or warning be indicated by the backlight flashing red check the text on the fourth line of the display and refer to section 8.0 Fault Finding. When no fault is registered the date and time are displayed on the fourth line of the display except when setting parameters.*

**Starting the UV Lamp.**

- Press the **START-STOP** switch.
- "System: On" will be indicated on line 2 of the text display.

INFORMATION:

*When the UV lamp is energized, it takes up to five minutes to reach its rated UVc output.*
*If "System: Interlock" is displayed it indicates that the interlock circuit is in operation and that the lamps can not be operated.*

**Stopping the UV Lamp.**

- Press the **START-STOP** switch.
- "System: Off" will be indicated on line 2 of the text display.

IMPORTANT:

*Excessive switching will cause lamp life to be reduced.*

## 6.2 System Control

The triogen® UV LP control system incorporates the option for a remote UV lamp stop-start facility which allows the lamp to be operated from a remote position utilising a switch with volt-free contacts.

When this option is selected it disables the Start – Stop switch on the control panel door.

This function can be used to integrate with a building management system. A separate input is available for interlocking with the main flow pumps.

To use this option.

- Check that the external wiring required for this function has been connected.
- Press the "F" function key on the control system and the fourth line on the display will change from the date and time to text.

- Press the down arrow navigation key until the text “System Control” is displayed on the fourth line.

- Press the “F” function key and the display will give the option for Manual (local) or Remote.

```
        SLP UV
System:  Off
Control:  Manual
System Control
```

- Use the down arrow navigation key to move the pointer (<) to the “Remote” option.
- Press the “F” function key to return to the main display.

INFORMATION:

*If no key is pressed after using the down arrow key to select the remote function the display will automatically return to the main screen after 30 seconds. The selection of remote <u>will not</u> be stored in the control systems memory.*

The UV lamp will now be controlled by the remote volt free switch.

## 6.3 Wiper Control

The control system incorporates a time controlled auto wipe. The time interval is stored in and controlled by the triogen® UV SLP control system. Once the time interval has elapsed the wiper system will complete a wipe of the thimble(s), parking in its original position. The timer will re-set and the process is repeated.

The control system also allows a manual wipe to be initiated if required. To start a manual wipe.

- Press the “F” function key on the control system and the fourth line on the display will change from the date and time to text.
- Press the down arrow navigation key until the text “Wiper Control” is displayed on the fourth line.
- Press the “F” function key and the display will give the option for Set Auto Wipe Time or Manual Wipe.

```
   WIPER CONTROL
Set Auto Wipe Time <
Manual Wipe
```

- Use the down arrow navigation key to move the pointer to the "Manual Wipe" option and press the function key to display the manual wipe screen.

```
MANUAL WIPE
Yes
No     <
```

- Press the up navigation key to move the pointer to the "Yes" option.
- Press the "F" function key and the manual wipe will be started and the screen will return to the main display.

WARNING/INSTRUCTION:

*Do not repeat a manual wipe more than three times within a thirty minute period, as this will lead to the wiper motor overheating and potential damage.*

To change the Auto Wipe Time.

- Press the "F" function key on the control system and the fourth line on the display will change from the date and time to text.
- Press the down arrow navigation key until the text "Wiper Control" is displayed on the fourth line.
- Press the "F" function key and the display will give the option for Set Auto Wipe Time or Manual Wipe.

```
WIPER CONTROL
Set Auto Wipe Time  <
Manual Wipe
```

- The pointer should be at the "Set Auto Wipe Time" option. Press the function key to display the Auto Wipe Time.

```
SET AUTO WIPE TIME
Auto  Wipe  Every
24 Hours
```

- Use the up & down arrow navigation keys to change the value in Hours to the new setting (default setting is 24 Hours).
- Press the "F" function key and the setting will be stored and the screen will return to the main display.

## 6.4 Time Clock

The control system incorporates a real time clock with date setting. The time and date should be set to the correct time.

To set the clock.

- Press the “F” function key on the control system and the fourth line on the display will change from the date and time to text.
- Press the down arrow navigation key until the text “Time Clock” is displayed on the fourth line.
- Press the “F” function key and the current setting of date and time will be displayed.

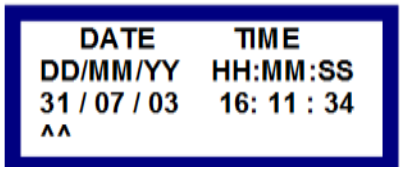


INFORMATION:

*The time is set and displayed in 24 hour format.*

- Use the function key to move the “^^” pointer to select the required number and then use the up & down arrow navigation keys to change to the correct value.
- The final press of the function key will store the setting and return to the main display.

INFORMATION:

*The Time Clock will <u>not</u> automatically adjust for Summer Time. This change must be made manually at the appropriate time.*

## 6.5 Hours Run

The control system incorporates an hours counter which records the amount of time the control panel has been On (System Hours) and the amount of time the UV lamp(s) have been On (Lamp Hours).

When the lamps are within the last 500 hours of a lamp change being required the screen backlight changes to yellow and a countdown is given on the fourth line of the main display “Lamp change in xxxHr”. When the hours count down to zero the text changes to “Lamp Change Required”. If the UV lamp(s) are replaced it is required to re-set the Lamp Hours.

To view the hours and re-set.

- Press the “F” function key on the control system and the fourth line on the display will change from the date and time to text.
- Press the down arrow navigation key until the text “Hours Run” is displayed on the fourth line.
- Press the “F” function key and the System & Lamp Hours are displayed.

```
HOURS RUN
System Hours:    10000
Lamp Hours:      05000
Reset Hours      No
```

INFORMATION:

*It is not possible to reset the System Hours.*

- Use the up arrow navigation key to toggle the No to select “Yes”. Press the function key and the Lamp Hours are reset to zero and the screen will return to the main display.

IMPORTANT:

*The Lamp Hours should only be re-set after a new UV Lamp has been fitted.*

## 6.6 Language

It is possible for the displayed language to be changed to one of the standard options when required.

To re-set the Language.

- Press the “F” function key on the control system and the fourth line on the display will change from the date and time to text.
- Press the down arrow navigation key until the text “Language” is displayed on the fourth line.
- Press the “F” function key and the Language options are displayed.

```
LANGUAGE
English        <
French
German
```

- Use the down arrow navigation key to toggle the “<” pointer to select the required language. Once the “<” is on the bottom line it will scroll the screen through the additional languages.

- When the required language is highlighted, press the function key and the language will change and the screen will return to the main display.

## 6.7 UV Intensity

The control system incorporates one UV intensity. The UV intensity sensor constantly measures the intensity of UV light being radiated on the inside wall of the vessel.

The back light will change to yellow when the value of intensity drops below the pre alarm setpoint.

The backlight will flash red and the alarm “Low UV Intensity” is displayed when the value drops below the preset alarm point.

To view the Intensity.

- Press the “F” function key on the control system and the fourth line on the display will change from the date and time to text.
- Press the down arrow navigation key until the text “UV Intensity” is displayed on the fourth line.
- Press the “F” function key and the Intensity is displayed.

```
UV INTENSITY
Sensor 1:    000%
Sensor 2:    000%
```

INFORMATION:

*If required the display can be changed to read in W/m². This change can only be made by an approved service engineer.*

- Press the function key to return to the screen to the main display.
- If the UV intensity sensor readings are displayed in W/m², they will be displayed with one decimal for a reading of 10.0 or higher and two decimals for a reading below 10.0.

## 6.8 UV Sensor Calibration

After a UV Lamp change or due to changes in the water quality or operating system it may be required to re-calibrate the sensor.

See section 7.7 for details on how to calibrate in Watts (to a known reference sensor).

IMPORTANT:

*The re-calibration should only be completed within the first 100 hours of operation of new UV Lamps and at nominal flow and water conditions.*

INFORMATION:

*The UV lamp must have been operating for at least 15 minutes before completing a calibration.*

To calibrate the monitor.

- Press the “F” function key on the control system and the fourth line on the display will change from the date and time to text.
- Press the down arrow navigation key until the text “UV Sensor Cal.” is displayed on the fourth line.
- Press the “F” function key and the calibration screen is displayed.

INFORMATION:

*All UV Lamps must be operating to complete a calibration. If not a warning message will be given and it will not be possible to calibrate the monitor/sensor.*

- *Press the up arrow navigation key to move the "<" pointer to the "Yes" option.*
- *Press the function key to initiate the calibration. Text will be displayed to confirm the calibration is being successfully completed and the screen will then return to the main display.*

The intensity reading can now be checked as per section 6.7 and the display will read "100%".

## 6.9 Operating Values

The control panel and reactor are fitted with temperature sensors. A reactor temperature sensor is also available as an option. These sensors monitor the internal temperature of the control panel & the surface temperature of the reactor at the sensor position. The control system also counts the number of Off – On cycles of the set of lamps.

To display these values.

- Press the "F" function key on the control system and the fourth line on the display will change from the date and time to text.
- Press the down arrow navigation key until the text "Operating Values" is displayed on the fourth line.
- Press the "F" function key and the values are displayed.

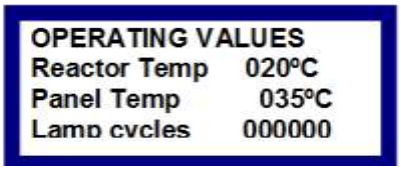


INFORMATION:

*The temperatures can be displayed in F relating to Fahrenheit in lieu of C for Centigrade. To change between the two options the up and down navigation keys are pressed.*

- Press the function key to return to the main display.

## 6.10 Temp Alarm Settings

Alarm points are set for both the Panel and Reactor temperatures so that if they increase above the expected level they will shut down the UV lamp set and protect vital components from serious damage.

To set the alarm points.

- Press the “F” function key on the control system and the fourth line on the display will change from the date and time to text.
- Press the down arrow navigation key until the text “Temp Alarm Settings” is displayed on the fourth line.
- Press the “F” function key and the screen is displayed.

- Press the down or up arrow navigation
- key to change the Panel Temp value.
- Press the function key to select the Reactor Temp option.
- Press the function key to save values and return to the main display.

INFORMATION:

*The alarm temperatures will be displayed in either Centigrade or Fahrenheit to match the option selected in Operating Values.*

## 6.11 UV Alarm Settings

Alarm points are set for the UV Intensity to give a warning when the level reaches a pre-set valve. Two points can be set. Pre-alarm and Alarm. When the value drops between the pre-alarm the back light will change to Yellow. When the level drops below the alarm point the back light will flash red and the warning “Low UV Intensity” will be given on the fourth line of the main display.

INFORMATION:

*When the lamp set is switched On there is a time delay before the alarm is activated to allow the lamps to reach there nominal intensity.*
*The UV Low Intensity alarms are temporarily disabled whenever the Sensor Calibration procedure is enabled (refer to section 6.8).*

To display this value.

- Press the “F” function key on the control system and the fourth line on the display will change from the date and time to text.
- Press the down arrow navigation key until the text “UV Alarm Settings” is displayed on the fourth line.
- Press the “F” function key and the screen is displayed.

```
UV ALARM SETTINGS
UV Pre Alarm xxx%
UV Alarm     xxx%
```

INFORMATION:

*When the lamp set is switched On there is a time delay before the alarm is activated to allow the lamps to reach their nominal intensity.*
*The UV Low Intensity alarms are temporarily disabled whenever the Sensor Calibration procedure is enabled (refer to section 6.8).*
*The preset value of the UV Pre-Alarm is 80%, the preset value for the UV Alarm is 60%*

- Press the down or up arrow navigation key to change the UV Pre Alarm value.
- Press the function key to select the UV Alarm option.
- Press the function key to save values and return to the main display.

## 6.12 Spare Parts List

To simplify the ordering of spare parts the part no. of some of the key components can be viewed on the display.
To view the spare parts list.

- Press the “F” function key on the control system and the fourth line on the display will change from the date and time to text.
- Press the down arrow navigation key until the text “Spare Parts List” is displayed on the fourth line.
- Press the “F” function key to display the part number and description.

```
SPARE PARTS LIST
UV Lamp
Part No. VELL017
```

- Press the down arrow navigation key to scroll through the parts available.
- Press the function key to return to the main display.

# 7. Maintenance

Maintenance work may only be carried out by personnel who have been trained and authorised for this work by the owner and/or user. The owner and/or user must ensure that the maintenance personnel are familiar with the safety measures and regulations, and that they also comply with them, in addition to having read and understood the operating instructions.

Only original replacement parts must be used.

The following are the recommended service intervals for replacement parts:

- UV lamp change - as indicated on the control panel (500 hour warning given).
- UV lamp thimble change - once per two years
- UV wiper ring change - once per year
- Control Panel filter mat - as required (dependant on site conditions).
- Quartz surface cleaning - as appropriate
- UV intensity sensor check - Monthly or twice a year

In addition the wiper drive mechanism should be inspected on a yearly basis.

## 7.1 Replacing the UV lamp(s).

The UV lamps will require to be replaced when the “Lamp Change Required” indication is given on the fourth line of the display. A countdown from 500 hours is given before the Lamp change warning is given.

To replace a UV lamp.

- Check that the main power supply is isolated to the control panel.
- Remove the bolts holding the wiper motor and plate to the end plate and lift free.

WARNING/INSTRUCTION:

*Make sure that the power has been isolated or that the UV lamp(s) have been OFF for at least 15 minutes before carrying out the following procedure. This is to insure that any residual heat on the lamp has been dissipated.*

- Unplug the lamp cable socket from the lamp cover plate.
- Loosen the two fixing screws on the lamp cover plate.
- Withdraw the lamp cover plate and it will pull the lamp from the glass tube.
- When the lamp end is accessible unplug the coverplate and remove the lamp.
- Visually check the internals of the reactor glass thimble for any signs of cracking or water leakage that could have occurred during operation.
- Ensure the internal of the lamp thimble is completely dry.

INFORMATION:

*The UV lamp glass and quartz thimble must never be handled with a bare hand. When handling the glass, clean white cotton gloves must always be worn.*

- Connect the new lamp to the lamp socket on the rear of the lamp cover plate and then carefully insert the lamp into the glass thimble.
- Slide the lamp into position until the cover plate is located in the reactor flange plate recess and re-fix with the retaining screws.

INSTRUCTION:

*Both the thimble internal surface and the UV lamp must be completely dry. Failure to ensure this will lead to reduced lamp life.*

- Re-connect the lamp cable socket to the cover plate.
- Proceed as detailed above for all additional lamps that require replacement.
- Mount the wiper motor and plate back in position, by the reactor end plate.
- If all lamps have been changed as part of a normal aged lamp replacement routine re-set the lamp hours run as described in section 6.5.

The UV system is now back on line.

## 7.2 Replacing the UV lamp thimble(s).

The reactor thimble which houses the UV lamp will require to be replaced after two years of operation (or at the nearest lamp change procedure to this time).

- Stop the water flow through the reactor and stop the UV lamps.
- Check that the main power supply is isolated to the control panel.

WARNING/INSTRUCTION:

*Make sure that the power has been isolated or that the UV lamp has been OFF for at least 15 minutes before carrying out the following procedure. This is to insure that any residual heat on the lamp has been dissipated.*

- Stop the flow of water through the reactor by operating the by-pass valve or by stopping the pump(s).
- Close the isolating valves fitted on the inlet and outlet lines of the reactor vessel.
- Remove the ¾" BSP bottom drain plug located on the underside of the reactor and drain the reactor of all water.
- Remove the ½" BSP plug located near the reactor outlet flange.
- Remove the bolts holding the wiper motor and plate to the end plate and lift free.
- Unplug the lamp cable socket from the lamp cover plate.
- Loosen the two fixing screws on the lamp cover plate.
- Withdraw the lamp cover plate and lamp from the glass tube.
- Unscrew the two thimble plate retaining screws and remove the plate including plastic spacer.

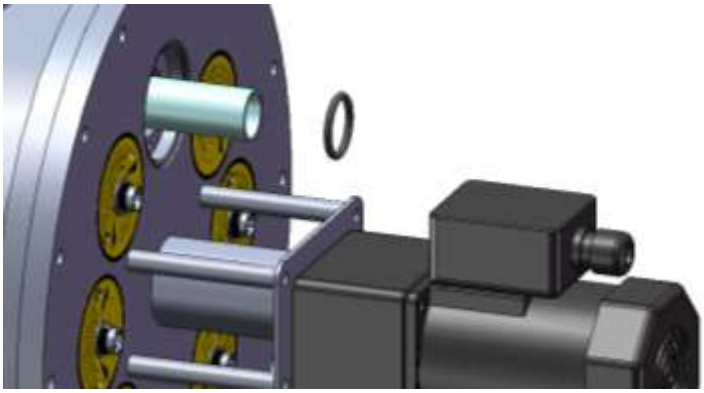

- Withdraw the thimble and o-ring.
- Insert the new quartz thimble, taking care to ensure that it locates through the wiper ring and into the ptfe end cup.

INFORMATION:

*The new quartz thimble must not be handled with bare hands. When handling the glass, clean white cotton gloves must always be worn.*

- Fit a new o-ring seal by placing over the end of the thimble and then push into the O ring seat.
- Position the thimble retaining plate and spacer over the thimble end.
- Replace the two retaining screws and gently tighten until the in the correct position.
- Visually check that the thimble shows no signs of cracking around the o-ring position and that the o-ring is compressed on to the thimble.
- Refit the ¾" BSP drain plug to the reactor using a O ring seal as required.
- Slowly open the isolating valve at the inlet of the reactor and slowly flood the reactor while air bleeds through the ½" BSP plug located near the reactor outlet flange.
- Close the reactor inlet valve and refit the ½" BSP plug by the reactor outlet using a O ring seal as required.
- Open the reactor inlet valve to keep the reactor vessel pressurized.
- Check the end plate and o-ring seal of the thimble(s) for any signs of water leakage and leave for a period of fifteen minutes. If any leakage is observed isolate the water as previously described, inspect and re-seal, change thimble or o-rings as necessary

INFORMATION:

*Depending on the position of the reactor in the system small amounts of air may pass through the system during the first few minutes after re-starting the water flow through the reactor.*

**INSTRUCTION:**

*Both the thimble internal surface and the UV lamp must be completely dry. Failure to ensure this will lead to reduced lamp life.*

- Re-insert the UV lamp and refit as before.
- Re-connect the lamp cable socket connector.
- Mount the wiper motor and plate back in position, by the reactor end plate.
- Turn on the lamps and start the flow of water through the reactor by starting the pump(s).

The system is now back on-line.

## 7.3 Replacing the thimble wiper ring(s).

The thimble wiper ring(s) will require to be replaced after two years of operation.

- Check that the main power supply is isolated to the control panel.

IMPORTANT:

*Make sure that the system has completed any auto wipe of the quartz thimble and is in the parked mode before isolating the power.*

WARNING/INSTRUCTION:

*Make sure that the power has been isolated or that the UV lamp has been OFF for at least 15 minutes before carrying out the following procedure. This is to insure that any residual heat on the lamp has been dissipated.*

- Stop the flow of water through the reactor by operating the by-pass valve or by stopping the main circulation pump(s).
- Stop the UV lamps and isolate the power to the control panel.
- Close the isolating valves fitted at the inlet and outlet of the reactor vessel.
- Remove the bottom 3/4" BSP drain plug located on the underside of the reactor and drain the reactor of all water.

- Remove the ½” BSP plug located near the reactor outlet flange.
- Remove the bolts holding the wiper motor and plate to the end plate and lift free.
- Remove the UV lamp and quartz thimble as described previously.
- Unbolt the reactor end plate and withdraw the internal assembly.
- The wiper shaft and wiper ring assembly will now be visible.
- Visually inspect the internal surface of the reactor and clean as necessary.
- Loosen the cap screws holding the wiper ring retaining plate.
- Slide the wiper ring out between the loosened screws (it will be necessary to remove one screw).
- Fit a new wiper ring and retighten the screws and check that the ring is free to slide between the two retaining plates.

INFORMATION:

*Make sure that the wiper ring is fitted in the correct orientation. With the wiper ring correctly fitted the O ring in the wiper ring should not be on the opposite side to the reactor end plate.*

- Check that the wiper ring assembly is in the correct “parked” position. The wiper running nut should be at the end of the threaded section of the drive shaft at the reactor end plate side.
- Check the condition of the o-ring on the end flange plate and replace as necessary.
- Re-insert the assembly and line-up the end flange plate.
- Replace all flange plate bolts and tighten.
- Refit the thimble(s) as described previously.
- Refit the ¾” BSP drain plug to the reactor.
- Slowly open the isolating valve at the inlet of the reactor and slowly flood the reactor while air bleeds through the ½” BSP plug located near the reactor outlet flange.
- Close the reactor inlet valve and refit the ½” BSP plug by the reactor outlet using a new O ring seal as required.
- Open the reactor inlet valve to keep the reactor vessel pressurized.
- Check the end plate and o-ring seal of the thimble(s) for any signs of water leakage and leave for a period of fifteen minutes. If any leakage is observed isolate the water as previously described, inspect and re-seal, change thimble or o-rings as necessary

INFORMATION:

*Depending on the position of the reactor in the system small amounts of air may pass through the system during the first few minutes after re-starting the water flow through the reactor.*

INSTRUCTION:

*Both the thimble internal surface and the UV lamp must be completely dry. Failure to ensure this will lead to reduced lamp life.*

- Re-insert the UV lamp and refit as previously described.
- Re-connect the lamp cable socket connector.
- Mount the wiper motor and plate back in position, by the reactor end plate.
- Turn on the lamps and start the flow of water through the reactor by starting the pump(s).

The system is now back on-line.

## 7.4 Inspecting the wiper drive mechanism.

The wiper drive mechanism should be inspected on a yearly basis to ensure its correct continual operation.

- Check that the main power supply is isolated to the control panel.

IMPORTANT:

*Make sure that the system has completed any auto wipe of the quartz thimble and is in the parked mode before isolating the power.*

- Visually inspect the wiper assembly where it passes through the end plate for any signs of water leakage.
- If water is present it indicates that the shaft seal is passing water and that it should be replaced.
- To replace the shaft seal.
- Dismantle the reactor as described in section 7.3.

- Remove the bolts holding the wiper motor and plate to the end plate and lift free.

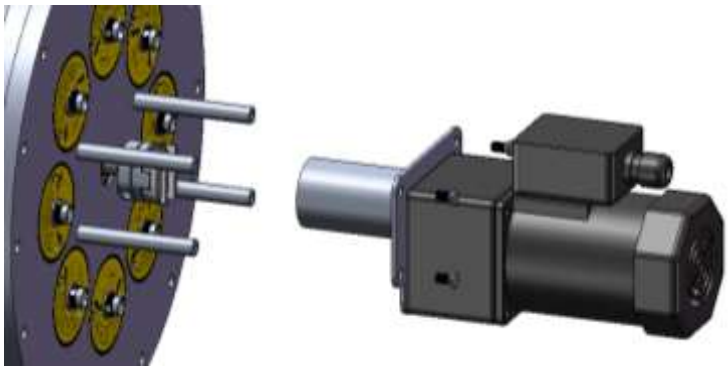

- Remove the drive hub from the end of the wiper shaft.
- Remove the circlip from the end of the wiper shaft (fitted in front of the bearing).
- On the other side of the end plate remove the cap screws from the PTFE mechanical seal cover.
- Remove the assembly internal end plate. The bolts are behind the PTFE spacers which screw off.
- Remove the shaft from the end plate.
- Check the bearing and replace as necessary. It is common for the bearing to be replaced at the same time as the mechanical seal as it can be damaged by the water leakage.
- Fit new seal to end plate and shaft (the seal comes in two parts). Re-assemble in the reverse sequence paying attention to the instructions in section 7.3.

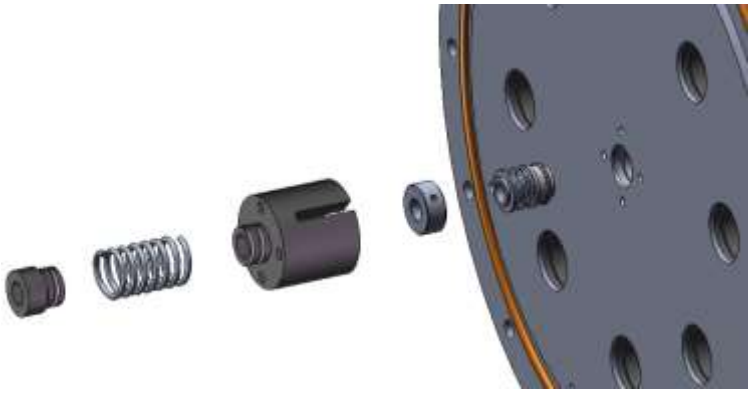

-

IMPORTANT:

*Care should be taken when fitting the new seal as the carbon surfaces are very brital and damage to these parts will affect the integrity of the seal.*

- Initiate a manual wipe and observe the correct function of the wiper motor.

## 7.5 Replacing the Control Panel filter mat.

Depending on the environment where the control panel is installed, the filter mat fitted to the inlet fan grills must be cleaned or changed on a regular basis.

It is recommend that after commissioning that the filter mat is checked on a monthly basis. Thereafter, depending on the results of these checks this could be reduced to between 3 to 6 months.

## 7.6 Quartz surfaces cleaning

Although the use of low-pressure UV lamps in drinking water UV reactors typically equate to a low rate of quartz surface fouling one cannot completely rule out fouling. If the UV Prealarm triggers frequently with new lamps cleaning of the reactor internal quartz surfaces is recommended.

To clean the reactor internal quartz surfaces

- Stop the water flow through the reactor and stop the UV lamps.
- Check that the main power supply is isolated to the control panel.

WARNING/INSTRUCTION:

*Make sure that the power has been isolated or that the UV lamp has been OFF for at least 15 minutes before carrying out the following procedure. This is to insure that any residual heat on the lamp has been dissipated.*

- Close the isolating valves fitted at the inlet and outlet of the reactor vessel.
- Remove the bottom 3/4” BSP drain plug located on the underside of the reactor and drain the reactor of all water.
- Remove the ½” BSP plug located near the reactor outlet flange.
- Remove the sensor from the port assembly and cap the end of it to protect the quartz aperture window.
- Remove the sensor port from the extension barrel.
- Flush any solids that have settled inside the extension barrel.
- Soak a lint free piece of cloth with a mild solution of citric acid (pH 2 to 3) and clean the port quartz window to remove any foulant deposit.

- Screw the clean sensor port back into the extension barrel. Avoid touching the quartz window with a bare hand.

INSTRUCTION:

*The internal surface of the port quartz window must be completely dry. Failure to ensure this will lead to a reduced UV intensity reading and possible damage to UV intensity sensor.*

- Re-insert the UV intensity sensor inside the port and tighten the port cap to secure the sensor in place.
- Remove the bolts holding the wiper motor and plate to the end plate and lift free.
- Unplug the lamp cable socket from the lamp cover plate.
- Loosen the two fixing screws on the lamp cover plate.
- Ensure the internal of the lamp thimble is completely dry
- Withdraw the lamp cover plate and lamp from the glass tube.
- Unscrew the two thimble plate retaining screws and remove the plate including plastic spacer.
- Withdraw the thimble.

INFORMATION:

*The UV lamp glass and quartz thimble must never be handled with a bare hand. When handling the glass, clean white cotton gloves must always be worn.*

- Soak a lint free piece of cloth with a mild solution of citric acid (pH 2 to 3) and clean the **external** surface of the quartz thimble to remove any foulant deposit.
- Reinsert the clean quartz thimble taking care to ensure that it locates through the wiper ring and into the ptfe end cup.

INSTRUCTION:

*The thimble internal surface must be completely dry. Failure to ensure this will lead to reduced lamp life.*

- Fit a new o-ring seal by placing over the end of the thimble and then push into the O ring seat.
- Position the thimble retaining plate and spacer over the thimble end.
- Replace the two retaining screws and gently tighten until the in the correct position.

- Visually check that the thimble shows no signs of cracking around the o-ring position and that the o-ring is compressed on to the thimble.
- Refit the ¾” BSP drain plug to the reactor using a new O ring seal as required.
- Slowly open the isolating valve at the inlet of the reactor and slowly flood the reactor while air bleeds through the ½” BSP plug located near the reactor outlet flange.
- Close the reactor inlet valve and refit the ½” BSP plug by the reactor outlet using a O ring seal as required.
- Open the reactor inlet valve to keep the reactor vessel pressurized.
- Check the end plate and o-ring seal of the thimble(s) for any signs of water leakage and leave for a period of fifteen minutes. If any leakage is observed isolate the water as previously described, inspect and re-seal, change thimble or o-rings as necessary.
- Connect the new lamp to the lamp socket on the rear of the lamp cover plate and then carefully insert the lamp into the glass thimble.
- Slide the lamp into position until the cover plate is located in the reactor flange plate recess.
- Secure the lamp cover plate in place by refixing the retaining screws.
- Proceed as detailed above for all the sleeves inside the UV reactor.
- Mount the wiper motor and plate back in position by the reactor end plate.
- Turn on the lamps and start the flow of water through the reactor by starting the pump(s).

The UV system is now back on line.

INFORMATION:

*Depending on the position of the reactor in the system small amounts of air may pass through the system during the first few minutes after re-starting the water flow through the reactor.*

## 7.7 UV intensity calibration

The sensor calibration is only possible when all UV lamps are ON. The UV intensity reading from the reactor sensor(s) can be changed by a correction factor between 0.90 and 1.30.

It is recommended, however not required, that the reactors UV intensity sensors should be periodically checked against a reference sensor to detect and address any drift with the UV intensity reading. This operation takes place with the UV reactor in operation.

WARNING:

*Exposure to ultraviolet (UV) light can cause damage to eyes and skin. Always wear gloves, protective clothing and goggles when performing a UV intensity check.*

To check the sensor UV intensity reading

- Disable the UV Pre-alarm and Alarm by enabling the Sensor Calibration Mode at the triogen® UV SLP System Control Display (section 6.8).
- Remove the reactor UV intensity sensor from the port and cap it to protect the quartz aperture window.
- Attach a piece of lab grade wiper to the tip of a long tweezers (or equivalent device) and dry the internal side of the port quartz window.
- Re-insert the reactor UV intensity sensor and log its reading ($S_{duty}$)
- Swap the reactor UV intensiy sensor with the DVGW reference sensor and log the reference UV intensity reading ($S_{ref}$).
- If $S_{duty} > 1.05 \times S_{ref}$ the reactor UV intensity sensor should be replaced with a spare unit (newly calibrated) and the disabled sensor returned to SUEZ Purification and Disinfection Systems Ltd.
- If $S_{duty} < 0.9 \times S_{ref}$ the reactor UV intensity sensor should be replaced with a spare unit (newly calibrated) and the disabled sensor returned to SUEZ Purification and Disinfection Systems Ltd for recalibration.
- If $S_{duty}$ is within $0.9 \times S_{ref}$ and $1.0 \times S_{ref}$ take note of $(1-S_{duty}/S_{ref})$ as percent and increase $S_{duty}$ at the triogen® UV SLP System Control Display until $S_{duty} = S_{ref}$ (section 6.8).
- For UV reactor having two UV intensity sensors repeat the UV intensity check procedure above for the additional sensor.
- When the calibration procedure is completed the UV Low Intensity Pre-alarm and Low Intensity Alarm are automatically reset (section 6.8).

UV system is now back on line.

To correct the UV intensity reading of the sensor(s).

- Press the “F” function key on the control system and the fourth line on the display will change from the date and time to text.
- Press the down arrow navigation key until the text “UV Sensor Cal” is displayed on the fourth line.
- Press the “F” function key and the CAL page is displayed.

```
     UV SENSOR CAL
Calibrate Sensors
No    <
Yes
```

- Press the down arrow navigation key to select Yes
- Press the “F” function key and the calibration screen is displayed for the first sensor. If No is selected the display will return to the main display.

INFORMATION:

*When “Yes” is selected to complete a calibration the Low and Pre UV Intensity alarms are disabled and the screen backlight will blink between green and yellow to signify this special operating mode.*
*If the UV Sensor Cal mode is not completed within 30 minutes it will be automatically reactivating both the Low and Pre UV Intensity alarms and the screen will revert back to the main display.*

```
UV SENSOR CAL
Sensor1 Calibrate
UV Input: xxxx W/m2
Cal. Factor 1.00
```

- Use the up & down arrow keys to adjust the reading to the correct value. The Cal. Factor will show the current correction factor being applied.
- Press the function key and the Sensor 1 new reading will be saved and the screen will change to allow the procedure to be repeated for the second sensor (if fitted) or return to the main display.

INFORMATION:

*The last correction factors entered in the UV Sensor Cal page are saved. However, keeping a log of the sensor correction factors entered for each UV intensity check session is recommended.*
*Once a UV sensor is replaced with a new unit the corresponding correction factor should be reset to 1.00.*
*The correction factor can only adjust in the range of 0.90 to 1.30.*

# 8. Fault Finding

Fault finding work may only be carried out by maintenance personnel who have been trained and authorised for this work by the owner and/or user. The owner and/or user must ensure that the maintenance personnel authorised to carry out this work are familiar with the safety measures and regulations, and that they also comply with them, in addition to having read and understood the operating instructions.

WARNING:

*During the following procedures it will be required to carry out tests on live circuits. These checks should only be carried out by suitably qualified engineers who fully understand the electrical circuits and the voltages present.*

## 8.1 Loss of all Indications

This fault is evident when the LCD display fails to illuminate and indicate. This can be caused by the following:

- Failure of the power supply.
- Failure of the control MCB2.

For these check.

- The supply circuit breaker is On (external to the control panel).
- Check the voltage at the inlet terminals.
- Check that control MCB2 is in the ON position.
- Check the step down transformer that provides the 12V ac to the control card.

If all of the above are found to be OK and the fault still exists then the problem must be with the control card and this must be returned for repair or replaced.

## 8.2 Fault Indication – Lamp x Fault

This fault is indicated by the text “Lamp x Fault” and the red backlight flashing on the main screen.

It indicates that

- MCB 1 has tripped.
- The lamp ballast has failed.
- The UV lamp has failed.
- The UV lamp connection plug has failed.

For these check.

- Visually check MCB 1 to ensure it has not tripped. If tripped all lamps will be giving the fault indication in turn.
- Check that the red LED is lit on the appropriate ballast. If not lit the ballast has failed.
- Replace the lamp with a lamp that is known to be good. If the replacement lamp still fails to operate then the fault is not with the lamp.
- Visually inspect the lamp connection lead for signs of deteriation specifically at the electrical connection points. The check should start at the lamp cable socket and work back to the ballast. The check should only be made when the lamps are all OFF.

IMPORTANT:

*Use a suitable resistance meter to measure continuity resistance as required.*

INFORMATION:

*This fault will change the System Fault contact.*

## 8.3 Fault Indication – Panel High Temp

This fault is indicated by the text “Panel High Temp” and the red backlight flashing on the main screen.

It indicates that.

- The control card has registered a temperature above the alarm point inside the control panel.

For this check.

- The temperature registered on the control card and the alarm point.
- The vent grill filter mats.
- The operation of the cabinet ventilation fans.
- The plant room ambient temperature.
- For obstructions to the flow of air to and from the vent grills.

INFORMATION:

*This fault will switch OFF all the UV Lamps.*
*The fault is reset by pressing the function key.*
*Once the fault indication has been cleared the system can be re-started.*

## 8.4 Fault Indication- Reactor High Temp

This fault is indicated by the text “Reactor High Temp” and the red backlight flashing on the main screen.

It indicates that.

- The control card has registered a temperature above the alarm point at the reactor sensor point.

For this check.

- The temperature registered on the control card and the alarm point.
- The water flow through the vessel.
- The operation of the temperature sensor

INFORMATION:

*When disconnected, measure the resistance of the sensor. It should be a low value. If it is high (>2000Ω) change the sensor.*
*This fault will switch OFF all the UV Lamps.*
*The fault is reset by pressing the function key.*
*Once the fault indication has been cleared the system can be re-started.*

## 8.5 Fault indication- Wiper Fault

This fault is indicated by the text “Wiper Fault” and the red backlight flashing on the main screen.

It indicates that.

- MCB3 has tripped. This is the MCB for the wiper circuit.

For this check.

- The wiper shaft moves freely. This is completed by removing the wiper motor and mounting plate and turning the wiper shaft by hand. The shaft should move freely in both directions. Make sure the shaft is turned back to it’s original position after the check. If the shaft does not move freely in both directions the internal assembly must be removes and the running nut checked. (see section 7.3 for details on removing the assembly).
- The wiper motor run capacitor.
- The wiper motor.

INFORMATION:

*This fault will <u>not</u> switch OFF the UV Lamps.*
*The fault will reset when the MCB is reset. .*
*If the failure occurred during one of the wipe operations the control card will log the point at which the fault occurred and re-start the sequence from the same point once the fault is reset.*
*If testing the wiper motor while disconnected from the wiper shaft both the motor and the wiper shaft must be re-set to their start positions before re-fitting the wiper motor*

## 8.6 Fault Indication- Low UV Intensity

This warning is indicated by the text “Low UV Intensity” and the red backlight flashing on the main screen.

It indicates that.

- The control card has registered a UV intensity below the alarm set-point while the UV lamps are ON.

For this check.

- That all UV Lamps are operating.
- If the UV lamp(s) are at the end of their rated life (normally after 16000 hours operation).
- For a change in the water quality (transmission).
- If the UV lamp quartz thimble has been contaminated.

- If the UV lamp quartz thimble has reached the end of its rated life (should normally be changed every 2 years).
- The sensor has not reached its maximum deviation from past intensity checks with a reference sensor.
- That the UV sensor is giving an output reading (0-10V dc).
- The sensor cable and connections have not been damaged.

INFORMATION:

*This fault will change the System Fault contact.*

*The UV sensor generates a 4– 20mA signal that is input to the control card. This signal can be measured to confirm the sensors operation..*

*The UV thimble has a rated operational life of approx. 2 years. After this time the solarisation that has occurred to the glass will reduce the UV light passed into the water*

## 8.7 Warning Indication- Yellow Backlight (UV Intensity Pre-alarm)

This warning is indicated by the backlight changing from green to yellow on the main screen.

It indicates that.

- The control card has registered a UV intensity between the alarm and pre-alarm set-points while the UV Lamps are ON.

For this check.

- That all UV Lamps are operating.
- If the UV lamp(s) are at the end of their rated life (normally after 16000 hours operation).
- For a change in the water quality (transmission).
- If the UV lamp quartz thimble has been contaminated.
- If the UV lamp quartz thimble has reached the end of its rated life (should normally be changed every 2 years).
- The sensor has not reached its maximum deviation from past intensity checks with a reference sensor.
- The sensor adaptor window has not leaked or been contaminated.

## 8.8 Warning indication- Lamp Change in xxxHr

This warning is indicated by the text “Lamp Change in xxxHr” and the backlight changing from green to yellow on the main screen.

It indicates that.

- The control card has registered that the UV lamp(s) are in the last 500 hours of their 16,000 hour expected life.

For this

- Make arrangements so that the lamp(s) can be changed without delay when the count reaches 000 and the warning indication Lamp Change Required is displayed.

## 8.9 Warning indication- Lamp Change Required

This warning is indicated by the text “Lamp Change Required” and the red backlight flashing on the main screen.

It indicates that.

- The control card has registered that the UV Lamp(s) are at the end of their rated life.

For this.

- Change the UV Lamp.
- Re-set the Lamp hours counter.

INFORMATION:

*This will change the System Fault contact.*

*Illumination of the Lamp Change Required warning means that the lamp has reached the end of it’s rated life where it is expected to maintain the correct level of UVc light emitted at a specific wavelength. It does not mean that the lamp will fail to illuminate.*

# 9. Spare Parts

## 9.1 Reactor spare parts triogen® UV SLP 1-14

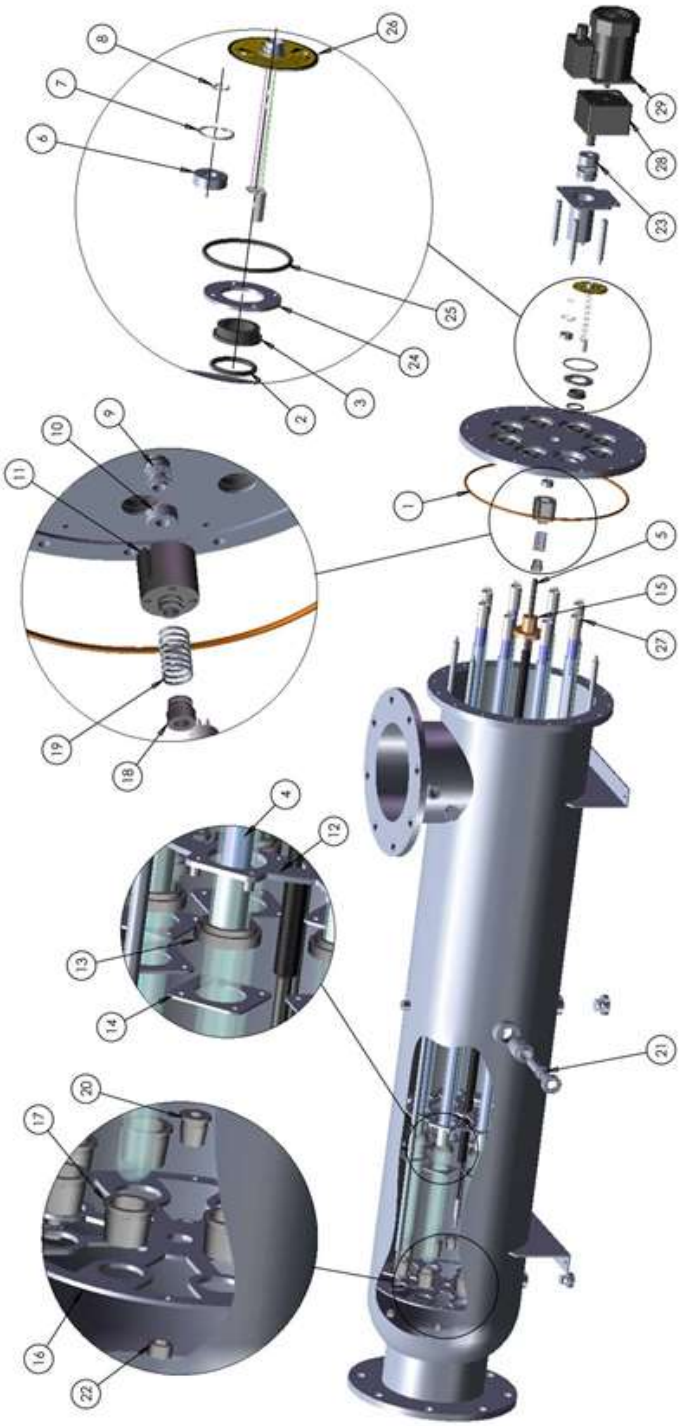

| ITEM No. | PART DESCRIPTION | PART No. | ITEM No. | PART DESCRIPTION | PART No. | ITEM No. | PART DESCRIPTION | PART No. |
|---|---|---|---|---|---|---|---|---|
| 1 | FLANGE O-RING (VARIED DIAMETER) | - | 11 | SLP SPRING SUPPORT BUSH | VMPP030 | 21 | 1" UV SENSOR * | VEPM019 |
| 2 | O-RING RED SIL 70 28 X 3 SECT | VVOR764 | 12 | SLP300-B WIPER PLATE | VMMP2116 | 22 | SLP END SUPPORT PLATE SPACERS | VMPP051 |
| 3 | SLP THIMBLE RETAINING RING | VMPP052 | 13 | 28mm WIPER RING + O-RING (VVOR739) | VMPP725 | 23 | MOTOR/DRIVE SHAFT KEY ASSEMBLY | SPR0130 |
| 4 | QUARTZ THIMBLE DOMED END 28mm O.D. X 1.5mm WALL | VANC015 | 14 | SLP WIPER RING CLAMP PLATE | VMMP2193 | 24 | SLP THIMBLE O-RING CLAMP PLATE | VMMP2194 |
| 5 | SLP DRIVE SHAFT | VMMP2198 | 15 | FLANGED RUNNING NUT | VMMP2222 | 25 | O-RING NITRILE 65 ID X 2.5 SECT | VVOR738 |
| 6 | DRIVE SHAFT MOTOR END BEARING | VMS740 | 16 | SLP300-B THIMBLE SUPPORT PLATE | VMMP2214 | 26 | SLP THIMBLE COVER PLATE ASSEMBLY | SPR0125 |
| 7 | INTERNAL CIRCLIP 26mm | VMS007 | 17 | SLP 28mm THIMBLE END SUPPORT | VMPP726 | 27 | LAMP 205 WATT UP ANALGUM (REBADI) | VMMP2318 |
| 8 | INTERNAL CIRCLIP 10mm | VNBW728 | 18 | SLP SPRING PLUNGER | VMPP055 | 28 | WIPER MOTOR GEARHEAD 200RPM | VMS779 |
| 9 | WIPER DRIVE SHAFT SEAL TYPE 19 | VSPR701 | 19 | RETURN SPRING 1.6mm ID X 2.44 SECT | VMMP2035 | 29 | MOTOR + CAPACITOR 230V 50/60HZ 90W 7uF | VMS777 |
| 10 | WIPER DRIVE SHAFT SEAL COLLAR | VMMP771 | 20 | WIPER SHAFT END SUPPORT | VMPP727 | | | |

* IF SYSTEM IS FOR WASTE WATER APPLICATIONS PLEASE CONSULT TRIOGEN FOR THE APPROPRIATE SENSOR

## 9.2 Reactor spare parts triogen® UV SLP 20

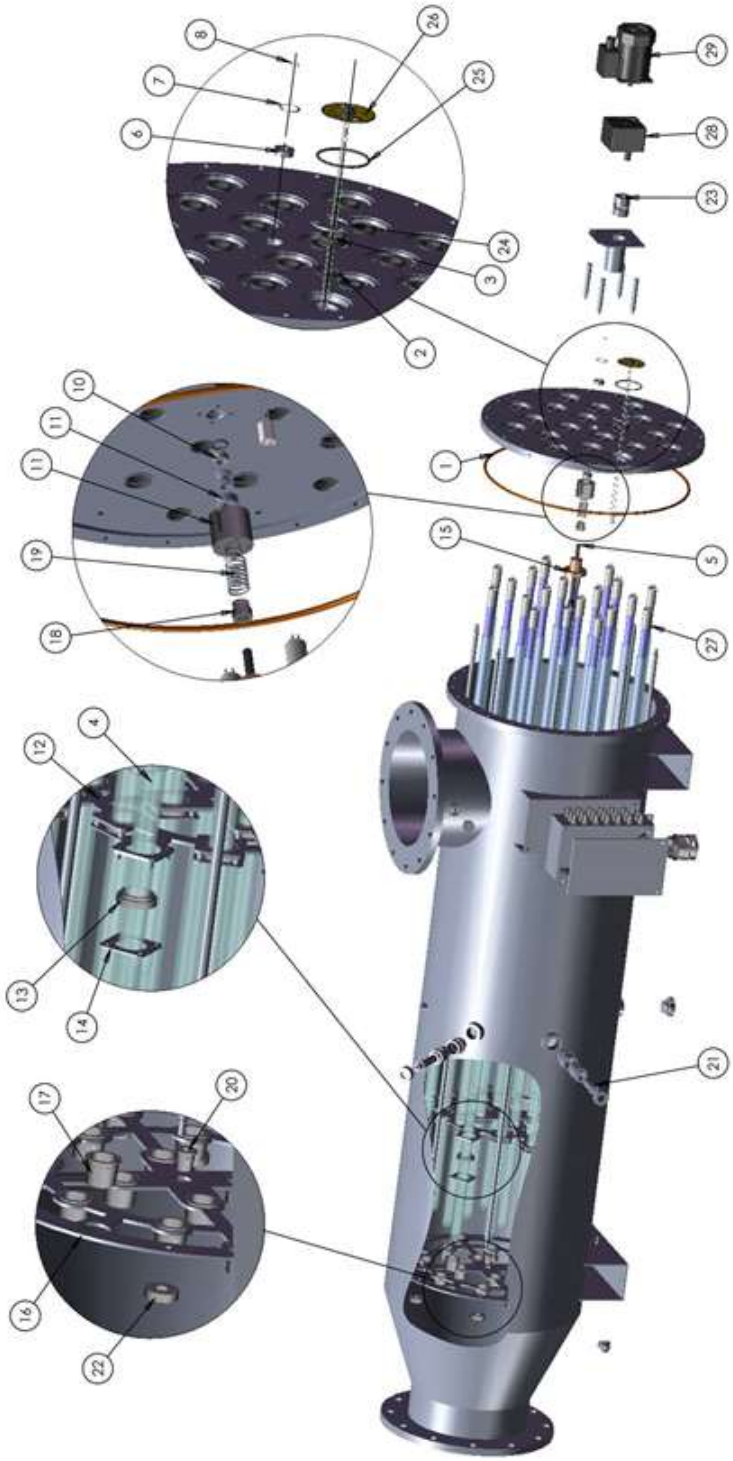

| ITEM No. | PART DESCRIPTION | PART No. | ITEM No. | PART DESCRIPTION | PART No. | ITEM No. | PART DESCRIPTION | PART No. |
|---|---|---|---|---|---|---|---|---|
| 1 | O-RING RED SIL 70 - 315 X 6.99 | VVOR733 | 11 | SLP SPRING SUPPORT BUSH | VMPP050 | 21 | 1" UV SENSOR * | VEPM019 |
| 2 | O-RING RED SIL 70 28 X 5 SECT | VVOR784 | 12 | SLP500-20 WIPER PLATE | VMMP2274 | 22 | SLP500 END SUPPORT PLATE SPACERS | VMPP734 |
| 3 | SLP THIMBLE REPAINING RING | VMPP052 | 13 | 28mm WIPER RING + O-RING (VVOR739) | VMPP725 | 23 | MOTOR/DRIVE SHAFT KEY ASSEMBLY | SPR0130 |
| 4 | QUARTZ THIMBLE DOMED END 28mm O.D. X 1.5mm WALL | VANC018 | 14 | SLP WIPER RING CLAMP PLATE | VMMP2193 | 24 | SLP THIMBLE O-RING CLAMP PLATE | VMMP2194 |
| 5 | SLP 500 DRIVE SHAFT | VMMP2329 | 15 | SLP FLANGED BUSHING NUT | VMMP2222 | 25 | O-RING NITRILE 65 ID X 2.5 SECT | VVOR738 |
| 6 | DRIVE SHAFT MOTOR END BEARING | VMM740 | 16 | SLP500-20 THIMBLE SUPPORT PLATE | VMMP2273 | 26 | SLP500 THIMBLE COVER PLATE ASSEMBLY | SPR0129 |
| 7 | INTERNAL CIRCLIP 28mm | VMM007 | 17 | SLP 28mm THIMBLE END SUPPORT | VMPP726 | 27 | LAMP 205 WATT LP AMALGUM (HERAEUS) | VMMP2318 |
| 8 | INTERNAL CIRCLIP 10mm | VNBW728 | 18 | SLP SPRING PLUNGER | VMPP055 | 28 | WIPER MOTOR GEARHEAD 200RPM | VMM579 |
| 9 | WIPER DRIVE SHAFT SEAL TYPE 19 | VSPR701 | 19 | RETURN SPRING 1.6mm ID X 2.44 SECT | VMMP2005 | 29 | MOTOR + CAPACITOR 230V 50/60HZ 90W 7uF | VMM577 |
| 10 | WIPER DRIVE SHAFT SEAL COLLAR | VMMP771 | 20 | WIPER SHAFT END SUPPORT | VMPP727 | | | |

* IF SYSTEM IS FOR WASTER WATER APPLICATIONS PLEASE CONSULT TRIOGEN FOR APPROPRIATE SENSOR

# 10. Warranty

The UV systems (UV reactor and electrical control panel) are covered by a twelve month limited warranty period starting at the date of purchase, during which time any failure of the equipment due to defective workmanship or parts, will be rectified provided that:

1. Notice of the claimed defect is given to the manufacturer within twelve (12) months from the documented date of purchase.
2. Following notification, the parts or accessories are properly packaged and returned to the address so designated by the manufacturer, and that associated transportation and any other charges are prepaid.
3. Upon inspection, the manufacturer is satisfied that the claimed defects are traceable to the original parts or workmanship.

The warranty will be deemed void, if the equipment is serviced by other than a trained service engineer acknowledged by, or employed by, the supplier, or if the equipment has not been properly installed or operated according to the instructions in this manual.

In no event shall the manufacturer be liable for any consequential loss, damage or expense arising from the supply and use of the equipment, either separately or in combination with other equipment.

The low pressure UV lamps are guaranteed for up to 12000 service hours when operated continuously, based on a maximum of 3 ON/OFF cycles per day.

The lamps have a full replacement warranty up to 2000 hours and a pro-rata price reduction on the cost of replacement lamps up to 12000 hours.

Lamps must be operated as specified, in a manner for which they were designed and must be returned, as noted above, for replacement lamp credit determination

## 11. Disposal

For disposal of the following materials which form sub-components of the triogen® UV LPTS system, such as:

- Electronic printed circuit boards
- Plastics such as PTFE, PVDF, PE, PVC, Plexiglas (pipelines, conduits, cable channels, electrical components)
- Non-ferrous metals such as nickel, brass, copper (fittings, rails, cables)
- Stainless or titanium materials etc.
- UV lamps containing glass and small amounts of mercury.

These should be disposed of in line with local government regulations such as WEEE.

## 12. CE Conformity

### CE DECLARATION OF CONFORMITY

in accordance with CE guidelines:
Machinery Directive 2006/42/EC EMC Directive 2014/30/EU

**TYPE OF APPARATUS**

Article : Low Pressure UV Type : triogen® UV SLP

The above has been developed, designed and manufactured in accordance with referred EU guidelines by:
Company: SUEZ Purification and Disinfection Systems Ltd, Langlands Place, East Kilbride, Scotland, G75 0YF

**THE FOLLOWING HARMONISED STANDARDS WERE APPLIED:**

| | |
|---|---|
| EN 12100:2010 | Safety of machinery. General principles for design. Risk assessment and risk education. |
| EN 60204-1:2006 +A1:2009 | Safety of machinery - Electrical equipment of machines. General requirements. |
| EN 60664-1:2007 | Insulation coordination for equipment within low-voltage systems. Principles, requirements and tests. |
| EN 55011:2016 | Industrial, scientific and medical equipment. Radio-frequency disturbance characteristics. Limits and methods of measurement. |
| EN 61000-6-2:2005 | Electromagnetic compatibility (EMC). Generic standards. Immunity for industrial environments. |
| EN 61000-6-4:2007 +A1:2011 | Electromagnetic compatibility (EMC). Generic standards. Emission standard for Industrial environments. |
| EN 61000-4-2:2009 | Electromagnetic compatibility (EMC). Testing and measurement techniques. Electrostatic discharge immunity test. |
| EN 61000-4-4:2012 | Electromagnetic compatibility (EMC). Testing and measurement techniques. Electrical fast transient/burst immunity test. |

Place and date: East Kilbride, 29th July 2016

| | | |
|---|---|---|
| | *T A Kelly* | *M McKenna* |
| SUEZ Purification: and Disinfection Systems Ltd | Managing Director | Product Engineering Manager |

# 76-100 Series

## Stainless Steel Ball Valve

## 1/4" - 1"

Threaded, 2000 psig WOG. (See referenced P/T chart)
Cold Non-Shock. 150 psig Saturated Steam, Vacuum Service to 29 inches Hg.
Federal Specification: WW-V-35C, Type: II, Composition: SS, Style: 3.
MSS SP-110; Ball Valves Threaded, Socket-Welding, Solder Joint, Grooved and Flared Ends.

## FEATURES

- Investment cast components
- Reinforced seats
- Mounting pad for easy actuator mounting
- Blow-out-proof stem design
- NSF-372, Drinking Water System Components - Lead Content
- Adjustable packing gland
- Meets NACE MR-01-75
- SS lever and nut
- (-24) Certified to API 607, 5th Edition, Class 600 burn
- NSF/ANSI 61 (2010) Section 8, Annex F & G

## STANDARD MATERIAL LIST

| | |
|---|---|
| 1. Lever and grip | 304 SS w/vinyl |
| 2. Stem packing | MPTFE |
| 3. Stem bearing | RPTFE |
| 4. Ball | A276-316 |
| 5. Seat (2) | RPTFE |
| 6. Retainer | A351-CF8M |
| 7. Gland nut | A276-316 |
| 8. Stem | A276-316 |
| 9. Lever nut | 18-8 SS |
| 10. Body seal | PTFE |
| 11. Body | A351-CF8M |

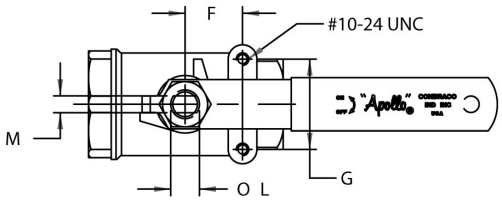


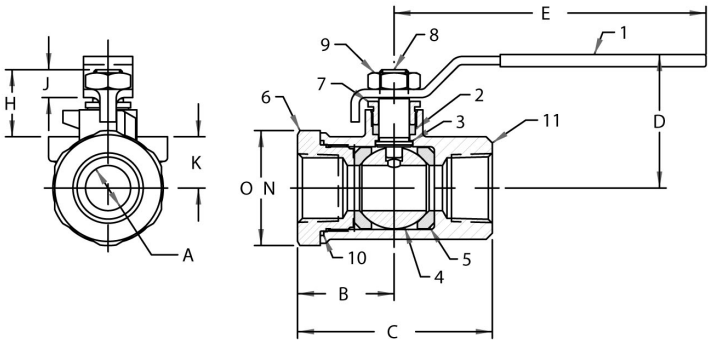


## OPTIONS AVAILABLE:

| SUFFIX) | OPTION | SIZES |
|---|---|---|
| -02- | Stem Grounded | 1/4" to 3" |
| -04- | 2-1/4" CS Stem Extension | 1/4" to 3" |
| -07- | Steel Tee Handle | 1/4" to 2" |
| -08- | 90° Reversed Stem | 1/4" to 3" |
| -14- | Side Vented Ball (Uni-Directional) | 1/4" to 2" |
| -15- | Wheel Handle, Steel | 1/4" to 2" |
| -16- | Chain Lever - Vertical | 3/4" to 2" |
| -19- | Lock Plate | 1/4" to 2" |
| -21- | UHMWPE Trim (Non-PTFE) | 1/4" to 3" |
| -24- | Graphite Packing | 1/4" to 3" |
| -27- | SS Latch-Lock Lever & Nut | 1/4" to 3" |
| -30- | Cam-Lock and Grounded | 1/4" to 2" |
| -32- | SS Tee Handle & Nut | 1/4" to 2" |
| -35- | VTFE Trim | 1/4" to 3" |
| -39- | SS Hi-Rise Locking Wheel Handle, SS Nut | 1/4" to 2" |
| -40- | Cyl-Loc and Grounded | 1/4" to 2" |
| -44- | Seal Welded | 1/4" to 2" |
| -45- | Less Lever & Nut | 1/4" to 3" |
| -46- | Latch Lock Lever - Lock in Closed Position Only | 1/4" to 3" |
| -47- | SS Latch Lock Oval Handle | 1/4" to 1" |
| -48- | SS Oval Handle (No Latch) & Nut | 1/4" to 2" |
| -49- | Assembled Dry | 1/4" to 3" |
| -50- | 2-1/4" CS Locking Stem Extension | 1/4" to 3" |
| -57- | Oxygen Cleaned | 1/4" to 3" |
| -58- | Chain Lever - Horizontal | 3/4" to 2" |
| -60- | Static Grounded Ball & Stem | 1/4" to 3" |
| -64- | 250# Steam Trim | 1/4" to 3" |
| -P01- | BSPP (Parallel) Thread Connection | 1/4" to 3" |
| -T01- | BSPT (Tapered) Thread Connection | 1/4" to 3" |

STAINLESS STEEL BALL VALVE

| NUMBER | SIZE | A | B | C | D | E | F | G | H | J | K | L | M | N | WT. |
|---|---|---|---|---|---|---|---|---|---|---|---|---|---|---|---|
| 76-101-01A | 1/4" | .37 | 1.02 | 2.05 | 1.71 | 3.85 | .50 | 1.12 | .88 | .34 | .53 | .375 | .234 | 1.16 | .58 |
| 76-102-01A | 3/8" | .37 | 1.02 | 2.05 | 1.71 | 3.85 | .50 | 1.12 | .88 | .34 | .53 | .375 | .234 | 1.16 | .55 |
| 76-103-01A | 1/2" | .50 | 1.12 | 2.23 | 1.79 | 3.85 | .50 | 1.12 | .90 | .34 | .59 | .375 | .234 | 1.38 | .63 |
| 76-104-01A | 3/4" | .68 | 1.47 | 2.96 | 2.03 | 4.75 | .87 | 1.37 | 1.02 | .42 | .78 | .437 | .256 | 1.75 | 1.30 |
| 76-105-01A | 1" | .87 | 1.67 | 3.34 | 2.16 | 4.75 | .87 | 1.37 | 1.02 | .42 | .91 | .437 | .256 | 1.94 | 1.60 |

**For Pressure/Temperature Ratings, Refer to Page M-12, Graph No. 14**



COPYRIGHT ©2011 APOLLO VALVES, MANUFACTURED BY CONBRACO INDUSTRIES – PRINTED IN U.S.A.

# 76-100 Series

## Stainless Steel Ball Valve
## 1-1/4" - 2"

Threaded, 1500 psig WOG. (See referenced P/T chart)
Cold Non-Shock. 150 psig Saturated Steam, Vacuum Service to 29 inches Hg.
Federal Specification: WW-V-35C, Type: II, Composition: SS, Style: 3.
MSS SP-110; Ball Valves Threaded, Socket-Welding, Solder Joint, Grooved and Flared Ends.

## FEATURES

- Investment cast components
- Reinforced seats
- Mounting pad for easy actuator mounting
- Blow-out-proof stem design
- NSF/ANSI 61 (2010) Section 8, Annex F & G
- NSF-372, Drinking Water System Components - Lead Content
- Adjustable packing gland
- Meets NACE MR-01-75
- SS lever and nut
- (-24) Certified to API 607, 5th Edition, Class 600 burn

## STANDARD MATERIAL LIST

| | | | |
|---|---|---|---|
| 1. Lever and grip | 304 SS w/vinyl | 7. Gland nut | A276-316 |
| 2. Stem packing | MPTFE | 8. Stem | A276-316 |
| 3. Stem bearing | RPTFE | 9. Lever nut | 18-8 SS |
| 4. Ball | A276-316 | 10. Body seal | PTFE |
| 5. Seat (2) | RPTFE | 11. Body | A351-CF8M |
| 6. Retainer | A351-CF8M | | |

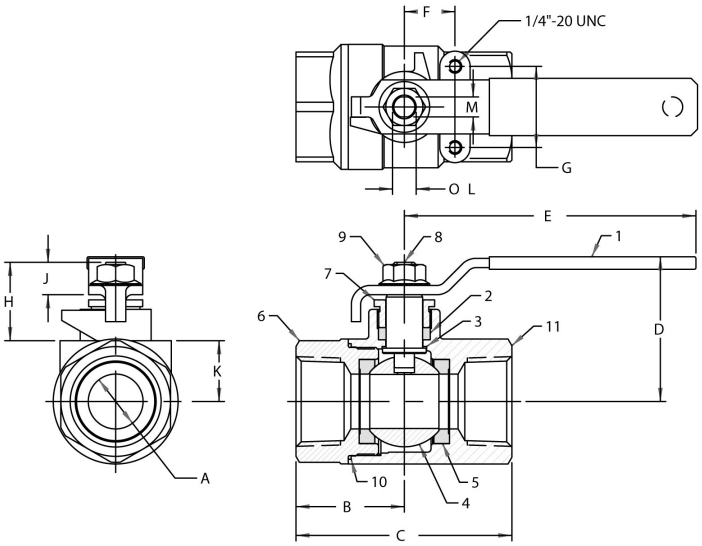


## OPTIONS AVAILABLE:

| SUFFIX) | OPTION | SIZES |
|---|---|---|
| -02- | Stem Grounded | 1/4" to 3" |
| -04- | 2-1/4" CS Stem Extension | 1/4" to 3" |
| -07- | Steel Tee Handle | 1/4" to 2" |
| -08- | 90° Reversed Stem | 1/4" to 3" |
| -14- | Side Vented Ball (Uni-Directional) | 1/4" to 2" |
| -15- | Wheel Handle, Steel | 1/4" to 2" |
| -16- | Chain Lever - Vertical | 3/4" to 2" |
| -19- | Lock Plate | 1/4" to 2" |
| -21- | UHMWPE Trim (Non-PTFE) | 1/4" to 3" |
| -24- | Graphite Packing | 1/4" to 3" |
| -27- | SS Latch-Lock Lever & Nut | 1/4" to 3" |
| -30- | Cam-Lock and Grounded | 1/4" to 2" |
| -32- | SS Tee Handle & Nut | 1/4" to 2" |
| -35- | VTFE Trim | 1/4" to 3" |
| -39- | SS Hi-Rise Locking Wheel Handle, SS Nut | 1/4" to 2" |
| -40- | Cyl-Loc and Grounded | 1/4" to 2" |
| -44- | Seal Welded | 1/4" to 2" |
| -45- | Less Lever & Nut | 1/4" to 3" |
| -46- | Latch Lock Lever - Lock in Closed Position Only | 1/4" to 3" |
| -47- | SS Latch Lock Oval Handle | 1/4" to 1" |
| -48- | SS Oval Handle (No Latch) & Nut | 1/4" to 2" |
| -49- | Assembled Dry | 1/4" to 3" |
| -50- | 2-1/4" CS Locking Stem Extension | 1/4" to 3" |
| -57- | Oxygen Cleaned | 1/4" to 3" |
| -58- | Chain Lever - Horizontal | 3/4" to 2" |
| -60- | Static Grounded Ball & Stem | 1/4" to 3" |
| -64- | 250# Steam Trim | 1/4" to 3" |
| -P01- | BSPP (Parallel) Thread Connection | 1/4" to 3" |
| -T01- | BSPT (Tapered) Thread Connection | 1/4" to 3" |

| NUMBER | SIZE | A | B | C | D | E | F | G | H | J | K | L | M | WT. |
|---|---|---|---|---|---|---|---|---|---|---|---|---|---|---|
| 76-106-01 | 1-1/4" | 1.00 | 2.00 | 4.00 | 2.68 | 5.40 | .94 | 1.50 | 1.50 | .60 | 1.12 | .625 | .377 | 3.10 |
| 76-107-01 | 1-1/2" | 1.25 | 2.17 | 4.34 | 3.25 | 7.75 | .94 | 1.50 | 1.50 | .60 | 1.28 | .625 | .377 | 4.20 |
| 76-108-01 | 2" | 1.50 | 2.69 | 5.43 | 3.24 | 7.75 | .94 | 1.50 | 1.46 | .60 | 1.50 | .625 | .377 | 6.10 |

**For Pressure/Temperature Ratings, Refer to Page M-11, Graph No. 12**

COPYRIGHT ©2011 APOLLO VALVES, MANUFACTURED BY CONBRACO INDUSTRIES – PRINTED IN U.S.A.

# 76-100 Series

## Stainless Steel Ball Valve

## 2-1/2" - 3"

Threaded, 1000 psig WOG. (See referenced P/T chart)
Cold Non-Shock. 150 psig Saturated Steam, Vacuum Service to 29 inches Hg.
Federal Specification: WW-V-35C, Type: II, Composition: SS, Style: 3.
MSS SP-110; Ball Valves Threaded, Socket-Welding, Solder Joint, Grooved and Flared Ends.

## FEATURES

- Investment cast components
- Reinforced seats
- Mounting pad for easy actuator mounting
- Blow-out-proof stem design
- NSF/ANSI 61 (2010) Section 8, Annex F & G
- NSF-372, Drinking Water System Components - Lead Content
- Adjustable packing gland
- Meets NACE MR-01-75
- SS lever and nut
- (-24) Certified to API 607, 5th Edition, Class 600 burn

## STANDARD MATERIAL LIST

| | | | |
|---|---|---|---|
| 1. Lever and grip | 304 SS w/vinyl | 7. Gland nut | A276-316 |
| 2. Stem packing | MPTFE | 8. Stem | A276-316 |
| 3. Stem bearing | RPTFE | 9. Lever nut | 18-8 SS |
| 4. Ball | A276-316 | 10. Body seal | PTFE |
| 5. Seat (2) | RPTFE | 11. Body | A351-CF8M |
| 6. Retainer | A351-CF8M | | |

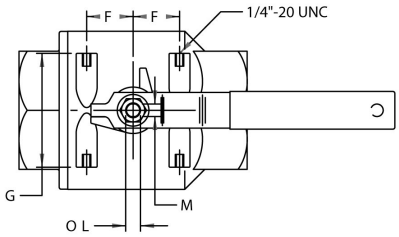


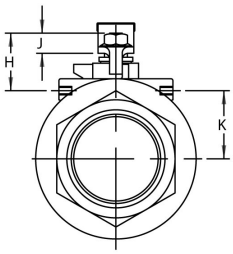


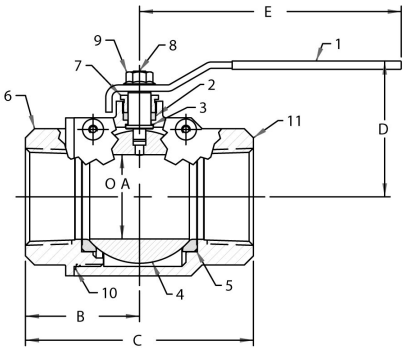


## OPTIONS AVAILABLE:

| SUFFIX) | OPTION | SIZES |
|---|---|---|
| -02- | Stem Grounded | 1/4" to 3" |
| -04- | 2-1/4" CS Stem Extension | 1/4" to 3" |
| -07- | Steel Tee Handle | 1/4" to 2" |
| -08- | 90° Reversed Stem | 1/4" to 3" |
| -14- | Side Vented Ball (Uni-Directional) | 1/4" to 2" |
| -15- | Wheel Handle, Steel | 1/4" to 2" |
| -16- | Chain Lever - Vertical | 3/4" to 2" |
| -19- | Lock Plate | 1/4" to 2" |
| -21- | UHMWPE Trim (Non-PTFE) | 1/4" to 3" |
| -24- | Graphite Packing | 1/4" to 3" |
| -27- | SS Latch-Lock Lever & Nut | 1/4" to 3" |
| -30- | Cam-Lock and Grounded | 1/4" to 2" |
| -32- | SS Tee Handle & Nut | 1/4" to 2" |
| -35- | VTFE Trim | 1/4" to 3" |
| -39- | SS Hi-Rise Locking Wheel Handle, SS Nut | 1/4" to 2" |
| -40- | Cyl-Loc and Grounded | 1/4" to 2" |
| -44- | Seal Welded | 1/4" to 2" |
| -45- | Less Lever & Nut | 1/4" to 3" |
| -46- | Latch Lock Lever - Lock in Closed Position Only | 1/4" to 3" |
| -47- | SS Latch Lock Oval Handle | 1/4" to 1" |
| -48- | SS Oval Handle (No Latch) & Nut | 1/4" to 2" |
| -49- | Assembled Dry | 1/4" to 3" |
| -50- | 2-1/4" CS Locking Stem Extension | 1/4" to 3" |
| -57- | Oxygen Cleaned | 1/4" to 3" |
| -58- | Chain Lever - Horizontal | 3/4" to 2" |
| -60- | Static Grounded Ball & Stem | 1/4" to 3" |
| -64- | 250# Steam Trim | 1/4" to 3" |

| NUMBER | SIZE | A | B | C | D | E | F | G | H | J | K | L | M | WT. |
|---|---|---|---|---|---|---|---|---|---|---|---|---|---|---|
| 76-109-01 | 2-1/2" | 2.50 | 3.38 | 6.75 | 4.03 | 7.75 | 1.38 | 3.37 | 1.71 | .60 | 2.00 | .625 | .377 | 15.60 |
| 76-100-01 | 3" | 2.50 | 3.38 | 6.75 | 4.03 | 7.75 | 1.38 | 3.37 | 1.71 | .60 | 2.00 | .625 | .377 | 16.50 |

**For Pressure/Temperature Ratings, Refer to Page M-10, Graph No. 8**



COPYRIGHT ©2011 APOLLO VALVES, MANUFACTURED BY CONBRACO INDUSTRIES – PRINTED IN U.S.A.

# FLOW DATA

## For Apollo® Ball Valves

The listed Cv "factors" are derived from actual flow testing, in the Apollo® Ball Valve Division, Conbraco Industries, Inc., Pageland, South Carolina. These tests were completed using standard "off the shelf" valves with no special preparation and utilizing standard schedule 40 pipe. It should be understood that these factors are for the valve only and also include the connection configuration. The flow testing is done utilizing water as a fluid media and is a direct statement of the gallons of water flowed per minute with a 1 psig pressure differential across the valve/connection unit. Line pressure is not a factor. Because the Cv is a factor, the formula can be used to estimate flow of most media for valve sizing.

### Flow of Liquid

$$Q = Cv\sqrt{\frac{\Delta P}{SpGr}}$$

$$\text{or } \Delta P = \frac{(Q)^2\,(SpGr)}{(Cv)^2}$$

Where:
Q = flow in US gpm
ΔP = pressure drop (psig)
SpGr = specific gravity at flowing temperature
Cv = valve constant

### Flow of Gas

$$Q = 1360\ Cv\sqrt{\frac{(\Delta P)\,(P_1)}{(SpGr)\,(T)}}$$

$$\text{or } \Delta P = \frac{5.4 \times 10^{-7}\,(SpGr)\,(T)\,(Q)^2}{(Cv)^2\,(P_2)}$$

Where:
Q = flow in SCFH
ΔP = pressure drop (psig)
SpGr = specific gravity (based on air = 1.0)
$P_2$ = outlet pressure–psia (psig + 14.7)
T = (temp. °F + 460)
Cv = valve constant

**Cv FACTORS FOR APOLLO VALVES**

| Valve Size (inches) | 1/4 | 3/8 | 1/2 | 3/4 | 1 | 1-1/4 | 1-1/2 | 2 | 2-1/2 | 3 | 4 | 6 | 8 | 10 | 12 |
|---|---|---|---|---|---|---|---|---|---|---|---|---|---|---|---|
| **Ball Valves** | | | | | | | | | | | | | | | |
| 32-100/200 Series | 5.1 | 6.6 | 8 | 24 | 30 | 45 | 55 | 95 | -- | -- | -- | -- | -- | -- | -- |
| 64-100/200 Series | 6 | 7 | 19 | 34 | 50 | 104 | 268 | 309 | 629 | 1018 | 1622 | -- | -- | -- | -- |
| 64W Series | -- | -- | -- | -- | -- | -- | -- | -- | 629 | 1018 | 1622 | -- | -- | -- | -- |
| 70B-140 Series | 8.4 | 7.2 | 15 | 30 | 43 | 48 | 84 | 108 | 190 | 370 | 670 | -- | -- | -- | -- |
| 70-100/200 Series | 8.4 | 7.2 | 15 | 30 | 43 | 48 | 84 | 108 | 190 | 370 | 670 | -- | -- | -- | --- |
| 70-300/400 Series | -- | -- | 15 | 30 | 43 | 48 | 84 | 108 | -- | -- | -- | -- | -- | -- | -- |
| 70-600 Series | 2.3 | 4.5 | 5.4 | 12 | 14 | 21 | 34 | 47 | -- | -- | -- | -- | -- | -- | -- |
| 70-800 Series | 8.4 | 7.2 | 15 | 30 | 43 | 48 | 84 | -- | -- | -- | -- | -- | -- | -- | -- |
| 71AR Series | -- | -- | -- | 30 | 43 | 48 | 84 | 108 | 190 | 370 | -- | -- | -- | -- | -- |
| 71-100/200 Series | -- | -- | -- | 30 | 43 | 48 | 84 | 108 | 190 | 370 | -- | -- | -- | -- | -- |
| 72-100/900 Series | -- | -- | 26 | 48 | 65 | 125 | 170 | 216 | -- | -- | -- | -- | -- | -- | -- |
| 73A-100 Series | 8.4 | 7.2 | 15 | 30 | 43 | 48 | 84 | 108 | -- | -- | -- | -- | -- | -- | -- |
| 73-300/400 Series | -- | -- | 26 | 48 | 65 | 125 | 170 | 216 | -- | -- | -- | -- | -- | -- | -- |
| 74-100 Series | 8.4 | 7.2 | 15 | 30 | 43 | 48 | 84 | 108 | 190 | 370 | 670 | -- | -- | -- | -- |
| 75-100 Series | 8.4 | 7.2 | 15 | 30 | 43 | 48 | 84 | 108 | 190 | 370 | 670 | -- | -- | -- | -- |
| 76AR Series | 8.4 | 7.2 | 15 | 30 | 43 | 48 | 84 | 108 | 190 | 370 | 670 | -- | -- | -- | -- |
| 76F-100 Series | 8.1 | 15 | 15 | 51 | 68 | 125 | 177 | 389 | -- | -- | -- | -- | -- | -- | -- |
| 76-100 Series | 8.4 | 7.2 | 15 | 30 | 43 | 48 | 84 | 108 | 190 | 370 | -- | -- | -- | -- | -- |
| 76-300/400 Series | -- | -- | 26 | 48 | 65 | 125 | 170 | 216 | -- | -- | -- | -- | -- | -- | -- |
| 76-600 Series | 2.3 | 4.5 | 5.4 | 12 | 14 | 21 | 34 | 47 | -- | -- | -- | -- | -- | -- | -- |
| 7K-100 Series | -- | -- | 15 | 51 | 68 | 125 | 177 | 389 | 503 | -- | -- | -- | -- | -- | -- |
| 77AR Series | 8.1 | 15 | 15 | 51 | 68 | 125 | 177 | 389 | -- | -- | -- | -- | -- | -- | -- |
| 77C-100/200 Series | 4.5 | 7.2 | 16 | 36 | 68 | 125 | 177 | 389 | 503 | -- | -- | -- | -- | -- | -- |
| 77D-140 Series | 4.5 | 7.2 | 16 | 36 | 68 | 125 | 177 | 389 | -- | -- | -- | -- | -- | -- | -- |
| 77D-640 Series | -- | -- | -- | 11 | 24 | 35 | -- | -- | -- | -- | -- | -- | -- | -- | -- |
| 77G-UL Series | 4.5 | 7.2 | 16 | 36 | 68 | 125 | 177 | 389 | 503 | -- | -- | -- | -- | -- | -- |
| 77W Series | -- | -- | 16 | 36 | 68 | 125 | 177 | 389 | -- | -- | -- | -- | -- | -- | -- |
| 77X Series | -- | -- | 16 | 36 | 68 | -- | -- | -- | -- | -- | -- | -- | -- | -- | -- |
| 77-100/200 Series | 8.1 | 15 | 15 | 51 | 68 | 125 | 177 | 389 | 503 | -- | -- | -- | -- | -- | -- |

COPYRIGHT ©2011 APOLLO VALVES, MANUFACTURED BY CONBRACO INDUSTRIES – PRINTED IN U.S.A.

## Cv FACTORS FOR APOLLO VALVES

| Valve Size (inches) | 1/4 | 3/8 | 1/2 | 3/4 | 1 | 1-1/4 | 1-1/2 | 2 | 2-1/2 | 3 | 4 | 6 | 8 | 10 | 12 |
|---|---|---|---|---|---|---|---|---|---|---|---|---|---|---|---|
| **Ball Valves** | | | | | | | | | | | | | | | |
| 79 Series | 8.5 | 8.5 | 9.8 | 32 | 44 | 66 | 148 | 218 | 440 | 390 | -- | -- | -- | -- | -- |
| 80/81 Series | 8.4 | 7.2 | 15 | 30 | 43 | 48 | 84 | 108 | 190 | 370 | -- | -- | -- | -- | -- |
| 82-100/200 Series | 8.1 | 14 | 26 | 51 | 68 | 120 | 170 | 376 | 510 | 996 | 1893 | -- | -- | -- | -- |
| 83A/83B Series | 8.1 | 14 | 26 | 51 | 68 | 120 | 170 | 376 | -- | -- | -- | -- | -- | -- | -- |
| 83R-100/200 Series | -- | -- | -- | -- | -- | -- | 170 | 376 | -- | 996 | 1893 | -- | -- | -- | -- |
| 86A/86B Series | 8.1 | 14 | 26 | 51 | 68 | 120 | 170 | 376 | -- | -- | -- | -- | -- | -- | -- |
| 86R-100/200 Series | -- | -- | -- | -- | -- | -- | 170 | 376 | -- | 996 | 1893 | -- | -- | -- | -- |
| 87A-100 Series | -- | -- | -- | -- | -- | -- | 86 | 104 | 234 | 375 | 673 | 1099 | 1902 | 3890 | -- |
| 87A-200 Series | -- | -- | 15 | 19 | 75 | -- | 195 | 410 | 545 | 1021 | 2016 | 4837 | 9250 | 15170 | 22390 |
| 87A-700 Series | -- | -- | -- | -- | -- | -- | 86 | 104 | 234 | 375 | 673 | 1099 | 1902 | 3890 | -- |
| 87A-900 Series | -- | -- | 15 | 19 | 75 | -- | 195 | 410 | 545 | 1021 | 2016 | 4837 | 9250 | 15170 | 22390 |
| 87B-100 Series | -- | -- | -- | -- | -- | -- | -- | -- | -- | 375 | 673 | 1099 | 1902 | 3890 | -- |
| 88A-100 Series | -- | -- | -- | -- | -- | -- | 86 | 104 | 234 | 375 | 673 | 1099 | 1902 | 3890 | -- |
| 88A-200 Series | -- | -- | 15 | 19 | 75 | -- | 195 | 410 | 545 | 1021 | 2016 | 4837 | 9250 | 15170 | 22390 |
| 88A-700 Series | -- | -- | -- | -- | -- | -- | 86 | 104 | 234 | 375 | 673 | 1099 | 1902 | 3890 | -- |
| 88A-900 Series | -- | -- | 15 | 19 | 75 | -- | 195 | 410 | 545 | 1021 | 2016 | 4837 | 9250 | 15170 | 22390 |
| 88B-100 Series | -- | -- | -- | -- | -- | -- | -- | -- | -- | 375 | 673 | 1099 | 1902 | 3890 | -- |
| 89-100 Series | 8.4 | 7.2 | 15 | 30 | 43 | 48 | 84 | 108 | 190 | 370 | -- | -- | -- | -- | -- |
| 9A-100 Series | 8.3 | 6.7 | 5.7 | 10 | 16 | 25 | 40 | 62 | -- | -- | -- | -- | -- | -- | -- |
| 91-100 Series | 8.3 | 6.7 | 5.7 | 10 | 16 | 25 | 40 | 62 | -- | -- | -- | -- | -- | -- | -- |
| 92-100 Series | 8.3 | 6.7 | 5.7 | 10 | 16 | 25 | 40 | 62 | -- | -- | -- | -- | -- | -- | -- |
| 93-100 Series | 8.3 | 6.7 | 5.7 | 10 | 16 | 25 | 40 | 62 | -- | -- | -- | -- | -- | -- | -- |
| 94A-100/200 Series | 6 | 7 | 19 | 34 | 50 | 104 | 268 | 309 | 629 | 1018 | 1622 | -- | -- | -- | -- |
| 95-100/200 Series | -- | -- | 15 | 51 | 68 | -- | -- | -- | -- | -- | -- | -- | -- | -- | -- |
| 95A-300/400 Series | -- | -- | 19 | 34 | 50 | -- | -- | -- | -- | -- | -- | -- | -- | -- | -- |
| 96-100 Series | 8.3 | 6.7 | 5.7 | 10 | 16 | 25 | 40 | 62 | -- | -- | -- | -- | -- | -- | -- |
| 399-100 Series | 8.4 | 7.2 | 15 | 30 | 43 | 48 | 84 | 108 | 190 | 370 | -- | -- | -- | -- | -- |
| 489-100 Series | 8.4 | 7.2 | 15 | 30 | 43 | 48 | 84 | 108 | 190 | 370 | -- | -- | -- | -- | -- |


COPYRIGHT ©2011 APOLLO VALVES, MANUFACTURED BY CONBRACO INDUSTRIES – PRINTED IN U.S.A.

# 1000# CS P-T Rating
# (Graph 7)

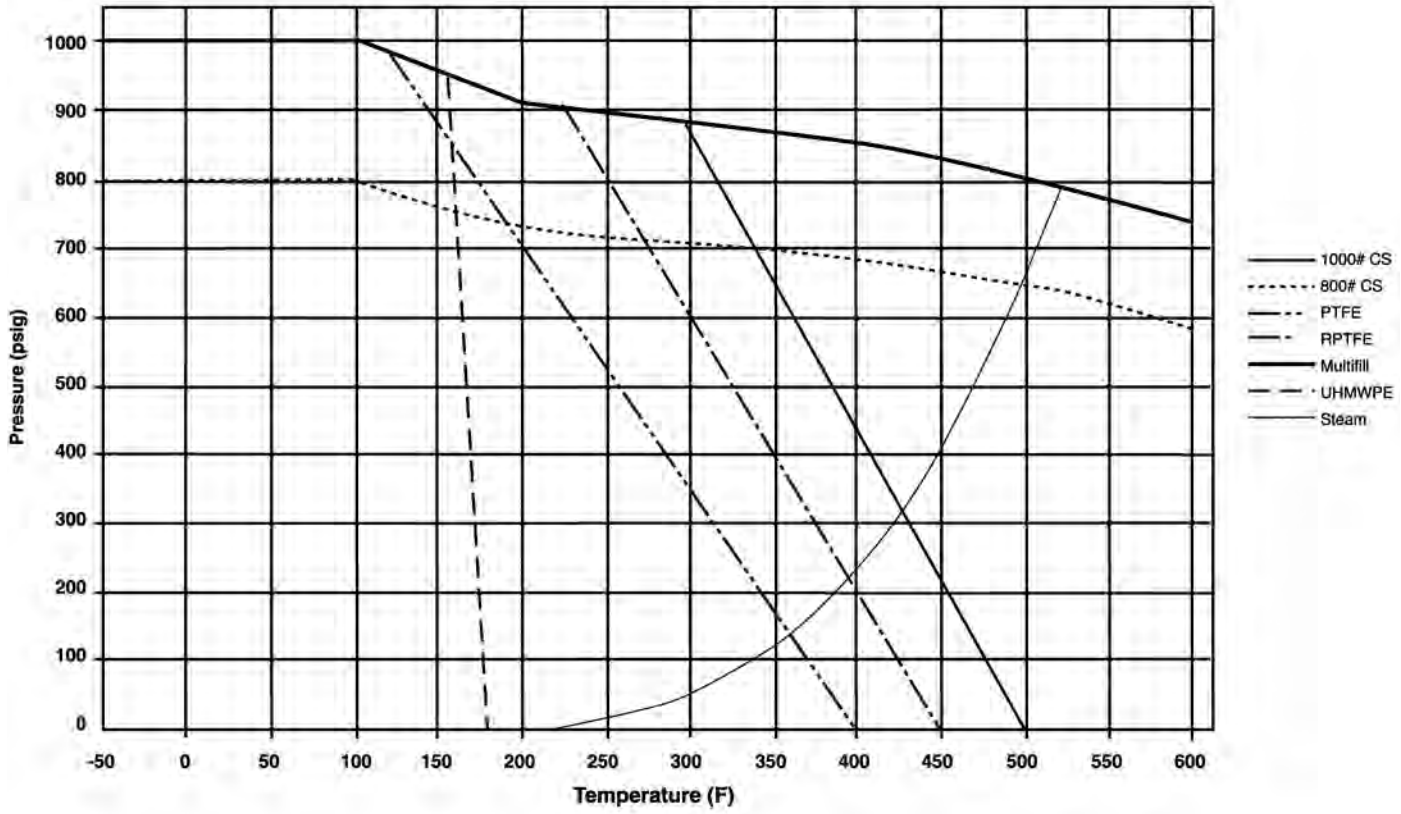


# 1000# SS P-T Rating
# (Graph 8)

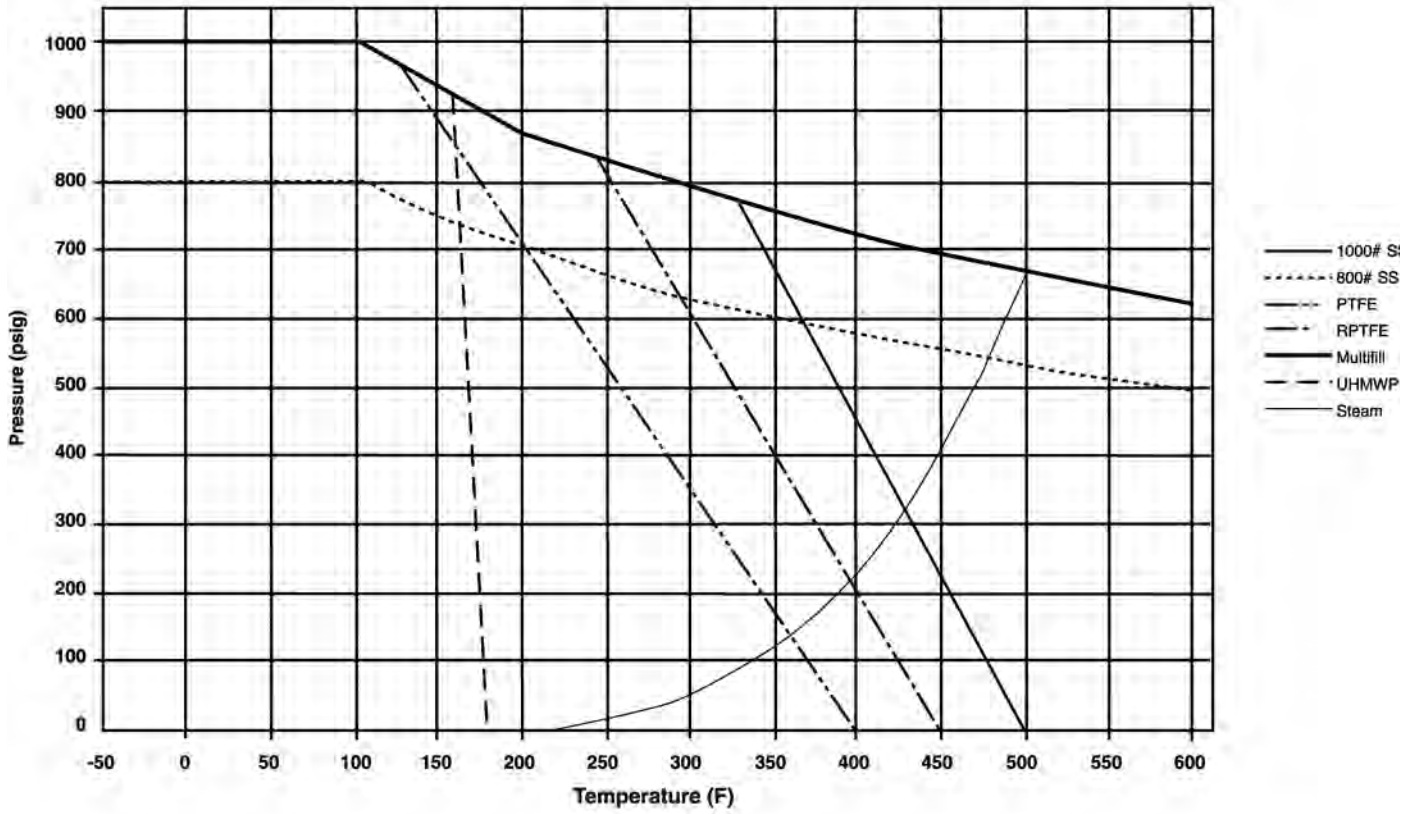



COPYRIGHT ©2011 APOLLO VALVES, MANUFACTURED BY CONBRACO INDUSTRIES – PRINTED IN U.S.A.

# 1500# CS P-T Rating
# (Graph 11)

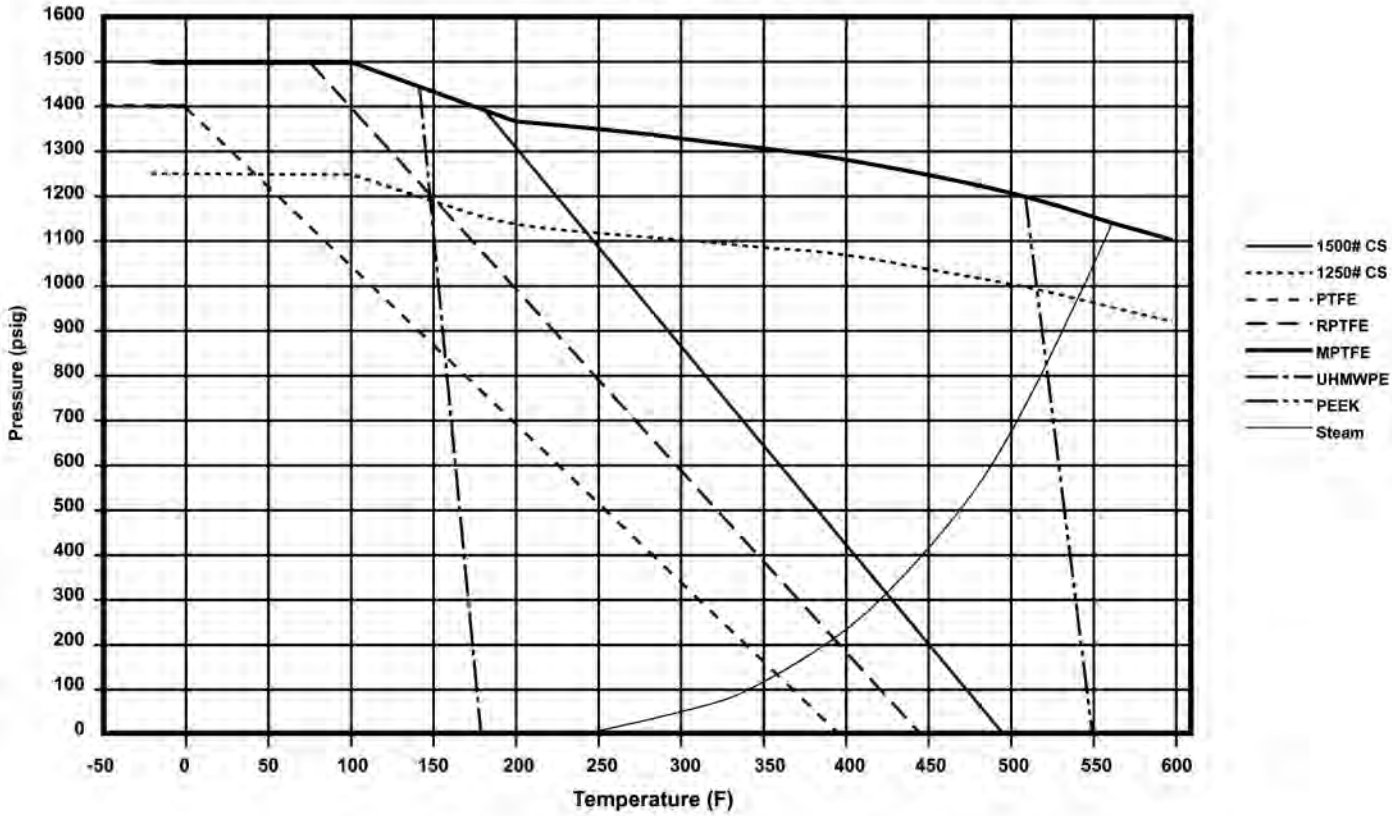


# 1500# SS P-T Rating
# (Graph 12)

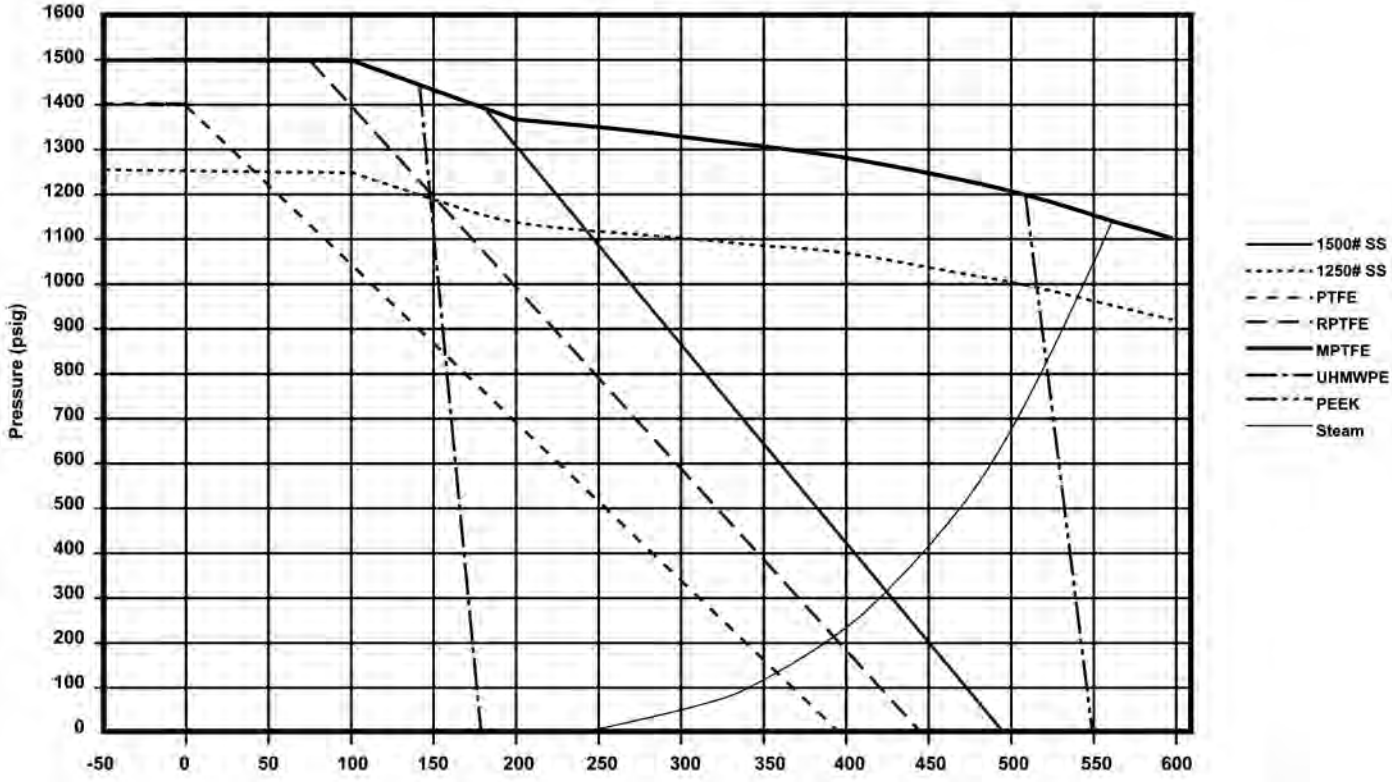


COPYRIGHT ©2011 APOLLO VALVES, MANUFACTURED BY CONBRACO INDUSTRIES – PRINTED IN U.S.A.

## 2000# CS P-T Rating
## (Graph 13)

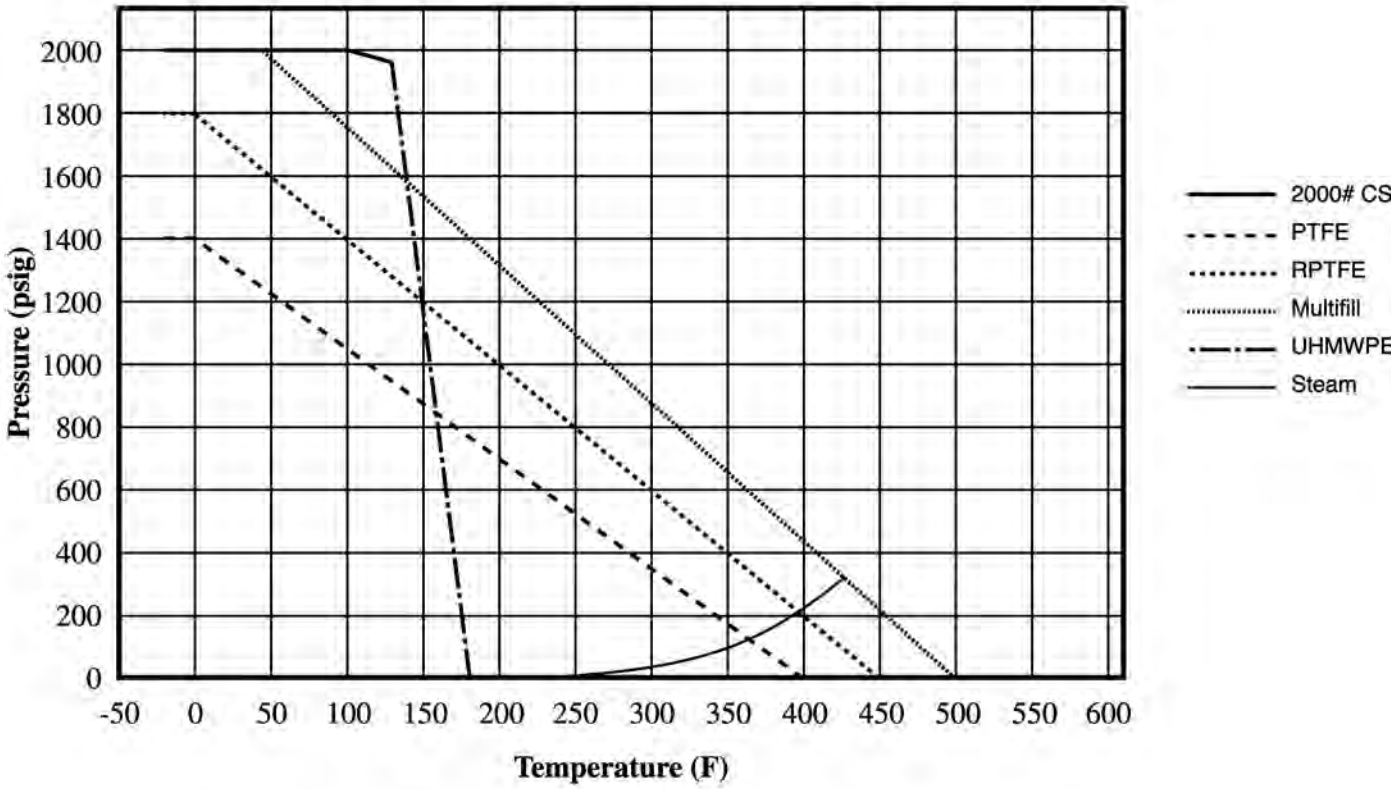


## 2000# SS P-T Rating
## (Graph 14)

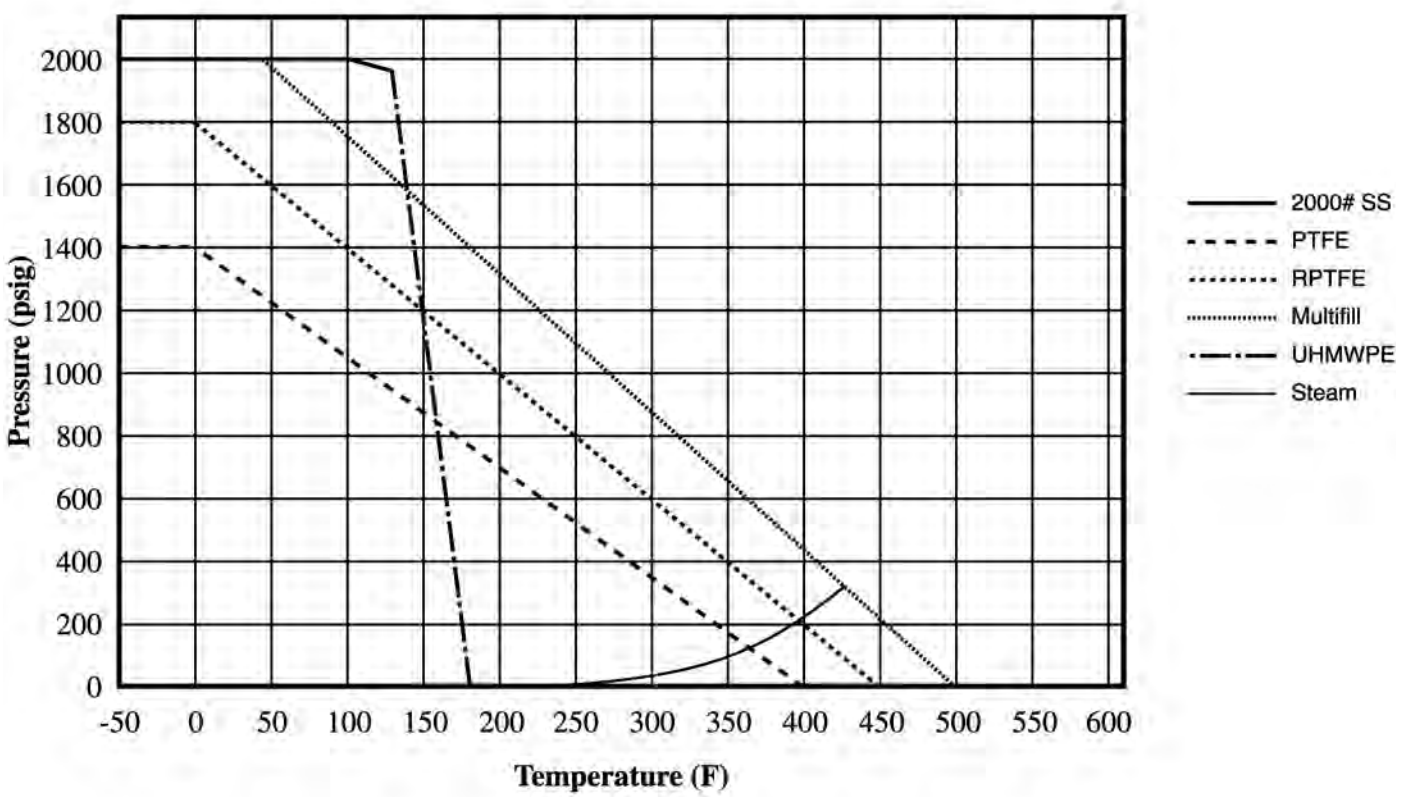



COPYRIGHT ©2011 APOLLO VALVES, MANUFACTURED BY CONBRACO INDUSTRIES – PRINTED IN U.S.A.

# True Union Ball Valve
# Type 546Pro

## General

- **Size**: ⅜"–4"
- **Material**: PVC, CPVC, PROGEF® Standard PP, ABS, SYGEF® Standard PVDF
- **Seat**: PTFE
- **Seals**: EPDM, FPM
- **End Connection**: Solvent cement socket, threaded, flanged, fusion spigot, fusion socket
- **Mounting**: Stainless steel threaded inserts
- **Standard Pack Quantity**: 1 valve

## Key Certifications

- **NSF 61**: PVC and CPVC
- **FDA CFR 21 177.1520**: PP and PVDF
- **FDA CFR 21 177.2600**: EPDM and FPM
- **FDA CFR 21 177.1550**: PTFE
- **USP Class VI (physiological non-toxic)**: EPDM, FPM, PTFE, PP and PVDF
- **ABS**: All materials

## Sample Specification

The Type 546Pro Ball Valve shall be true union and utilize a float-ing ball design. The ball shall be fully molded and full port with two way blocking capability. The stem shall be blowout proof, utilizing a double o-ring seal and a predetermined break point opposite the media side of the stem seals. The seat carrier shall be adjustable and reverse threaded. The handle shall be lockable and double as a seat carrier adjustment or removal tool. The valve nut threads shall be of buttress type. Ball seats shall have an elastomeric backing o-ring and all elastomeric seals shall be of like material. ANSI flanged versions shall meet ANSI B16.5 150lb standards. All valves shall be tested in accordance to ISO9393 and designed to ISO16135 standards. All valves shall be manufactured under ISO9001 for Quality and ISO14001 for Environmental Management. Following assembly, every valve shall be tested and certified bubble tight exceeding Class VI standards.

## Material Specification

PVC valves shall meet ASTM D1784 cell classification 12454 standards. CPVC valves shall meet ASTM D1784 cell classification 23447-B standards. PP valves shall meet ASTM D5847-14 cell classification PP0510B66851 standards. ABS valves shall meet ASTM D3965 cell classification 42222 standards. PVDF valves shall be type 1, grade 2 according to ASTM D3222 standards. Valves of all materials shall be RoHS compliant.

## Components

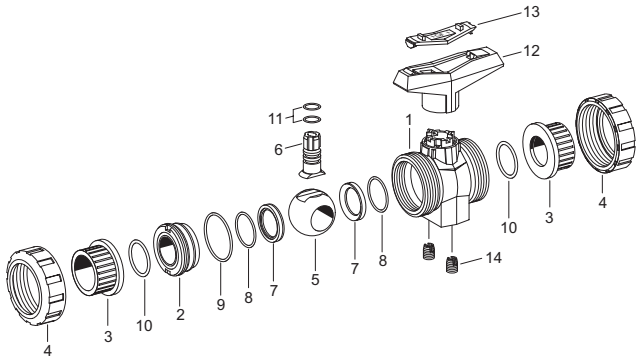


## Key Design Features

The Type 546Pro Ball Valve comes standard with stainless steel threaded inserts for easy and secure mounting. Valves are available without inserts upon request

The Type 546Pro Ball Valve stem utilizes a predetermined break point oppo-site the media side of the stem seals. This break point is a groove with an inner diameter that is less than the stem seal grooves. This ensures that if there is a stem failure, the failure will occur at that point and media will not leak to the outside of the valve.

## Optional Features

- **Actuation**: Electric, pneumatic
- **Limit Switches**: Mechanical, inductive
- **Handle**: Handle extension (PVC or stainless)
- **Mounting pad**: Additional mounting option for valve base
- **Universal Adapter Kit**: ISO mount for actuation
- **Seals**: Alternative materials available upon request
- **Seat**: PVDF
- **End Connection**: Alternatives available upon request
- **Control Ball**: For throttling applications
- **Vented Ball**: For sodium hypochlorite use
- **Cleaned**: Silicone free/oil free

### Valve Components

| Part | Description | Material |
|---|---|---|
| 1 | Valve body | PVC, CPVC, PP, ABS or PVDF |
| 2 | Seat carrier | PVC, CPVC, PP, ABS or PVDF |
| 3 | Valve end | PVC, CPVC, PP, PPn, ABS, PE or PVDF |
| 4 | Valve nut | PVC, CPVC, PP, ABS or PVDF |
| 5 | Ball | PVC, CPVC, PP, ABS or PVDF |
| 6 | Stem | PVC, CPVC, PP, ABS or PVDF |
| 7 | Seat | PTFE |
| 8 | Backing seal | EPDM or FPM |
| 9 | Body seal | EPDM or FPM |
| 10 | Face seal | EPDM or FPM |
| 11 | Stem seal | EPDM or FPM |
| 12 | Handle | Glass-filled PP |
| 13 | Handle clip | Glass-filled PP |
| 14 | Mounting insert | 304 Stainless steel |

The Type 546Pro Ball Valve seat carrier is reverse threaded while the valve nut utilizes a standard thread. This ensures that the seat carrier is not inadvertently tightened when the valve nut is tightened and avoids possible stem failures.

The valve handle doubles as a seat carrier adjustment tool by simply inserting the handle clip into the pre-molded notches on the seat carrier, making on-site maintenance quick and easy.

# Technical Data

## Pressure Temperature Curves

The following graphs are based on a 25 year lifetime water or similar media application

### PVC

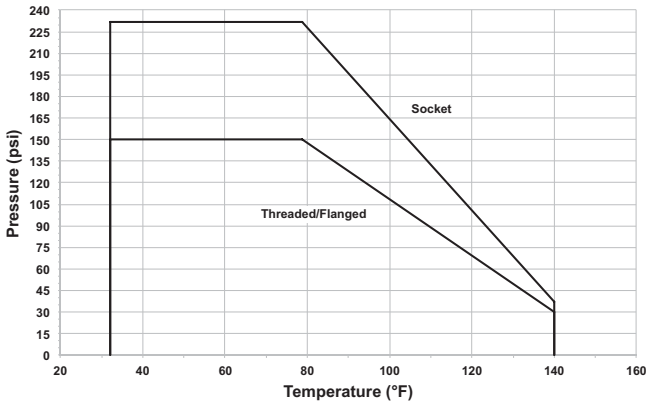


### CPVC

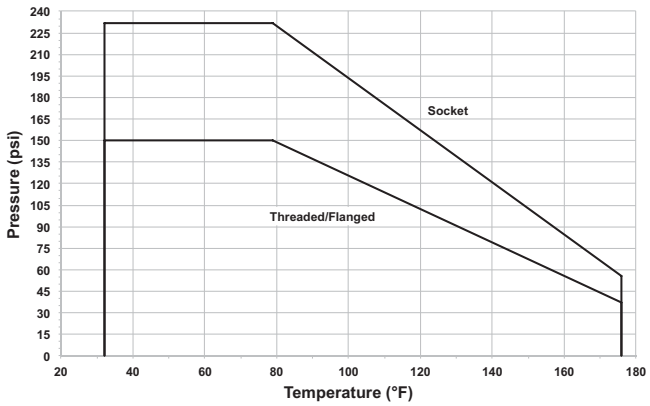


### PP

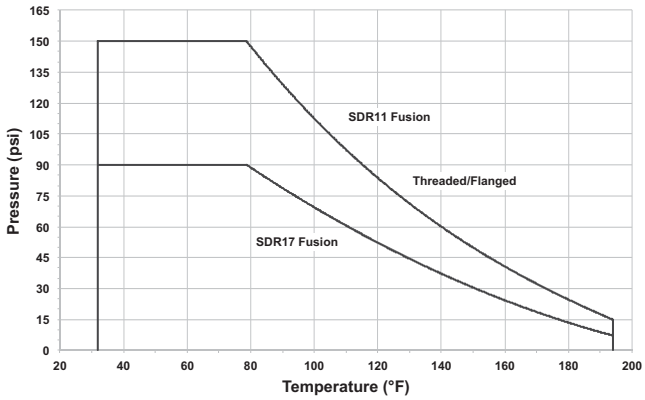


### ABS

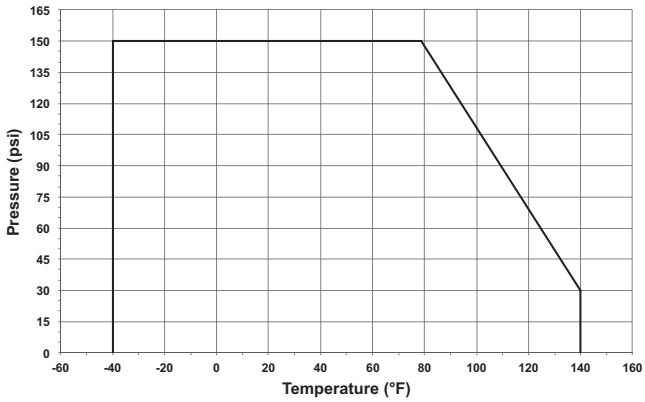


### PVDF

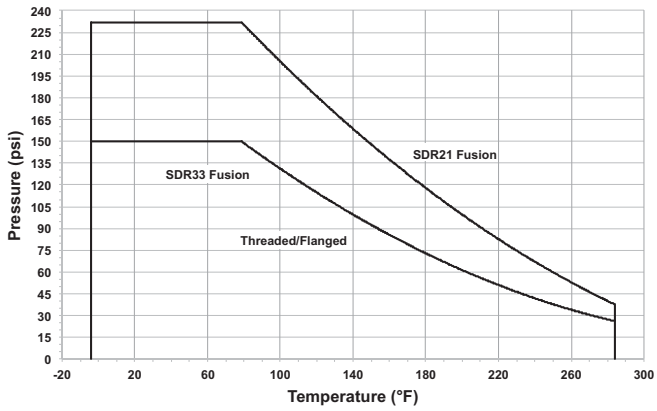


### Pressure-Temperature

| Material | Temperature Range (°F) | Max Pressure (psi) |
|---|---|---|
| PVC | 32 to 140 | 232* |
| CPVC | 32 to 176 | 232* |
| PP | 32 to 176 | 150* |
| ABS | -40 to 140 | 150 |
| PVDF | -4 to 284 | 232* |

*Dependant on end connection as shown in P-T curves

### Vacuum Service

The Type 546Pro is rated for full vacuum service. Maximum differential pressure of 15psi at 122°F.

# Flow

The following information is based on water applications at 68° F

### Flow Characteristics

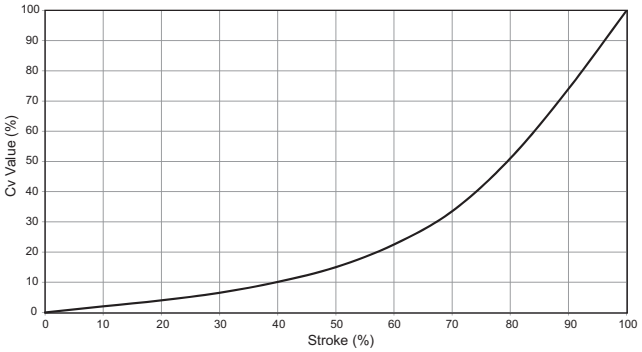


### Cv Value

| Size (inch) | d (mm) | Cv (gal/min) |
|---|---|---|
| ⅜ | 16 | 5 |
| ½ | 20 | 13 |
| ¾ | 25 | 25 |
| 1 | 32 | 49 |
| 1¼ | 40 | 70 |
| 1½ | 50 | 112 |
| 2 | 63 | 217 |
| 2½ | 75 | 350 |
| 3 | 90 | 490 |
| 4 | 110 | 770 |

# Vented Ball: Optional Feature

A vented ball is an optional feature with all variations of the Type 546Pro Ball Valve. This version of the valve has dedicated part numbers that utilize a special ball with a ⅛ inch hole. This ball is designed for applications in which the media requires out-gassing such as sodium hypochlorite. The hole functions as a vent for media that would normally be trapped inside a closed ball. The vent prevents potentially dangerous pressure from building up inside the valve. The vent is located opposite the seat carrier side of the ball valve and this vent is recommended to be installed upstream.

Chemical applications vary from system to system and variations such as concentration, temperature and pressure need to be considered. It is the responsibility of the individual user to verify com-patibility and GF recommends that every application be verified and tested by internal experts or a third party.

# Control Ball: Optional Feature

The Type 546Pro Control Ball is a keyed design and is available in PVC, CPVC, PP and PVDF. This ball is designed for applications requir-ing flow control. The keyed orifice provides a nearly linear flow characteristic curve and is superior to V-notch designs. This ball is not bidirectional. The required installation direction is to have the keyed orifice downstream. The Type 546Pro Control Ball can be added to any Type 546Pro Ball Valve within the available size range.

### Flow Characteristics

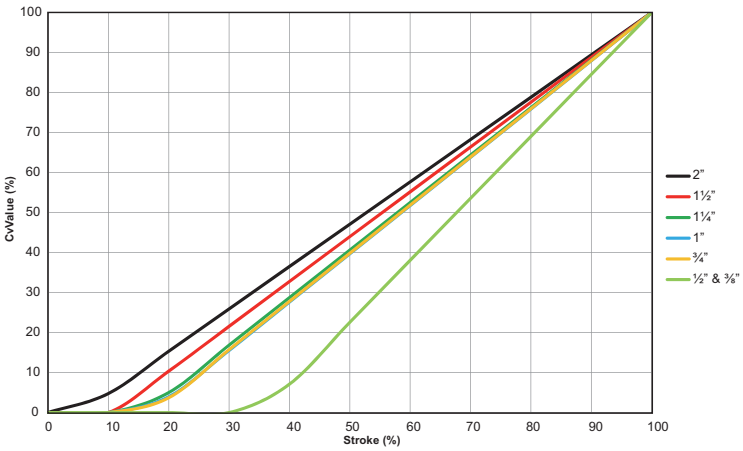


### Cv Value

| Size (inch) | d (mm) | Cv (gal/min) |
|---|---|---|
| ⅜, ½ | 16, 20 | 6.3 |
| ¾ | 25 | 11.6 |
| 1 | 32 | 16.4 |
| 1¼ | 40 | 29.0 |
| 1½ | 50 | 43.6 |
| 2 | 63 | 54.4 |

# Dimensions

The following tables are shown in millimeters unless otherwise specified

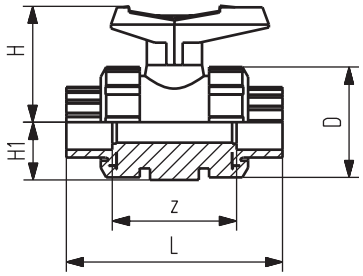


Socket/threaded

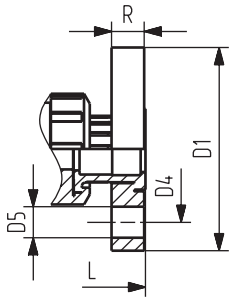


Flanged

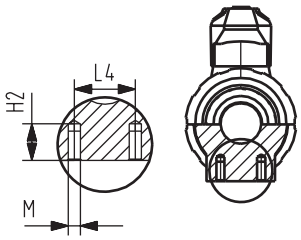


All configurations

## All Materials

| Size (inch) | d (mm) | D | H | H1 | H2 | L4 | M |
|---|---|---|---|---|---|---|---|
| ⅜ | 16 | 50 | 56 | 31 | 4 | 25 | M6 |
| ½ | 20 | 50 | 56 | 31 | 4 | 25 | M6 |
| ¾ | 25 | 58 | 67 | 38 | 5 | 25 | M6 |
| 1 | 32 | 68 | 71 | 45 | 5 | 25 | M6 |
| 1¼ | 40 | 84 | 85 | 54 | 6 | 45 | M8 |
| 1½ | 50 | 97 | 92 | 61 | 6 | 45 | M8 |
| 2 | 63 | 124 | 108 | 73 | 7 | 45 | M8 |
| 2½ | 75 | 166 | 149 | 85 | 15 | 70 | M8 |
| 3 | 90 | 200 | 161 | 105 | 15 | 70 | M8 |
| 4 | 110 | 238 | 178 | 123 | 22 | 120 | M12 |

## PVC/CPVC

| | IPS Socket | | Threaded NPT | | ANSI Flanged | | | | |
|---|---|---|---|---|---|---|---|---|---|
| Size (inch) | L | z | L | z | L | D1 (inch) | D4 (inch) | D5 (inch) | R (inch) |
| ⅜ | 105 | 67 | 98 | 69 | - | - | - | - | - |
| ½ | 105 | 61 | 98 | 65 | 149 | 3.5 | 2.38 | 0.56 | 0.57 |
| ¾ | 121 | 70 | 111 | 74 | 165 | 3.88 | 2.75 | 0.63 | 0.58 |
| 1 | 133 | 76 | 127 | 82 | 184 | 4.25 | 3.13 | 0.63 | 0.66 |
| 1¼ | 154 | 90 | 147 | 98 | 206 | 4.63 | 3.5 | 0.56 | 0.69 |
| 1½ | 164 | 94 | 157 | 110 | 221 | 5 | 3.88 | 0.56 | 0.76 |
| 2 | 183 | 107 | 183 | 135 | 251 | 6 | 4.75 | 0.75 | 0.82 |
| 2½ | 233 | 144 | 234 | 166 | 311 | 7 | 5.5 | 0.75 | 0.98 |
| 3 | 254 | 151 | 255 | 175 | 343 | 7.5 | 6 | 0.75 | 1.02 |
| 4 | 301 | 174 | 302 | 214 | 397 | 9 | 7.5 | 0.75 | 1.11 |

## ABS

| | Metric Socket | |
|---|---|---|
| d (mm) | L | z |
| 16 | 92 | 64 |
| 20 | 95 | 64 |
| 25 | 110 | 72 |
| 32 | 123 | 79 |
| 40 | 146 | 94 |
| 50 | 157 | 95 |
| 63 | 183 | 107 |
| 75 | 233 | 144 |
| 90 | 254 | 151 |
| 110 | 301 | 174 |

# Dimensions

The following tables are shown in millimeters unless otherwise specified

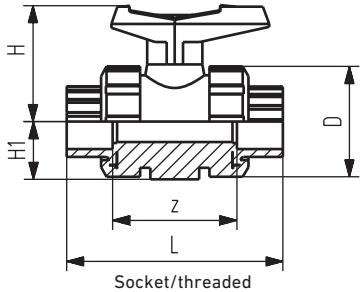

Socket/threaded

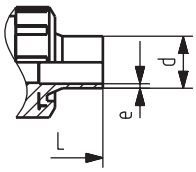

IR/butt fusion

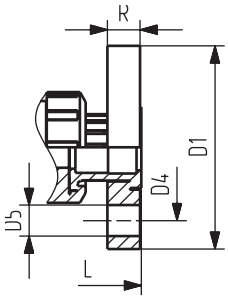

Flanged

**PP**

| | Metric Socket | | Metric IR/Butt | | Threaded NPT | | ANSI Flanged | | | | |
|---|---|---|---|---|---|---|---|---|---|---|---|
| d (mm) | L | z | L | e | L | z | L | D1 (inch) | D4 (inch) | D5 (inch) | R (inch) |
| 16 | 93 | 67 | - | - | 96 | 71 | - | - | - | - | - |
| 20 | 95 | 66 | 130 | 1.9 | 99 | 64 | 166 | 3.74 | 2.36 | 0.63 | 0.63 |
| 25 | 109 | 77 | 143 | 2.3 | 111 | 76 | 177 | 4.13 | 2.76 | 0.63 | 0.67 |
| 32 | 119 | 83 | 150 | 2.9 | 127 | 83 | 191 | 4.53 | 3.11 | 0.63 | 0.71 |
| 40 | 135 | 99 | 171 | 3.7 | 146 | 100 | 209 | 5.51 | 3.5 | 0.63 | 0.79 |
| 50 | 147 | 105 | 191 | 4.6 | 157 | 111 | 229 | 5.91 | 3.86 | 0.63 | 0.87 |
| 63 | 168 | 117 | 220 | 5.8 | 183 | 134 | 253 | 6.5 | 4.76 | 0.75 | 0.94 |
| 75 | 233 | 167 | 266 | 6.8 | - | - | 416 | 7.28 | 5.51 | 0.75 | 1.02 |
| 90 | 254 | 180 | 264 | 8.2 | - | - | 414 | 7.87 | 5.98 | 0.75 | 1.06 |
| 110 | 301 | 215 | 301 | 10.0 | - | - | 451 | 9.02 | 7.48 | 0.75 | 1.1 |

**PVDF**

| | Metric Socket | | Metric IR/Butt | | Threaded NPT | | ANSI Flanged | | | | |
|---|---|---|---|---|---|---|---|---|---|---|---|
| d (mm) | L | z | L | e | L | z | L | D1 (inch) | D4 (inch) | D5 (inch) | R (inch) |
| 16 | 93 | 67 | - | - | 96 | 69 | - | - | - | - | - |
| 20 | 95 | 66 | 130 | 1.9 | 99 | 64 | 174 | 3.74 | 2.36 | 0.63 | 0.63 |
| 25 | 109 | 77 | 143 | 1.9 | 111 | 76 | 189 | 4.13 | 2.76 | 0.63 | 0.67 |
| 32 | 119 | 83 | 150 | 2.4 | 127 | 83 | 199 | 4.53 | 3.11 | 0.63 | 0.71 |
| 40 | 135 | 99 | 171 | 2.4 | 146 | 101 | 235 | 5.51 | 3.5 | 0.63 | 0.79 |
| 50 | 147 | 105 | 191 | 3.0 | 157 | 111 | 243 | 5.91 | 3.86 | 0.63 | 0.87 |
| 63 | 168 | 117 | 220 | 3.0 | 183 | 135 | 261 | 6.5 | 4.76 | 0.75 | 0.94 |
| 75 | 233 | 167 | 266 | 3.6 | - | - | 426 | 7.28 | 5.51 | 0.75 | 1.02 |
| 90 | 254 | 180 | 264 | 4.3 | - | - | 426 | 7.87 | 5.98 | 0.75 | 1.06 |
| 110 | 301 | 215 | 301 | 5.3 | - | - | 487 | 9.02 | 7.48 | 0.75 | 1.1 |

# Product Specification

## Type 546 True Union Ball Valve - PVC

PVC true union ball valves 3/8" through 2" shall have either solvent cement socket or threaded pipe connections. Incorporated into its design safety features is a blow-out proof stem with intended break point and the ability to hold pressure when the downstream union nut is removed. The union nut threads shall be of the buttress type to provide strong connection to the piping system. Seats shall be PTFE (Teflon®) with backing rings creating self-adjusting seals and constant operating torque. Backing rings and seals shall be EPDM or FPM*. The handle shall include in its design a key for removal of the seat carrier in addition to having sufficient elevation to permit hand clearance. Seat carrier shall have fine-pitched left-hand threads to prevent possible unscrewing when threaded end connectors are removed from pipe. Material shall meet or exceed the requirements of 12454-B according to the classifications and requirements of ASTM D-1784. End connections shall comply with ASTM 1970-01. Socket end connection dimensions shall conform to ASTM D-2467. Threaded pipe connections shall be in accordance with ASTM D-2464 which references ANSI B1.20.1 (was B2.1) for tapered pipe threads. Optional flanged version shall be in accordance with ANSI B16.5, class 150 flanges. The valve, type 546, shall carry a pressure rating of 232 psi at 68°F as supplied by George Fischer, Inc., Tustin, CA 92780.

## Type 546 True Union Ball Valve - CPVC

CPVC true union ball valves 1/2" through 2" shall have either solvent cement socket or threaded pipe connections. Incorporated into its design safety features is a blow-out proof stem with intended break point and the ability to hold pressure when the downstream union nut is removed. The union nut threads shall be of the buttress type to provide strong connection to the piping system. Seats shall be PTFE (Teflon®) with backing rings creating self-adjusting seals and constant operating torque. Backing rings and seals shall be EPDM or FPM*. The handle shall include in its design a key for removal of the seat carrier in addition to having sufficient elevation to permit hand clearance. Seat carrier shall have fine-pitched left-hand threads to prevent possible unscrewing when threaded end connectors are removed from pipe. Material shall meet or exceed the requirements of 23447-B according to the classifications and requirements of ASTM D-1784. End connections shall comply with ASTM 1970-01. Socket end connection dimensions shall conform to ASTM F439 (formerly D-2467). Threaded end connections shall conform to the dimensions as listed in ASTM F437 (formerly D-2464) which references ANSI B1.20.1 (was B2.1) for tapered pipe threads. Optional flanged version shall be in accordance with ANSI B16.5, class 150 flanges. The valve, type 546, shall carry a pressure rating of 232 psi at 68°F as supplied by George Fischer, Inc., Tustin, CA 92780.

**FPM seals are made of Viton® or equal materials.*
*Viton® is a registered trademark of DuPont Dow Elastomers.*
*Teflon® is a registered trademark of DuPont.*

# Product Specification

## Type 546 True Union Ball Valve Polypropylene

Polypropylene true union ball valves 3/8" through 2" (16 mm – 63 mm) shall have either metric fusion socket or threaded type pipe connections. Incorporated into its design safety features is a blow-out-proof stem and the ability to hold pressure when the downstream union nut is removed. The union nut threads shall be buttress-type to provide strong connections to the piping system. Seats shall be PTFE (Teflon®) with backing rings creating self-adjusting, constant operating torque sealing characteristics. Backing rings and seals shall be EPDM or FPM*. The handle shall include in its design a key for removal of the seat carrier in addition to providing sufficient height to permit hand clearance. Seat carrier shall have left-hand threads to prevent possible unscrewing when threaded end connector is installed on the pipe. Material shall meet or exceed the requirements of ASTM D 4101 as pertains to a type I homopolymer compound having a minimum tensile strength of 4350 psi/300 bar at 73°F/20°C when tested in accordance with ASTM D 638 and shall have a melt point which initiates at 316°F/158°C. The melt flow index (at 374°F/190°C/50 N) shall be 0.4 –0.8 grams per 10 minutes in accordance with ASTM D 1238. End connections shall be as outlined in ASTM D 2657 for fusion socket joining, and shall be compatible with metric pipe and fittings as manufactured by George Fischer, Inc. End connections shall comply with ASTM 1970-01. Threaded end connections shall be in accordance with ASTM D 2464 which references ANSI B 1.20 (was B 2.1) for tapered pipe threads. Optional flanged version shall be in accordance with ANSI B 16.5 class 150 flanges. The valve, Type 546, shall carry a pressure rating of 150 psi/10 bar at 68°F/20°C as supplied by George Fischer, Inc., Tustin, CA 92780.

**FPM seals are made of Viton® or equal materials. Viton® is a registered trademark of DuPont Dow Elastomers.*
*Teflon® is a registered trademark of DuPont.*

## Type 546 True Union Ball Valve PVDF

PVDF true union ball valves 3/8" through 2" (16 mm – 63 mm) shall have either metric fusion socket or threaded type pipe connections. Incorporated into its design safety features is a blow-out-proof stem and the ability to hold pressure when the downstream union nut is removed. The union nut threads shall be buttress-type to provide strong connections to the piping system. Seats shall be PTFE (Teflon®) with backing rings creating self-adjusting, constant operating torque sealing characteristics. Backing rings and seals shall be FPM*. The handle shall include in its design a key for removal of the seat carrier in addition to providing sufficient height to permit hand clearance. Seat carrier shall have left-hand threads to prevent possible unscrewing when threaded end connector is installed on the pipe. Material shall meet or exceed the requirements of ASTM D 3222 as pertains to a natural, unpigmented, virgin, noncompounded polyvinylidene fluoride compound having a minimum tensile strength of 7800 psi/538 bar at 73°F/20°C when tested in accordance with ASTM D 638 and shall have a flexural strength of 10,700 psi/738 bar at 73°F/20°C when tested according to ASTM D 790. End connections shall be as outlined in ASTM D 2657 for fusion socket joining, and shall be compatible with metric pipe and fittings as manufactured by George Fischer, Inc. End connections shall comply with ASTM 1970-01. Threaded end connections shall be in accordance with ASTM D 2464 which references ANSI B 1.20 (was B 2.1) for tapered pipe threads. Optional flanged version shall be in accordance with ANSI B 16.5 class 150 flanges. The valve, Type 546, shall carry a pressure rating of 232 psi/16 bar at 68°F/20°C as supplied by George Fischer, Inc., Tustin, CA 92780.

# Technical Data of Ball Valves

## Pressure-temperature diagram

### For PVC ball valve type 546

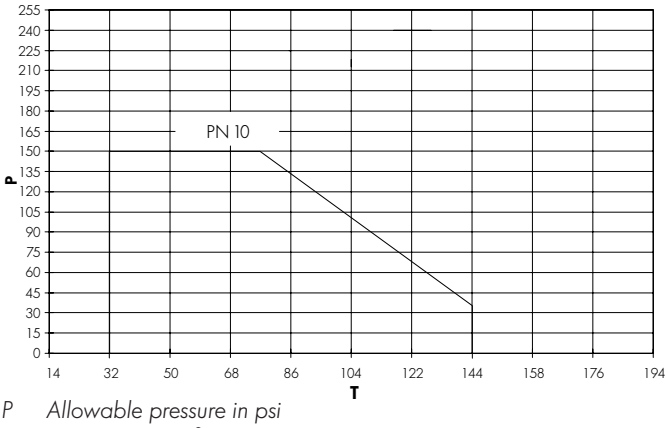


*P Allowable pressure in psi*
*T Temperature in °F*

### For CPVC ball valve type 546

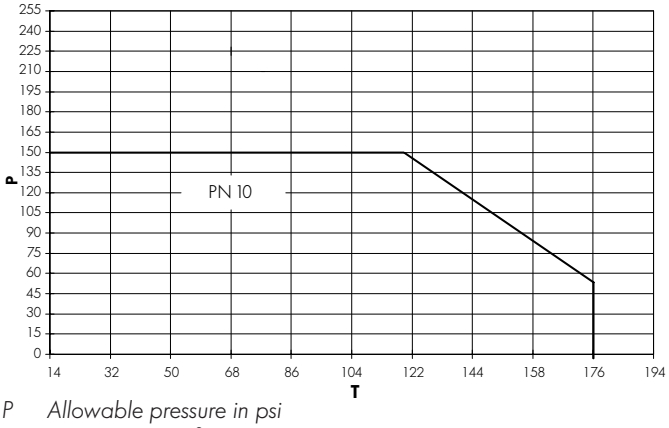


*P Allowable pressure in psi*
*T Temperature in °F*

### Pressure loss for ball valve type 546

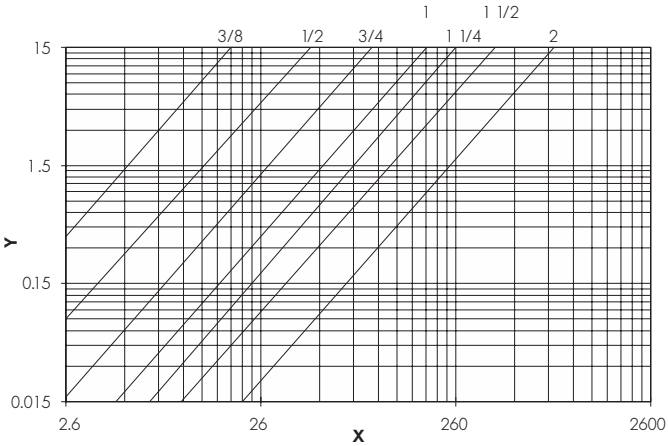


*Medium: water, 68°F*
*X Flow volume (gpm)*
*Y Pressure loss $\Delta p$ (psi)*

### Flow characteristics for ball valve type 546

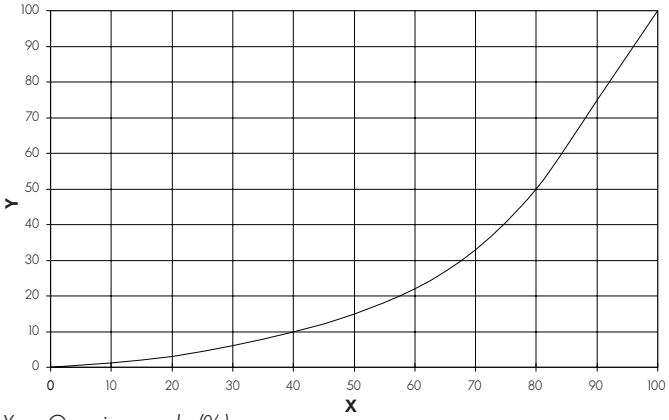


*X Opening angle (%)*
*Y $C_V$-value (%)*

### Torque for ball valve type 546 (reference values)

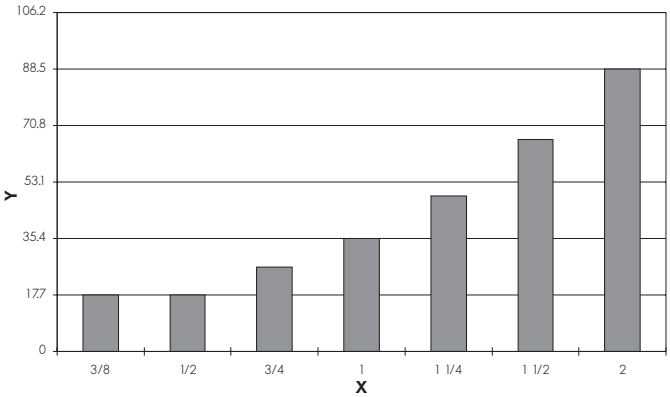


*X Nominal diameter (inch)*
*Y Torque (in-lbf)*

# Fundamentals for Ball Valves, hand operated

## Ball Valve Type 546

## Pressure-Temperature Diagram Ball Valve in PP-H (service life 25 years, medium water or similar media)

For applications with temperatures in the range of the dotted lines, please contact your George Fischer representative.

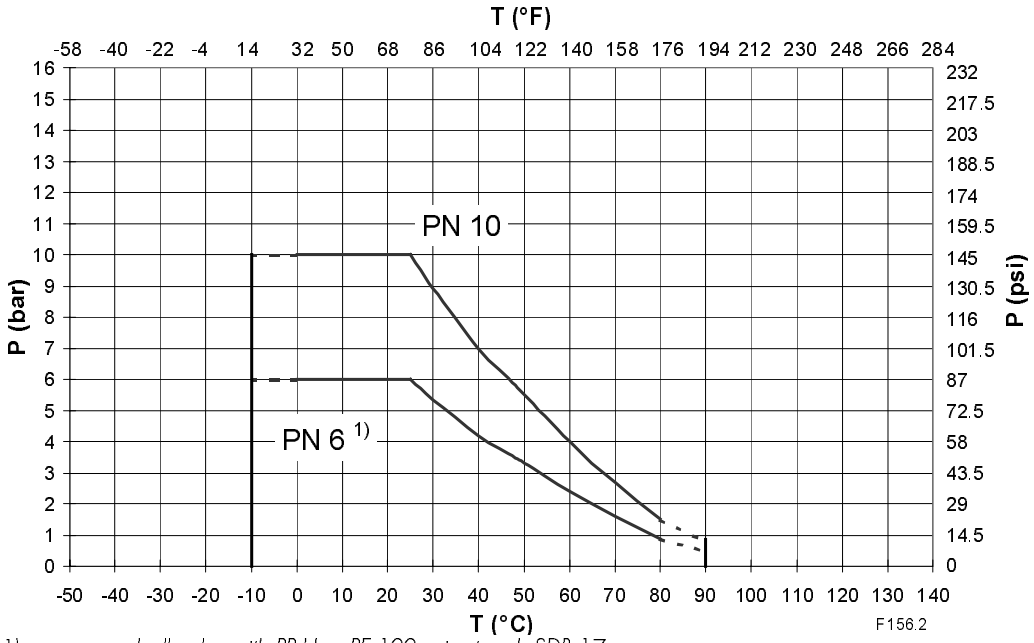


*1) e.g. ball valve with PP-H or PE 100 spigot end SDR 17*
*T Temperature in °C / °F*
*p permissible pressure in bar / psi*

# Pressure-Temperature Diagram Ball Valve Type 546 in PVDF (service life 25 years, medium water or similar media)

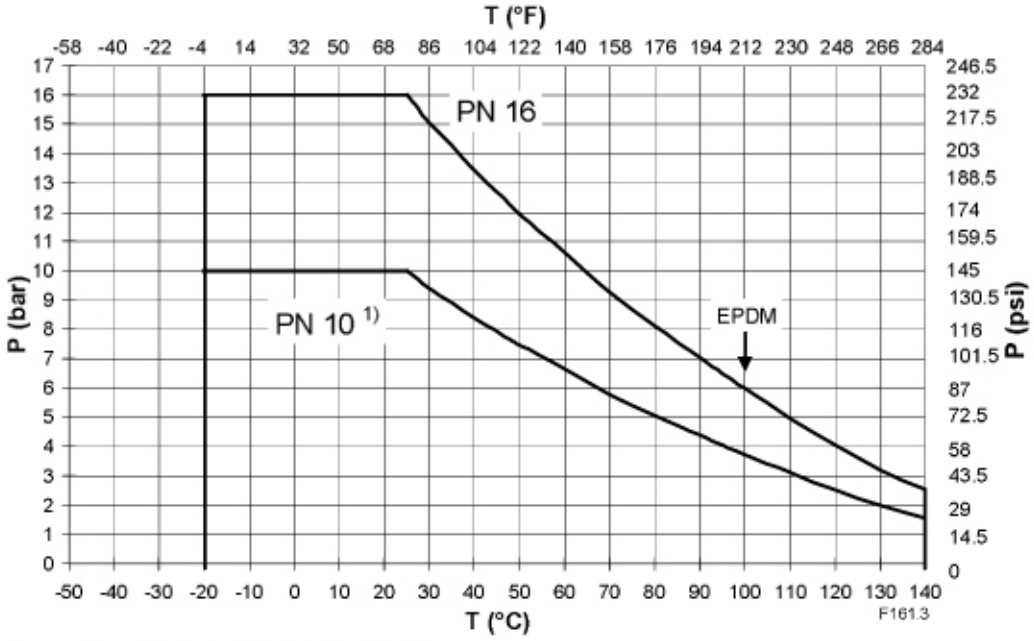


| | |
|---|---|
| *1)* | *e.g. ball valve with threaded sockets* |
| *EPDM* | *EPDM-seal max. 100°C* |
| *T* | *Temperature in °C / °F* |
| *p* | *permissible pressure in bar / psi* |

# Operating Torque for Ball Valve Type 546 (Average Values)

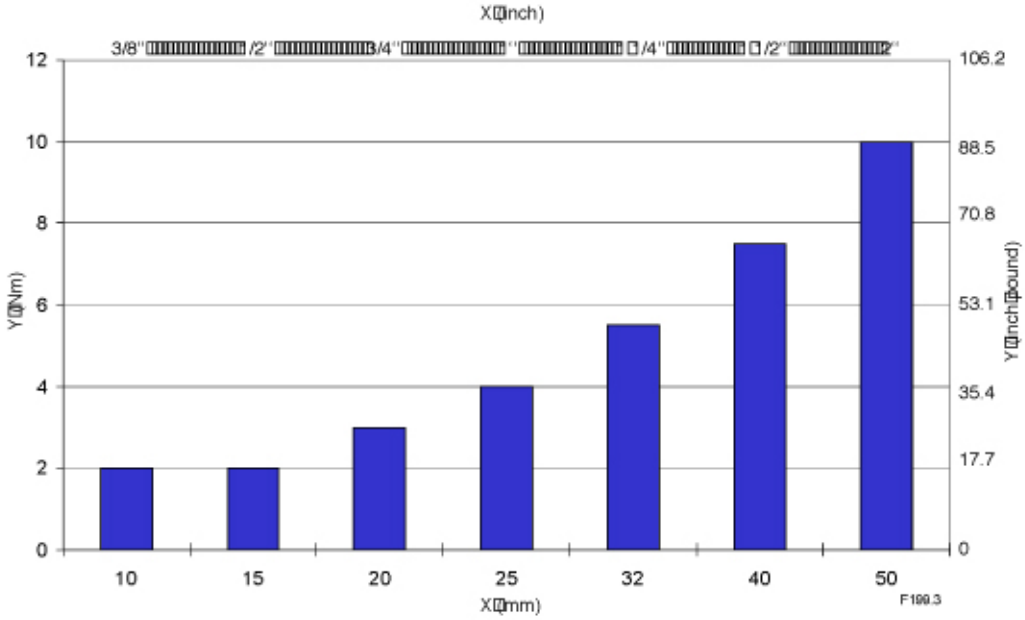


*X* *Size DN (mm / inch)*
*Y* *Torque (Nm / inch pound)*

Depending on the application (e.g. operating speed, fluid, temperature, etc.). about 2 times the operating torque should be taken for sizing actuators.

# Pressure Loss for Ball Valve Type 546

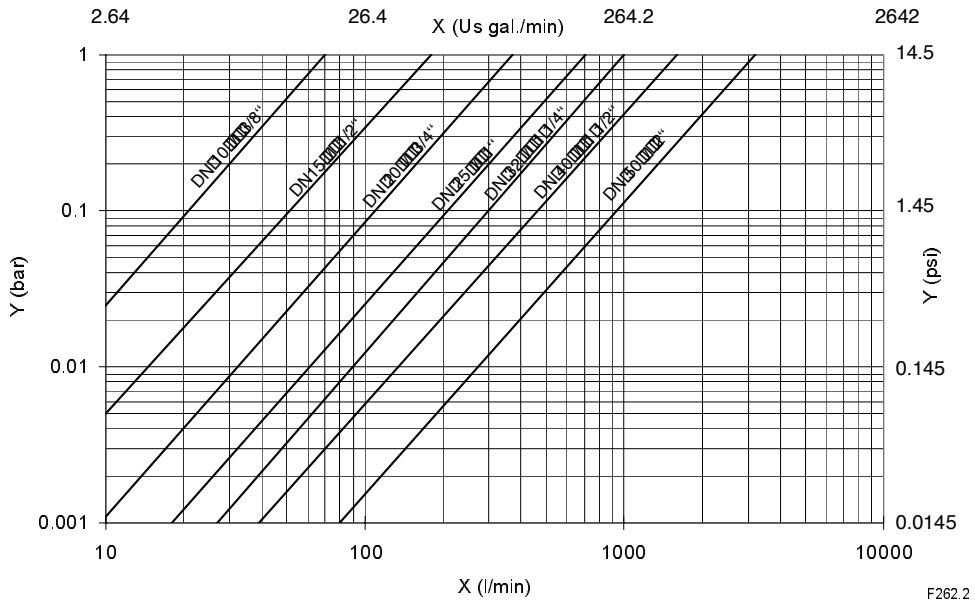


*Medium: water, 20 °C*

*X* *Flow rate (l/min), (US gal./min)*

*Y* *Pressure loss Δp (bar), (psi)*

# Flow Characteristics for Ball Valve Type 546

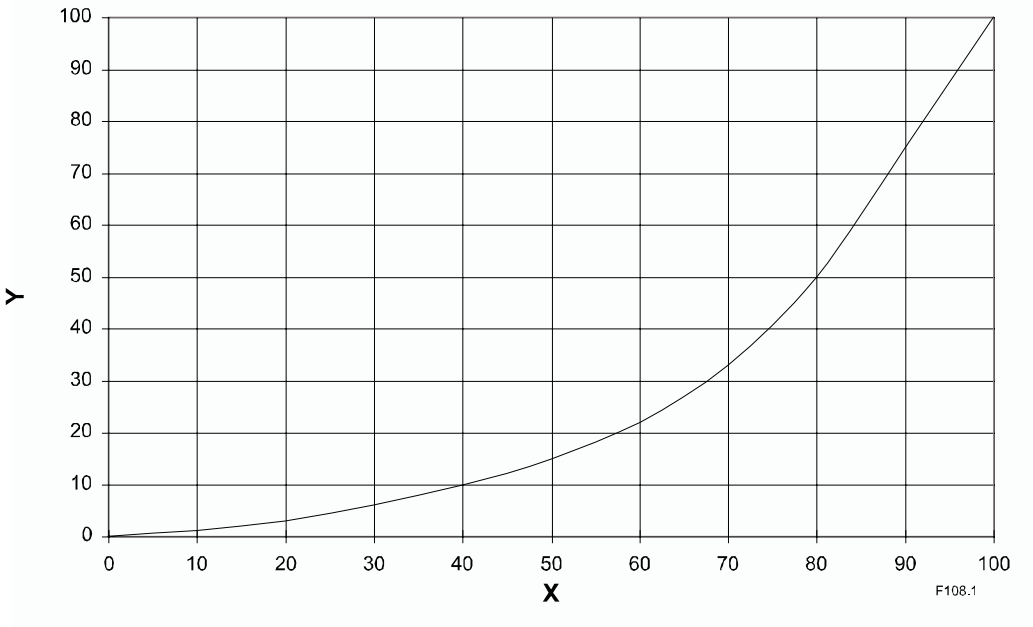


*X* *Open angle (%)*

*Y* *Flow factor kv, cv (%)*

# kv 100 Values for Ball Valve Type 546

The $k_v$ values for each intermediate valve position can be determined using the flow value characteristic and the $k_v$ 100 values.

| DN mm | DN inch | d mm | $k_v$ 100 l/min (Δp = 1 bar) | $C_v$ 100 US gal. / min (Δp = 1 psi) | $k_v$ 100 $m^3/h$ (Δp = 1 bar) |
|---|---|---|---|---|---|
| 10 | 3/8 | 16 | 70 | 4.9 | 4.2 |
| 15 | 1/2 | 20 | 185 | 12.9 | 11.1 |
| 20 | 3/4 | 25 | 350 | 24.5 | 21 |
| 25 | 1 | 32 | 700 | 49.0 | 42 |
| 32 | 1¼ | 40 | 1000 | 70.0 | 60 |
| 40 | 1½ | 50 | 1600 | 112.0 | 96 |
| 50 | 2 | 63 | 3100 | 217.1 | 186 |

# Tightening torque values for bolts type 546

Flanged joints with flange gaskets or flat gaskets

| d mm | DN mm | DN Zoll | Total number of screws (for 2 flanged joints) standard nut (height 0.8 x d) 1) | Torque (average values) Flange gasket 2) | | Torque (average values) Flat gasket | |
|---|---|---|---|---|---|---|---|
| | | | | in Nm | in In lbf | in Nm | in In lbf |
| 20 | 15 | ½ | 8 x M12 x 50 | 15 | 133 | 15 | 133 |
| 25 | 20 | ¾ | 8 x M12 x 55 | 15 | 133 | 15 | 133 |
| 32 | 25 | 1 | 8 x M12 x 60 | 15 | 133 | 15 | 133 |
| 40 | 32 | 1¼ | 8 x M16 x 70 | 15 | 133 | 20 | 177 |
| 50 | 40 | 1½ | 8 x M16 x 70 | 15 | 133 | 30 | 266 |
| 63 | 50 | 2 | 8 x M16 x 80 | 20 | 177 | 35 | 310 |

1) for valve ends Type 546 in PP-H in combination with backing flanges, use half of the standard nut height
2) preferred (plastics-oriented) gasket type

**Attention:** For more information on the use of the different gasket types, see Chapter: Jointing Technology => Separable Connections

# Technical Features of the Ball Valve Type 546

**a**) Valve ends parts for the Type 546 are available as:

- Solvent cement/fusion socket (short installation length)
- Solvent cement/fusion spigot (for standard installation length)
- Threaded socket (on request with stainless steel outer reinforcement ring)
- Butt fusion spigot
- electrofusion spigot
- Fixed flange (for standard installation length)
- Backing flange (for standard installation length)
- Solvent cement and threaded connections for other standards.

**b**) Newly designed valve nuts with buttress thread. These enable fast and safe radial mounting and dismounting of the valve during installation or maintenance work, without tools.
**Attention**: Only hand tighten valve nuts.

**c**) Union bush with fine buttress thread makes it easier to adjust the operating torque. **Attention:** Please observe the operating torque guidelines!

**d**) Ball with fully circular cross-section for optimal flow characteristics. The system with the floating ball permits a tight seal.

**e**) Two spigot seals with o-rings guarantee a long service life and high reliability.

**f**) The stem features a predetermined breaking point, which is located outside of the housing. In case of damage, the medium cannot therefore leak to the outside along the spigot.

**g**) Sturdy ball seals made of pure PTFE demonstrate high abrasion resistance, good sliding properties, chemical resistance (see the special list of "Chemical Resistance") and a long working life.

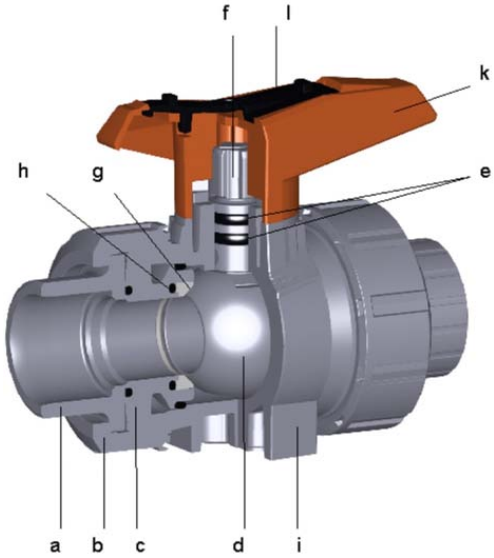


**h**) The backing seal effectuates continuous readjustment of the ball seal and this means that under normal working conditions maintenance-free operation and a constant torque can be warranted.

The special geometry of the o-ring chamber prevents the o-rings from being flushed out.

**i**) Compact housing, designed especially for plastics, with short installation length. The basic model has pick-up points for threaded inserts so that they can be attached directly on the valve. A multifunctional module with limit switches, which simultaneously serves as an interface for adding actuators, can be mounted quickly and simply on the valve body.

**k**) Ergonomic polypropylene handle with double stops and coding for clear positioning on the stem. Multifunctional handle, lockable and with grid positioning at 0° and 90°, available as an option.

**l**) Integrated handle clip of reinforced polypropylene with two cams, enabling the handle to be used as a tool for assembly and disassembly of the union bush (Attention: The union bush has left-handed thread)

# Ball Valve Type 546, PVC with solvent cement socket, Inch ASTM and threaded valve ends, NPT

**Features:**

- Union ball valve for easy installation and removal
  (z-dimension, valve end and valve nut **are not compatible** with Type 346)
- Ball seals in PTFE
- Integrated stainless steel mounting inserts

**Options:**

- Individual configuration of the valve (see price sheets)
- Multifunction module with integrated limit switches
- Pneumatic or electric actuators from **+GF+**

All data are valid for models with solvent cement sockets

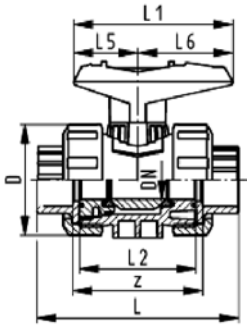


| inch | DN | psi | Cv value (Δp = 1 psi) | EPDM Seals | FPM Seals |
|---|---|---|---|---|---|
| 3/8 | 10 | 232 | 4.97 | 161 546 341 | 161 546 351 |
| 1/2 | 15 | 232 | 12.95 | 161 546 342 | 161 546 352 |
| 3/4 | 20 | 232 | 24.50 | 161 546 343 | 161 546 353 |
| 1 | 25 | 232 | 49.01 | 161 546 344 | 161 546 354 |
| 1 1/4 | 32 | 232 | 70.02 | 161 546 345 | 161 546 355 |
| 1 1/2 | 40 | 232 | 112.04 | 161 546 346 | 161 546 356 |
| 2 | 50 | 232 | 217.08 | 161 546 347 | 161 546 357 |

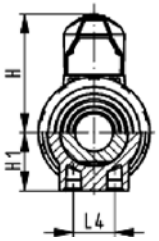


| inch | DN | D | H | H1 | L | L1 | L2 | L4 | L5 | L6 | z | lbs |
|---|---|---|---|---|---|---|---|---|---|---|---|---|
| 3/8 | 10 | 1.97 | 2.24 | 1.04 | 4.13 | 3.03 | 2.20 | 0.98 | 1.26 | 1.77 | 2.64 | 0.40 |
| 1/2 | 15 | 1.97 | 2.24 | 1.04 | 4.13 | 3.03 | 2.20 | 0.98 | 1.26 | 1.77 | 2.40 | 0.42 |
| 3/4 | 20 | 2.28 | 2.64 | 1.18 | 4.76 | 3.82 | 2.56 | 0.98 | 1.54 | 2.28 | 2.76 | 0.64 |
| 1 | 25 | 2.68 | 2.87 | 1.40 | 5.24 | 3.82 | 2.80 | 0.98 | 1.54 | 2.28 | 2.99 | 0.94 |
| 1 1/4 | 32 | 3.31 | 3.54 | 1.73 | 6.06 | 5.04 | 3.35 | 1.77 | 2.13 | 2.91 | 3.54 | 1.61 |
| 1 1/2 | 40 | 3.82 | 3.82 | 1.99 | 6.46 | 5.04 | 3.50 | 1.77 | 2.13 | 2.91 | 3.70 | 2.18 |
| 2 | 50 | 4.88 | 4.57 | 2.52 | 7.20 | 5.98 | 3.98 | 1.77 | 2.58 | 3.41 | 4.21 | 3.91 |

D

# Valves

PINACLE
STAINLESS STEEL INC.

# INDEX

## VALVES


SPECIFICATION ..... D1

***1 PC Reduced Port*** *800 WOG Ball Valve, Threaded* ..... ***D2***

***2 PC Full Port*** *1000 WOG Ball Valve, Threaded* ..... ***D4***

***2 PC Full Port*** *2000/1500 WOG Ball Valve, Threaded* ..... ***D6***

***3 PC Full Port*** *1000 WOG Ball Valve, Buttweld* ..... ***D8***

***3 PC Full Port*** *1000 WOG Ball Valve, Threaded* ..... ***D10***

***3 PC Full Port*** *1000 WOG Ball Valve, Socketweld* ..... ***D12***

***1 PC Class 150 Regular Port*** *Ball Valve, Flanged* ..... ***D14***

***2 PC Class 150 Full Port*** *Ball Valve Flanged* ..... ***D16***

***2 PC Class 300 Full Port*** *Ball Valve Flanged* ..... ***D18***

***2 PC Class 150 Full Port "FS"*** *Ball Valve, Flanged* ..... ***D20***

***Full Port*** *200 WOG Swing Check Valve, Threaded* ..... ***D22***

***800 WOG*** *Y-Check Valve ,Threaded, Socketweld* ..... ***D24***

***Full Port*** *200 WOG Globe Valve, Threaded* ..... ***D26***

***Full Port*** *200 WOG Gate Valve, Threaded* ..... ***D28***

***3 Way Reduced Port*** *1000 WOG Ball Valve, Threaded "L" Port* ..... ***D30***

***3 Way Reduced Port*** *1000 WOG Ball Valve, Threaded "T" Port* ..... ***D32***


PINACLE

# INDEX (cont'd)

***800 WOG*** *Y Strainer Valve, Threaded, Socketweld* ..... ***D34***

***6000 PSI Stainless Steel*** *Needle Valve* ..... ***D36***

***Class 150 Flange End*** *Swing Check Valve* ..... ***D38***

***Class 150 Flange End*** *Gate Valve* ..... ***D40***

***Class 150 Flange End*** *Globe Valve* ..... ***D42***

FLOW PATTERNS ..... D44

***TUBE VALVES - SEE OUR SECTION "F"***

PINACLE

# VALVES

**THREADED / SOCKETWELD / FLANGED / BUTTWELD**

- BALL / GATE / GLOBE / CHECK
- NEEDLE
- STRAINER

PINACLE

## DESIGN FEATURES

- Pressure rating: 800 PSI WOG (NON-SHOCK)
- Steam rating: 125 PSI WSP
- Investment cast body
- Bottom-loaded, Blow-out-proof stem
- Adjustable stem packing
- Stainless Steel handle with vinyl grip
- Locking device

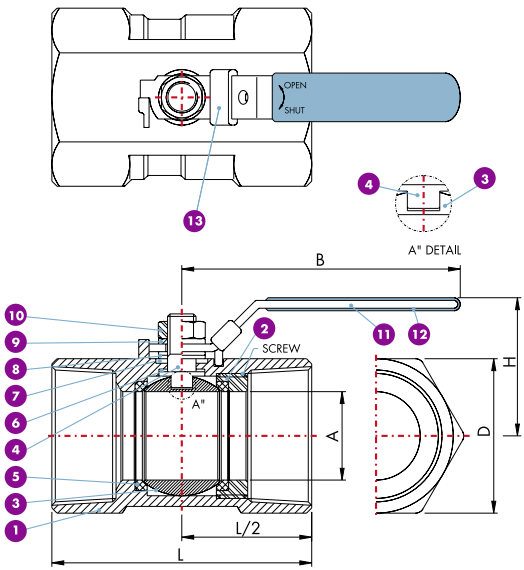

## DIMENSIONS

| CODES | SIZE | | A | | B | | D | | L | | H | | Cv Factor | Weight lb |
|---|---|---|---|---|---|---|---|---|---|---|---|---|---|---|
| | inch | mm | inch | mm | inch | mm | inch | mm | inch | mm | inch | mm | | |
| 13TBV1025 | 1/4" | 8 | 0.20 | 5.0 | 2.36 | 60 | 0.67 | 17.0 | 1.54 | 39.0 | 1.22 | 31 | 1.0 | 0.17 |
| 13TBV10375 | 3/8" | 10 | 0.28 | 7.0 | 2.76 | 70 | 0.83 | 21.0 | 1.73 | 44.0 | 1.38 | 35 | 2.5 | 0.24 |
| 13TBV105 | 1/2" | 15 | 0.36 | 9.2 | 3.39 | 86 | 0.98 | 25.0 | 2.22 | 56.0 | 1.69 | 43 | 5.5 | 0.38 |
| 13TBV1075 | 3/4" | 20 | 0.49 | 12.5 | 3.39 | 86 | 1.26 | 32.0 | 2.32 | 59.0 | 1.81 | 46 | 10.0 | 0.55 |
| 13TBV11 | 1" | 25 | 0.63 | 16.0 | 4.09 | 104 | 1.50 | 38.0 | 2.80 | 71.0 | 1.97 | 50 | 15.5 | 0.99 |
| 13TBV1125 | 11/4" | 32 | 0.79 | 20.0 | 4.09 | 104 | 1.93 | 49.0 | 3.11 | 79.0 | 2.13 | 54 | 20.0 | 1.63 |
| 13TBV115 | 11/2" | 40 | 0.96 | 24.5 | 4.96 | 126 | 2.09 | 53.0 | 3.27 | 83.0 | 2.56 | 65 | 37.0 | 1.83 |
| 13TBV12 | 2" | 50 | 1.26 | 32.0 | 4.96 | 126 | 2.56 | 65.0 | 3.94 | 100.0 | 2.83 | 72 | 60.0 | 2.76 |

## PRESSURE TEMPERATURE RATINGS (BODY)

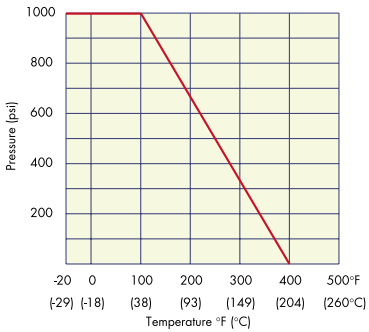


## MATERIALS LIST

| NO. | PART NAME | MATERIAL | QTY |
|---|---|---|---|
| 1 | BODY | ASTM A351 Gr. CF8M | 1 |
| 2 | CAP | ASTM A351 Gr. CF8M | 1 |
| 3 | BALL | ASTM A351 Gr. CF8M | 1 |
| 4 | STEM | ASTM A276 Gr. 316 | 1 |
| 5 | SEAT | PTFE | 2 |
| 6 | THRUST WASHER | PTFE | 1 |
| 7 | GLAND PACKING | PTFE | 1 |
| 8 | WASHER | SS304 | 2 |
| 9 | SPRING WASHER | SS304 | 1 |
| 10 | STEM NUT | SS304 | 1 |
| 11 | HANDLE | SS304 | 1 |
| 12 | HANDLE SLEEVE | VINYL GRIP | 1 |
| 13 | LOCKING PLATE | SS304 | 1 |

**** SIZES SHOWN ARE APPROXIMATE AND MAY VARY***

PINACLE

## DESIGN FEATURES

- Blow-out-proof stem design
- Steam Rating: 125 PSI WSP
- Temperature range: -50°F to 450°F
- Locking device
- Threaded type:
  ANSI B1.20.1 (NPT)

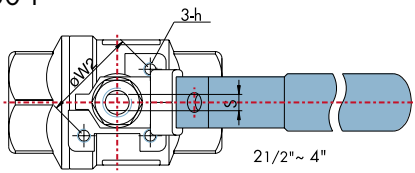


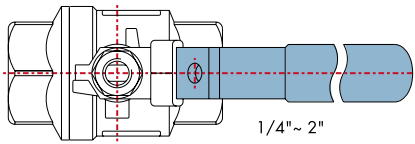


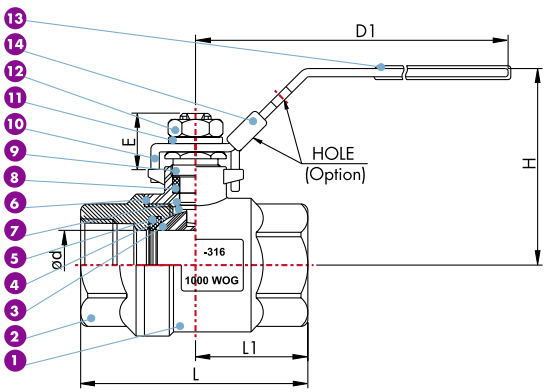

## DIMENSIONS

| CODES | SIZE | | d | | E | | L | | L1 | | H | | S | | D1 | | h | Cv Factor | Weight Lb |
|---|---|---|---|---|---|---|---|---|---|---|---|---|---|---|---|---|---|---|---|
| | inch | mm | inch | mm | inch | mm | inch | mm | inch | mm | inch | mm | inch | mm | inch | mm | (Option) | | |
| 13TBV2025 | 1/4" | 8 | 0.43 | 11.0 | 0.61 | 15.5 | 2.28 | 57.8 | 1.13 | 28.8 | 2.25 | 57.2 | 0.21 | 5.45 | 4.06 | 103 | | 16 | 0.57 |
| 13TBV20375 | 3/8" | 10 | 0.49 | 12.5 | 0.61 | 15.5 | 2.28 | 57.8 | 1.13 | 28.8 | 2.25 | 57.2 | 0.21 | 5.45 | 4.06 | 103 | | 16 | 0.53 |
| 13TBV205 | 1/2" | 15 | 0.59 | 15.0 | 0.57 | 14.5 | 2.43 | 61.7 | 1.21 | 30.7 | 2.33 | 59.1 | 0.21 | 5.45 | 4.06 | 103 | | 26 | 0.66 |
| 13TBV2075 | 3/4" | 20 | 0.79 | 20.0 | 0.83 | 21.0 | 2.76 | 70.1 | 1.38 | 35.0 | 2.46 | 62.6 | 0.21 | 5.45 | 4.06 | 103 | | 55 | 0.93 |
| 13TBV21 | 1" | 25 | 0.98 | 25.0 | 0.77 | 19.5 | 3.20 | 81.3 | 1.58 | 40.2 | 2.78 | 70.7 | 0.24 | 6.20 | 5.00 | 127 | | 110 | 1.53 |
| 13TBV2125 | 11/4" | 32 | 1.26 | 32.0 | 1.09 | 27.9 | 3.78 | 96.0 | 1.86 | 47.2 | 3.00 | 76.2 | 0.24 | 6.20 | 5.00 | 127 | | 180 | 2.23 |
| 13TBV215 | 11/2" | 40 | 1.50 | 38.0 | 1.50 | 27.5 | 4.43 | 112.5 | 2.19 | 55.6 | 3.51 | 89.1 | 0.37 | 9.40 | 6.02 | 153 | | 270 | 4.10 |
| 13TBV22 | 2" | 50 | 2.00 | 50.8 | 1.08 | 26.7 | 4.96 | 126.0 | 2.46 | 62.4 | 3.87 | 98.2 | 0.37 | 9.40 | 7.60 | 193 | | 500 | 6.27 |
| 13TBV225 | 21/2" | 65 | 2.56 | 65.0 | 1.02 | 26.0 | 6.63 | 168.5 | 3.35 | 85.0 | 4.35 | 110.6 | 0.37 | 9.40 | 7.60 | 193 | M8xP1.25 | 800 | 13.77 |
| 13TBV23 | 3" | 80 | 3.15 | 80.0 | 1.50 | 38.0 | 7.54 | 191.4 | 3.78 | 95.9 | 4.88 | 124.0 | 0.47 | 12.00 | 10.98 | 279 | M10xP1.5 | 1150 | 22.03 |
| 13TBV24 | 4" | 100 | 3.94 | 100.0 | 1.89 | 48.0 | 8.52 | 216.5 | 4.26 | 108.3 | 6.63 | 168.5 | 0.47 | 16.00 | 13.19 | 335 | M10xP1.5 | 2120 | 37.89 |

## PRESSURE TEMPERATURE RATINGS
(PTFE SEATS)

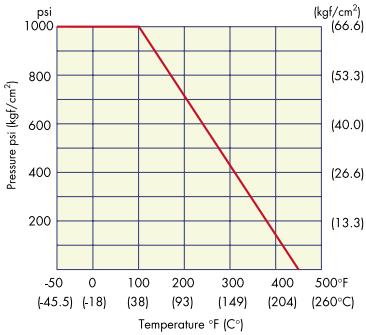


## MATERIALS LIST

| NO. | PART NAME | MATERIAL | QTY |
|---|---|---|---|
| 1 | BODY | ASTM A351 Gr. CF8M | 1 |
| 2 | CAP | ASTM A351 Gr. CF8M | 1 |
| 3 | BALL | ASTM A351 Gr. CF8M | 1 |
| 4 | STEM | ASTM A276 Gr. 316 | 1 |
| 5 | SEAT | PTFE+15% G/F | 2 |
| 6 | GASKET | PTFE | 1 |
| 7 | THRUST WASHER | PTFE | 1 |
| 8 | PACKING | PTFE | 1 |
| 9 | GLAND | SS304 | 1 |
| 10 | HANDLE | SS304 | 1 |
| 11 | SPRING WASHER | SS304 | 1 |
| 12 | HANDLE NUT | SS304 | 1 |
| 13 | HANDLE SLEEVE | VINYL GRIP | 1 |
| 14 | LOCKING PLATE* | SS304 | 1 |

* OPTION

**** SIZES SHOWN ARE APPROXIMATE AND MAY VARY***

PINACLE

## DESIGN FEATURES

- Working pressure: 1/4"~1" 2000 PSI
  11/4"~2" 1500 PSI
- Steam Rating: 150 PSI WSP
- Investment casting body & cap
- ME-PTFE Seal Kits: Replaces PTFE, RPTFE and FPA
  Low deformation under load
  Low permeation
- Temperature rating:
  -45.5°C (-50°F) to
  246°C (475°F)
- Long cycle life
- Adjustable stem packing
- Blow-out proof stem
- Locking device
- Design specification:
  ANSI B16.34
  CLASS 900
- Test standard: API 598
- Option:
  Seal weld cap to body

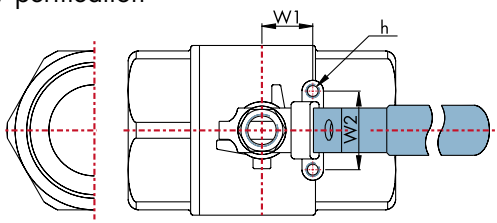


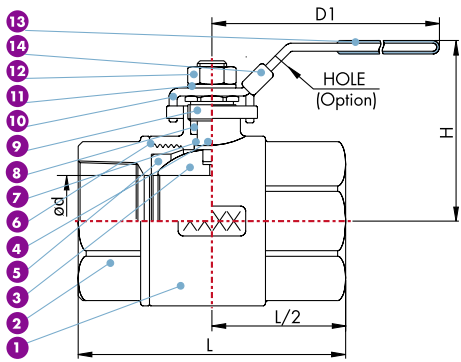

## DIMENSIONS

| CODES | SIZE | | d | | L | | H | D1 | | W1 | | W2 | | h | Cv Factor | Weight Lb |
|---|---|---|---|---|---|---|---|---|---|---|---|---|---|---|---|---|
| | inch | mm | inch | mm | inch | mm | inch | inch | mm | inch | mm | inch | mm | (Option) | | |
| 13TBVMM025 | 1/4" | 8 | 0.43 | 11.0 | 2.34 | 59.5 | 2.24 | 4.06 | 103 | 0.50 | 12.7 | 1.12 | 28.5 | M5 x P0.8 | 16 | 0.81 |
| 13TBVMM0375 | 3/8" | 10 | 0.49 | 12.5 | 2.34 | 59.5 | 2.24 | 4.06 | 103 | 0.50 | 12.7 | 1.12 | 28.5 | M5 x P0.8 | 16 | 0.79 |
| 13TBVMM05 | 1/2" | 15 | 0.59 | 15.0 | 2.52 | 64.5 | 2.27 | 4.06 | 103 | 0.50 | 12.7 | 1.12 | 28.5 | M5 x P0.8 | 26 | 0.93 |
| 13TBVMM075 | 3/4" | 20 | 0.79 | 20.0 | 3.03 | 77.0 | 2.70 | 5.00 | 127 | 0.88 | 22.4 | 1.38 | 35.0 | M6 x P1.0 | 55 | 1.76 |
| 13TBVMM1 | 1" | 25 | 0.98 | 25.0 | 3.56 | 90.5 | 2.86 | 5.00 | 127 | 0.88 | 22.4 | 1.38 | 35.0 | M6 x P1.0 | 110 | 2.73 |
| 13TBVMM125 | 11/4" | 32 | 1.26 | 32.0 | 3.92 | 99.5 | 3.45 | 6.14 | 156 | 1.00 | 25.4 | 1.50 | 38.1 | M6 x P1.0 | 180 | 4.52 |
| 13TBVMM15 | 11/2" | 40 | 1.50 | 38.0 | 4.65 | 118.0 | 3.66 | 7.60 | 193 | 1.00 | 25.4 | 1.50 | 38.1 | M6 x P1.0 | 270 | 5.68 |
| 13TBVMM2 | 2" | 50 | 2.00 | 50.8 | 5.37 | 136.5 | 4.11 | 7.60 | 193 | 1.00 | 25.4 | 1.50 | 38.1 | M6 x P1.0 | 500 | 9.76 |

## PRESSURE TEMPERATURE RATINGS
(ME-PTFE SEATS)

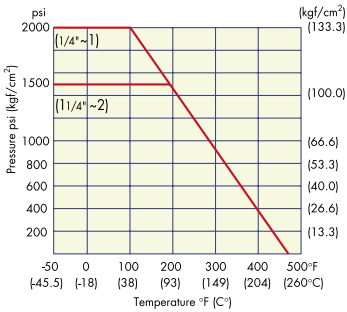


## MATERIALS LIST

| NO. | PART NAME | MATERIAL | QTY |
|---|---|---|---|
| 1 | BODY | ASTM A351 Gr. CF8M | 1 |
| 2 | CAP | ASTM A351 Gr. CF8M | 1 |
| 3 | BALL | ASTM A351 Gr. CF8M | 1 |
| 4 | STEM | ASTM A276 Gr. 316 | 1 |
| 5 | SEAT | ME-PTFE* | 2 |
| 6 | GASKET | ME-PTFE* | 1 |
| 7 | THRUST WASHER | ME-PTFE* | 1 |
| 8 | PACKING | ME-PTFE* | 1 |
| 9 | GLAND | SS304 | 1 |
| 10 | HANDLE | SS304 | 1 |
| 11 | SPRING WASHER | SS304 | 1 |
| 12 | HANDLE NUT | SS304 | 1 |
| 13 | HANDLE SLEEVE | VINYL GRIP | 1 |
| 14 | LOCKING PLATE | SS304 | 1 |

*ME-PTFE IS MOLECULARLY ENHANCED PTFE

**** SIZES SHOWN ARE APPROXIMATE AND MAY VARY***

PINACLE

## DESIGN FEATURES

- Pressure rating: 1000 PSI WOG (NON-SHOCK)
- Steam Rating: 150 PSI WSP
- Investment cast body & cap
- Anti-static blow-out-proof stem
- Adjustable stem packing
- Stainless Steel handle with vinyl grip

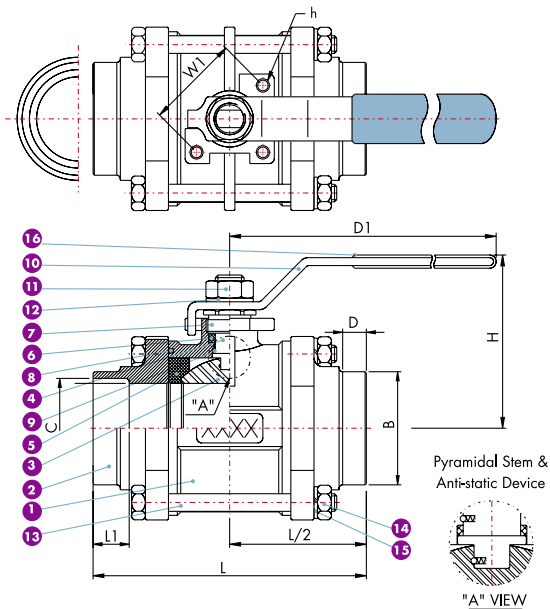

## DIMENSIONS

| SIZE | | B | | C | | D | | L | | L1 | | H | D1 | | W1 | | h | Cv Factor | Weight Lb |
|---|---|---|---|---|---|---|---|---|---|---|---|---|---|---|---|---|---|---|---|
| inch | mm | inch | mm | inch | mm | inch | mm | inch | mm | inch | mm | inch | inch | mm | inch | mm | | | |
| 1/4" | 8 | | | | | | | 2.56 | 65 | | | 4.02 | 4.02 | 102 | 1.42 | 36 | M5 x P0.8 | 6 | 1.06 |
| 3/8" | 10 | | | | | | | 2.56 | 65 | | | 4.02 | 4.02 | 102 | 1.42 | 36 | M5 x P0.8 | 12 | 1.01 |
| 1/2" | 15 | 0.67 | 17.0 | 0.55 | 14.0 | 0.24 | 6.0 | 2.80 | 71 | 0.35 | 9.0 | 4.02 | 4.02 | 102 | 1.42 | 36 | M5 x P0.8 | 19 | 1.28 |
| 3/4" | 20 | 0.94 | 24.0 | 0.83 | 21.0 | 0.24 | 6.0 | 3.35 | 85 | 0.35 | 9.0 | 4.96 | 4.96 | 126 | 1.42 | 36 | M5 x P0.8 | 37 | 2.02 |
| 1" | 25 | 1.18 | 30.0 | 1.06 | 27.0 | 0.28 | 7.0 | 3.74 | 95 | 0.41 | 10.5 | 4.96 | 4.96 | 126 | 1.42 | 36 | M5 x P0.8 | 64 | 2.62 |
| 11/4" | 32 | 1.46 | 37.0 | 1.34 | 34.0 | 0.28 | 7.0 | 4.41 | 112 | 0.41 | 10.5 | 5.91 | 5.91 | 150 | 1.97 | 50 | M6 x P1.0 | 103 | 4.57 |
| 11/2" | 40 | 1.73 | 44.0 | 1.61 | 41.0 | 0.31 | 8.0 | 4.84 | 123 | 0.47 | 12.0 | 5.91 | 5.91 | 150 | 1.97 | 50 | M6 x P1.0 | 143 | 6.06 |
| 2" | 50 | 2.20 | 56.0 | 2.09 | 53.0 | 0.31 | 8.0 | 5.55 | 141 | 0.47 | 12.0 | 7.32 | 7.32 | 186 | 1.97 | 50 | M6 x P1.0 | 360 | 8.98 |
| 21/2" | 65 | 3.00 | 76.1 | 2.84 | 72.1 | 0.31 | 8.0 | 6.81 | 173 | 0.47 | 12.0 | 10.71 | 10.71 | 272 | 2.76 | 70 | M8 x P1.25 | 440 | 17.9 |
| 3" | 80 | 3.50 | 89.0 | 3.35 | 85.0 | 0.31 | 8.0 | 7.56 | 192 | 0.47 | 12.0 | 10.71 | 10.71 | 272 | 4.02 | 102 | M10 x P1.5 | 520 | 28.03 |
| 4" | 100 | 4.25 | 108.0 | 4.09 | 104.0 | 0.31 | 8.0 | 8.86 | 225 | 0.47 | 12.0 | 13.19 | 13.19 | 335 | 4.02 | 102 | M10 x P1.5 | 820 | 46.57 |

## PRESSURE TEMPERATURE RATINGS (BODY)

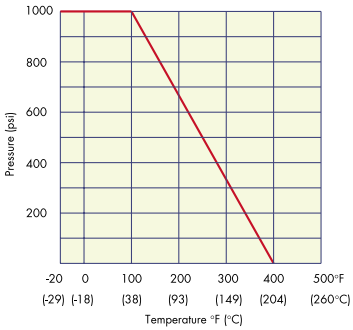


## MATERIALS LIST

| NO. | PART NAME | MATERIAL | QTY |
|---|---|---|---|
| 1 | BODY | ASTM A351 Gr. CF8M | 1 |
| 2 | CAP | ASTM A351 Gr. CF8M | 2 |
| 3 | BALL | ASTM A351 Gr. CF8M | 1 |
| 4 | STEM | ASTM A276 Gr. 316 | 1 |
| 5 | SEAT | PTFE | 2 |
| 6 | PACKING | GRAFOIL | 1 |
| 7 | GLAND | SS304 | 1 |
| 8 | GASKET | GRAFOIL | 2 |
| 9 | THRUST WASHER | PTFE | 1 |
| 10 | HANDLE | SS304 | 1 |
| 11 | HANDLE NUT | SS304 | 1 |
| 12 | SPRING WASHER | SS304 | 1 |
| 13 | BOLTS | ASTM A193 Gr. B8 | 4-6 |
| 14 | BOLT NUTS | ASTM A194 Gr. 8 | 4-6 |
| 15 | BOLT WASHERS | SS304 | 4-6 |
| 16 | HANDLE SLEEVE | VINYL GRIP | 1 |

**** SIZES SHOWN ARE APPROXIMATE AND MAY VARY***

PINACLE

## DESIGN FEATURES

- Pressure rating: 1000 PSI WOG (NON-SHOCK)
- Steam Rating: 150 PSI WSP
- Investment cast body & cap
- Blow-out-proof stem
- Adjustable stem packing
- Stainless Steel handle with vinyl grip
- Locking device

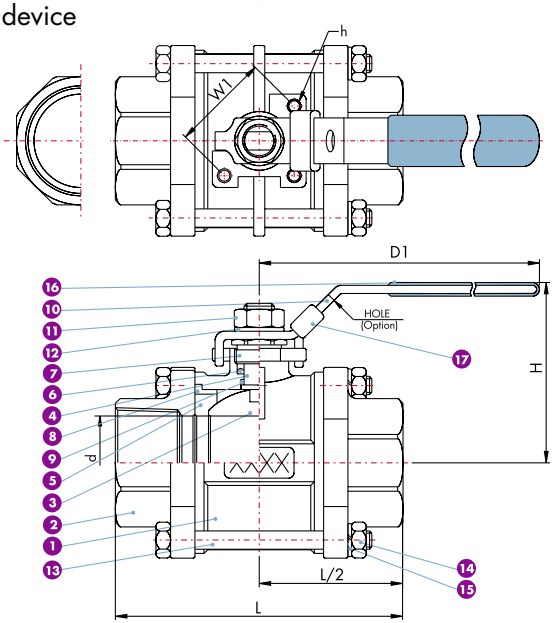

## DIMENSIONS

| CODES | SIZE | | d | | L | | D1 | | H | | W1 | | h | Cv Factor | Weight Lb |
|---|---|---|---|---|---|---|---|---|---|---|---|---|---|---|---|
| | inch | mm | inch | mm | inch | mm | inch | mm | inch | mm | inch | mm | | | |
| 13TBV3025 | 1/4" | 8 | 0.43 | 11.0 | 2.56 | 65 | 4.02 | 102 | 4.02 | 54 | 1.42 | 36 | M5 x P0.8 | 6 | 1.06 |
| 13TBV30375 | 3/8" | 10 | 0.49 | 12.5 | 2.56 | 65 | 4.02 | 102 | 4.02 | 54 | 1.42 | 36 | M5 x P0.8 | 12 | 1.01 |
| 13TBV305 | 1/2" | 15 | 0.59 | 15.0 | 2.80 | 71 | 4.02 | 102 | 4.02 | 55 | 1.42 | 36 | M5 x P0.8 | 19 | 1.28 |
| 13TBV3075 | 3/4" | 20 | 0.79 | 20.0 | 3.35 | 85 | 4.96 | 126 | 4.96 | 65 | 1.42 | 36 | M5 x P0.8 | 37 | 2.02 |
| 13TBV31 | 1" | 25 | 1.00 | 25.4 | 3.74 | 95 | 4.96 | 126 | 4.96 | 71 | 1.42 | 36 | M5 x P0.8 | 64 | 2.62 |
| 13TBV3125 | 11/4" | 32 | 1.26 | 32.0 | 4.37 | 111 | 5.91 | 150 | 5.91 | 89 | 1.97 | 50 | M6 x P1.0 | 103 | 4.57 |
| 13TBV315 | 11/2" | 40 | 1.57 | 40.0 | 4.76 | 121 | 5.91 | 150 | 5.91 | 94 | 1.97 | 50 | M6 x P1.0 | 143 | 6.06 |
| 13TBV32 | 2" | 50 | 2.00 | 50.8 | 5.51 | 140 | 7.32 | 186 | 7.32 | 100 | 1.97 | 50 | M6 x P1.0 | 360 | 8.98 |
| 13TBV325 | 21/2" | 65 | 2.56 | 65.0 | 6.81 | 173 | 10.71 | 272 | 10.71 | 121 | 2.76 | 70 | M8 x P1.25 | 440 | 17.9 |
| 13TBV33 | 3" | 80 | 3.15 | 80.0 | 7.56 | 192 | 10.71 | 272 | 10.71 | 134 | 4.02 | 102 | M10 x P1.5 | 520 | 28.03 |
| 13TBV34 | 4" | 100 | 3.94 | 100.0 | 8.86 | 225 | 13.19 | 335 | 13.19 | 172 | 4.02 | 102 | M10 x P1.5 | 820 | 46.57 |

## PRESSURE TEMPERATURE RATINGS (BODY)

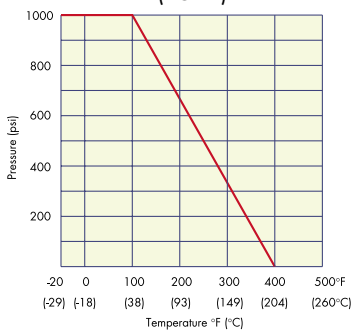


## MATERIALS LIST

| NO. | PART NAME | MATERIAL | QTY |
|---|---|---|---|
| 1 | BODY | ASTM A351 Gr. CF8M | 1 |
| 2 | CAP | ASTM A351 Gr. CF8M | 2 |
| 3 | BALL | ASTM A351 Gr. CF8M | 1 |
| 4 | STEM | ASTM A276 Gr. 316 | 1 |
| 5 | SEAT | PTFE+15% G/F | 2 |
| 6 | PACKING | PTFE | 1 |
| 7 | GLAND | SS304 | 1 |
| 8 | END SEALS | PTFE | 2 |
| 9 | THRUST WASHER | PTFE | 1 |
| 10 | HANDLE | SS304 | 1 |
| 11 | HANDLE NUT | SS304 | 1 |
| 12 | SPRING WASHER | SS304 | 1 |
| 13 | BOLTS | ASTM A193 Gr. B8 | 4-6 |
| 14 | BOLT NUTS | ASTM A194 Gr. 8 | 4-6 |
| 15 | BOLT WASHERS | SS304 | 4-6 |
| 16 | HANDLE SLEEVE | VINYL GRIP | 1 |
| 17 | LOCKING PLATE* | SS304 | 1 |

*OPTION

**** SIZES SHOWN ARE APPROXIMATE AND MAY VARY***

PINACLE

## DESIGN FEATURES

- Pressure rating: 1000 PSI WOG (NON-SHOCK)
- Steam Rating: 150 PSI WSP
- Investment cast body & cap
- Blow-out-proof stem
- Adjustable stem packing
- Stainless Steel handle with vinyl grip
- Locking device

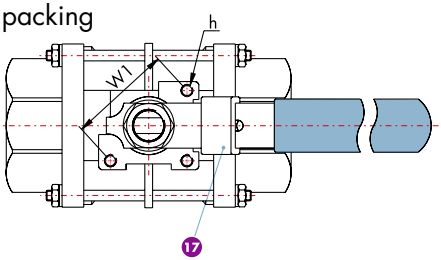


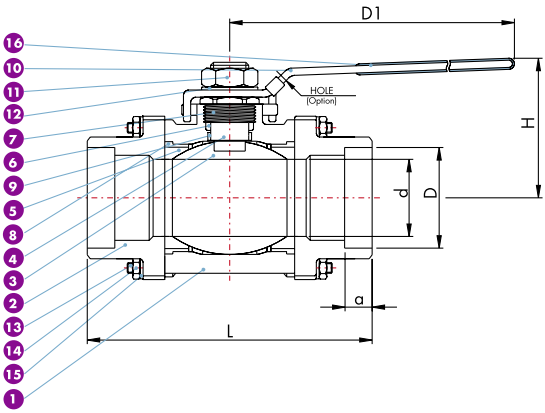

# 1000 WOG BALL VALVE, SOCKETWELD

## DIMENSIONS

| CODES | SIZE | | a | | d | | D | | D1 | H | L | | W1 | h | Cv Factor | Weight Lb |
|---|---|---|---|---|---|---|---|---|---|---|---|---|---|---|---|---|
| | inch | mm | inch | mm | inch | mm | inch | mm | inch | inch | inch | mm | inch | | | |
| 13WBV3025 | 1/4" | 8 | 0.39 | 10 | 0.43 | 11.0 | 0.56 | 14.1 | 4.02 | 2.13 | 2.56 | 65 | 1.42 | M5 x P0.8 | 6 | 1.06 |
| 13WBV30375 | 3/8" | 10 | 0.39 | 10 | 0.49 | 12.5 | 0.69 | 17.5 | 4.02 | 2.13 | 2.56 | 65 | 1.42 | M5 x P0.8 | 12 | 1.01 |
| 13WBV305 | 1/2" | 15 | 0.39 | 10 | 0.59 | 15.0 | 0.85 | 21.7 | 4.02 | 2.24 | 2.80 | 71 | 1.42 | M5 x P0.8 | 19 | 1.28 |
| 13WBV3075 | 3/4" | 20 | 0.51 | 13 | 0.79 | 20.0 | 1.07 | 27.1 | 4.96 | 2.64 | 3.35 | 85 | 1.42 | M5 x P0.8 | 37 | 2.02 |
| 13WBV31 | 1" | 25 | 0.51 | 13 | 1.00 | 25.4 | 1.33 | 33.8 | 5.00 | 2.76 | 3.74 | 95 | 1.42 | M5 x P0.8 | 64 | 2.62 |
| 13WBV3125 | 11/4" | 32 | 0.51 | 13 | 1.26 | 32.0 | 1.67 | 42.5 | 6.14 | 3.59 | 4.41 | 111 | 1.97 | M6 x P1.0 | 103 | 4.57 |
| 13WBV315 | 11/2" | 40 | 0.51 | 13 | 1.57 | 40.0 | 1.91 | 48.6 | 6.14 | 3.74 | 4.84 | 121 | 1.97 | M6 x P1.0 | 143 | 6.06 |
| 13WBV32 | 2" | 50 | 0.63 | 16 | 2.00 | 50.8 | 2.41 | 61.1 | 7.52 | 4.02 | 5.55 | 141 | 1.97 | M6 x P1.0 | 360 | 8.98 |
| 13WBV325 | 21/2" | 65 | 0.63 | 16 | 2.56 | 65.0 | 2.91 | 73.8 | 10.71 | 4.76 | 6.81 | 173 | 2.76 | M8 x P1.25 | 440 | 17.9 |
| 13WBV33 | 3" | 80 | 0.63 | 16 | 3.15 | 80.0 | 3.54 | 89.8 | 10.98 | 5.08 | 7.56 | 192 | 4.02 | M10 x P1.5 | 520 | 28.03 |
| 13WBV34 | 4" | 100 | 0.75 | 19 | 3.94 | 100.0 | 4.55 | 115.5 | 13.19 | 6.84 | 8.86 | 225 | 4.02 | M10 x P1.5 | 820 | 46.57 |

## PRESSURE TEMPERATURE RATINGS (BODY)

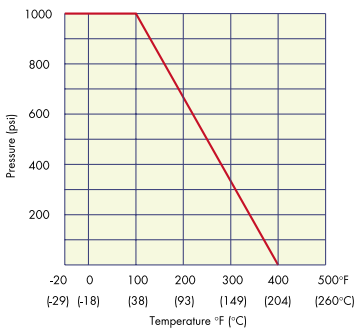


## MATERIALS LIST

| NO. | PART NAME | MATERIAL | QTY |
|---|---|---|---|
| 1 | BODY | ASTM A351 Gr. CF8M | 1 |
| 2 | CAP | ASTM A351 Gr. CF8M | 2 |
| 3 | BALL | ASTM A351 Gr. CF8M | 1 |
| 4 | STEM | ASTM A276 Gr. 316 | 1 |
| 5 | SEAT | PTFE+15% G/F | 2 |
| 6 | PACKING | PTFE | 1 |
| 7 | GLAND | SS304 | 1 |
| 8 | END SEALS | PTFE | 2 |
| 9 | THRUST WASHER | PTFE | 1 |
| 10 | HANDLE | SS304 | 1 |
| 11 | HANDLE NUT | SS304 | 1 |
| 12 | SPRING WASHER | SS304 | 1 |
| 13 | BOLTS | ASTM A193 Gr. B8 | 4-6 |
| 14 | BOLT NUTS | ASTM A194 Gr. 8 | 4-6 |
| 15 | BOLT WASHER | SS304 | 4-6 |
| 16 | HANDLE SLEEVE | VINYL GRIP | 1 |
| 17 | LOCKING PLATE | SS304 | 1 |

*OPTION

**** SIZES SHOWN ARE APPROXIMATE AND MAY VARY***

## DESIGN FEATURES

- 1 PC 150# Regular Port
- ISO 5211 actuator mounting pad
- Blow-out-proof stem design
- Anti-static device
- Adjustable stem packing
- Locking device
- Body: ASTM A351 Gr.CF8M for TC-6000
- ME-PTFE Seal Kits: Replaces PTFE, RPTFE and FPA
  Low deformation under load
  Low permeation
- Temperature rating: -45.5°C (-50°F) to 246°C (475°F)
- Long cycle life
- ANSI B16.5, B16.10 and B16.34 full compliance
- Test standard: API 598

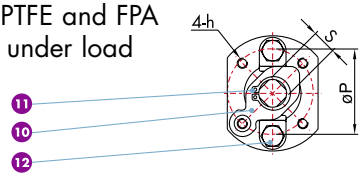


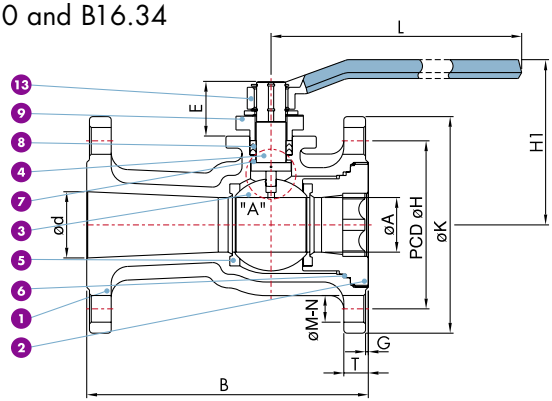


Pyramidal Stem & Anti-static Device

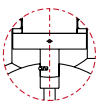

"A" VIEW

## DIMENSIONS

| CODES | SIZE | | A | B | E | d | | G | H | K | T | M | N | P | S | L | H1 | h | Cv Factor | Weight Lb |
|---|---|---|---|---|---|---|---|---|---|---|---|---|---|---|---|---|---|---|---|---|
| | inch | mm | inch | inch | inch | inch | mm | inch | inch | inch | inch | inch | | inch | inch | inch | inch | | | |
| 13FVAI1 | 1" | 25 | 0.79 | 5.0 | 0.98 | 0.98 | 25 | 0.06 | 3.12 | 4.25 | 0.44 | 0.62 | 4 | 1.65 | 0.43 | 5.18 | 2.95 | M5xP0.8 | 52 | 5.07 |
| 13FVAI1.5 | 11/2" | 40 | 1.26 | 6.5 | 1.24 | 1.57 | 40 | 0.06 | 3.88 | 5.00 | 0.56 | 0.62 | 4 | 1.97 | 0.55 | 6.42 | 3.81 | M6xP1.0 | 120 | 9.92 |
| 13FVAI2 | 2" | 50 | 1.50 | 7.0 | 1.65 | 1.97 | 50 | 0.06 | 4.75 | 6.00 | 0.62 | 0.75 | 4 | 2.76 | 0.67 | 9.13 | 4.96 | M8xP1.25 | 170 | 15.66 |
| 13FVAI2.5 | 21/2" | 65 | 1.97 | 7.5 | 1.65 | 2.64 | 67 | 0.06 | 5.50 | 7.00 | 0.69 | 0.75 | 4 | 2.76 | 0.67 | 9.13 | 5.32 | M8xP1.25 | 255 | 24.00 |
| 13FVAI3 | 3" | 80 | 2.56 | 8.0 | 2.20 | 3.15 | 80 | 0.06 | 6.00 | 7.50 | 0.75 | 0.75 | 4 | 4.02 | 0.87 | 12.87 | 5.98 | M10xP1.5 | 430 | 31.31 |
| 13FVAI4 | 4" | 100 | 3.15 | 9.0 | 2.20 | 3.94 | 100 | 0.06 | 7.50 | 9.00 | 0.94 | 0.75 | 8 | 4.02 | 0.87 | 12.87 | 6.30 | M10xP1.5 | 565 | 52.00 |
| 13FVAI6 | 6" | 150 | 3.94 | 10.5 | 2.20 | 5.91 | 150 | 0.06 | 9.50 | 11.00 | 1.00 | 0.88 | 8 | 4.02 | 0.87 | 12.87 | 7.01 | M10xP1.5 | 600 | 78.06 |

## PRESSURE TEMPERATURE RATINGS
(ME-PTFE SEATS)

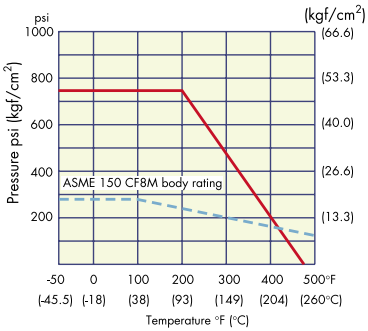


## MATERIALS LIST

| NO. | PART NAME | MATERIAL | QTY |
|---|---|---|---|
| 1 | BODY | ASTM A351 Gr. CF8M | 1 |
| 2 | CAP | ASTM A351 Gr. CF8M | 1 |
| 3 | BALL | ASTM A351 Gr. CF8M | 1 |
| 4 | STEM | ASTM A276 Gr. 316 | 1 |
| 5 | SEAT | ME-PTFE* | 2 |
| 6 | GASKET | ME-PTFE* | 1 |
| 7 | THRUST WASHER | ME-PTFE* | 1 |
| 8 | PACKING | ME-PTFE* | 1 |
| 9 | GLAND | ASTM A351 Gr. CF8 | 1 |
| 10 | STOPPER | SS304 | 1 |
| 11 | SNAP RING | SS304 | 2 |
| 12 | GLAND BOLT | ASTM A193 Gr. B8 | 2 |
| 13 | HANDLE | ASTM A536 Gr. 65, 45 & 12 | 1 |

*ME-PTFE IS MOLECULARLY ENHANCED PTFE

**** SIZES SHOWN ARE APPROXIMATE AND MAY VARY***

PINACLE

## DESIGN FEATURES

- 2 PC 150# Full Port
- Face to face: ANSI B16.10
- Flange dimension: ANSI B16.5
- Wall thickness: ANSI B16.34
- Test standard: API 598
- Option: Anti-static

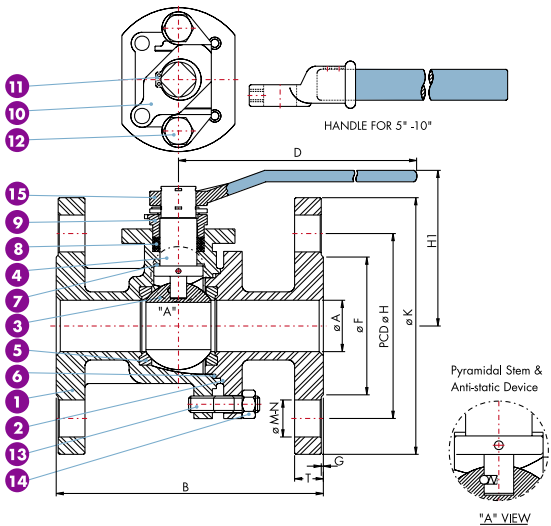

## DIMENSIONS

| CODES | | | A | | B | | F | G | H | K | T | M | N | D | H1 | Cv Factor | Weight Lb |
|---|---|---|---|---|---|---|---|---|---|---|---|---|---|---|---|---|---|
| | inch | mm | inch | mm | inch | mm | inch | inch | inch | inch | inch | inch | | inch | inch | | |
| 13FV205 | 1/2" | 15 | 0.59 | 15.0 | 4.25 | 107.9 | 1.38 | 0.06 | 2.38 | 3.50 | 0.44 | 0.62 | 4 | 5.12 | 2.9 | 19 | 4.41 |
| 13FV2075 | 3/4" | 20 | 0.79 | 20.0 | 4.62 | 117.3 | 1.69 | 0.06 | 2.75 | 3.88 | 0.44 | 0.62 | 4 | 5.12 | 3.0 | 37 | 5.51 |
| 13FV21 | 1" | 25 | 0.98 | 25.0 | 5.00 | 127.0 | 2.00 | 0.06 | 3.12 | 4.25 | 0.44 | 0.62 | 4 | 6.46 | 3.7 | 54 | 6.62 |
| 13FV2125 | 11/4" | 32 | 1.26 | 32.0 | 5.50 | 139.7 | 2.50 | 0.06 | 3.50 | 4.62 | 0.50 | 0.62 | 4 | 6.46 | 3.9 | 103 | 9.5 |
| 13FV215 | 11/2" | 40 | 1.50 | 38.0 | 6.50 | 165.1 | 2.88 | 0.06 | 3.88 | 5.00 | 0.56 | 0.62 | 4 | 8.07 | 4.7 | 143 | 13.5 |
| 13FV22 | 2" | 50 | 1.97 | 50.0 | 7.00 | 177.8 | 3.62 | 0.06 | 4.75 | 6.00 | 0.62 | 0.75 | 4 | 8.07 | 5.2 | 360 | 18.74 |
| 13FV225 | 21/2" | 65 | 2.56 | 65.0 | 7.50 | 190.5 | 4.12 | 0.06 | 5.50 | 7.00 | 0.69 | 0.75 | 4 | 8.07 | 5.3 | 440 | 28.67 |
| 13FV23 | 3" | 80 | 3.15 | 80.0 | 8.00 | 203.2 | 5.00 | 0.06 | 6.00 | 7.50 | 0.75 | 0.75 | 4 | 12.83 | 6.1 | 520 | 39.69 |
| 13FV24 | 4" | 100 | 3.94 | 100.0 | 9.00 | 228.6 | 6.19 | 0.06 | 7.50 | 9.00 | 0.94 | 0.75 | 8 | 12.83 | 6.9 | 820 | 61.74 |
| 13FV25 | 5" | 125 | 4.92 | 125.0 | 14.00 | 355.6 | 7.31 | 0.06 | 8.50 | 10.00 | 0.94 | 0.88 | 8 | 42.20 | 9.4 | 1500 | – |
| 13FV26 | 6" | 150 | 5.91 | 150.0 | 15.50 | 393.7 | 8.50 | 0.06 | 9.50 | 11.00 | 1.00 | 0.88 | 8 | 42.20 | 9.8 | 1920 | 165.38 |
| 13FV28 | 8" | 200 | 7.87 | 200.0 | 18.00 | 457.2 | 10.62 | 0.06 | 11.75 | 13.50 | 1.12 | 0.88 | 8 | 42.52 | 11.7 | 3600 | 286.65 |

## PRESSURE TEMPERATURE RATINGS (BODY)

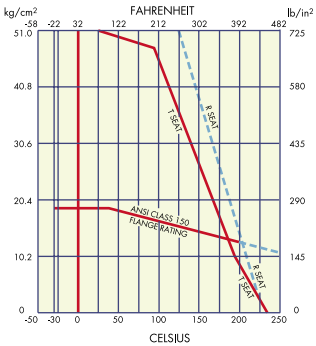


## MATERIALS LIST

| NO. | PART NAME | MATERIAL | QTY |
|---|---|---|---|
| 1 | BODY | ASTM A351 Gr. CF8M | 1 |
| 2 | CAP | ASTM A351 Gr. CF8M | 1 |
| 3 | BALL | ASTM A351 Gr. CF8M | 1 |
| 4 | STEM | ASTM A276 Gr. 316 | 1 |
| 5 | SEAT | PTFE | 2 |
| 6 | GASKET | PTFE | 1 |
| 7 | THRUST WASHER | PTFE | 1 |
| 8 | PACKING | PTFE | 1 |
| 9 | GLAND | ASTM A351 Gr. CF8 | 1 |
| 10 | STOPPER | SS304 | 1 |
| 11 | SNAP RING | SS304 | 2 |
| 12 | GLAND BOLT | ASTM A193 Gr. B8 | 2 |
| 13 | STUD BOLT | ASTM A193 Gr. B8 | 4-12 |
| 14 | SET NUT | ASTM A194 Gr. 8M | 4-12 |
| 15 | HANDLE | ASTM A536 Gr. 65, 45 & 12 | 1 |

**** SIZES SHOWN ARE APPROXIMATE AND MAY VARY***

PINACLE

## DESIGN FEATURES

- 2 PC 300# Full Port
- Face to face: ANSI B16.10
- Flange dimension: ANSI B16.5
- Wall thickness: ANSI B16.34
- Test standard: API 598
- Option: Anti-static

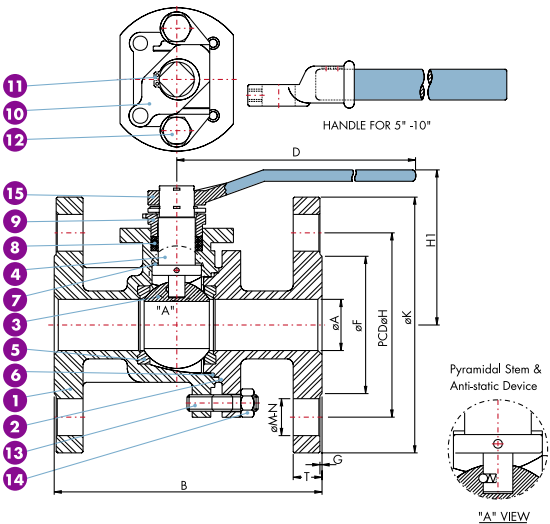

## DIMENSIONS

| CODES | SIZE | | A | | B | | F | G | H | K | T | M | N | D | H1 | Cv Factor | Weight Lb |
|---|---|---|---|---|---|---|---|---|---|---|---|---|---|---|---|---|---|
| | inch | mm | inch | mm | inch | mm | inch | inch | inch | inch | inch | inch | | inch | inch | | |
| 13FVB205 | 1/2" | 15 | 0.59 | 15.0 | 5.50 | 139.7 | 1.38 | 0.06 | 2.62 | 3.75 | 0.56 | 0.62 | 4 | 5.12 | 2.9 | 19 | 5.58 |
| 13FVB2075 | 3/4" | 20 | 0.79 | 20.0 | 6.00 | 152.4 | 1.69 | 0.06 | 3.25 | 4.62 | 0.62 | 0.75 | 4 | 5.12 | 3.0 | 37 | 7.72 |
| 13FVB21 | 1" | 25 | 0.98 | 25.0 | 6.50 | 165.1 | 2.00 | 0.06 | 3.50 | 4.88 | 0.69 | 0.75 | 4 | 6.46 | 3.7 | 54 | 10.1 |
| 13FVB2125 | 11/4" | 32 | 1.26 | 32.0 | 7.00 | 177.8 | 2.50 | 0.06 | 3.88 | 5.25 | 0.75 | 0.75 | 4 | 6.46 | 3.9 | 103 | 13.58 |
| 13FVB215 | 11/2" | 40 | 1.50 | 38.1 | 7.50 | 190.5 | 2.88 | 0.06 | 4.50 | 6.12 | 0.81 | 0.88 | 4 | 8.07 | 4.7 | 143 | 20.95 |
| 13FVB22 | 2" | 50 | 1.97 | 50.0 | 8.50 | 215.9 | 3.62 | 0.06 | 5.00 | 6.50 | 0.88 | 0.75 | 8 | 8.07 | 5.2 | 360 | 24.92 |
| 13FVB225 | 21/2" | 65 | 2.56 | 65.0 | 9.50 | 241.3 | 4.12 | 0.06 | 5.88 | 7.50 | 1.00 | 0.88 | 8 | 8.07 | 5.3 | 440 | 41.45 |
| 13FVB23 | 3" | 80 | 3.15 | 80.0 | 11.12 | 282.4 | 5.00 | 0.06 | 6.62 | 8.25 | 1.12 | 0.88 | 8 | 12.83 | 6.1 | 520 | 58.65 |
| 13FVB24 | 4" | 100 | 3.94 | 100.0 | 12.00 | 304.8 | 6.19 | 0.06 | 7.88 | 10.00 | 1.25 | 0.88 | 8 | 12.83 | 6.9 | 820 | 91.29 |
| 13FVB25 | 5" | 125 | 4.92 | 125.0 | 15.00 | 381.0 | 7.31 | 0.06 | 9.25 | 11.00 | 1.38 | 0.88 | 8 | 42.20 | 9.4 | 1500 | – |
| 13FVB26 | 6" | 150 | 5.91 | 150.0 | 15.88 | 403.3 | 8.50 | 0.06 | 10.62 | 12.50 | 1.44 | 0.88 | 12 | 42.20 | 9.8 | 1920 | 202.86 |
| 13FVB28 | 8" | 200 | 7.87 | 200.0 | 19.75 | 501.6 | 10.62 | 0.06 | 13.00 | 15.00 | 1.62 | 1.00 | 12 | 42.52 | 11.73 | 3600 | 384.33 |

## PRESSURE TEMPERATURE RATINGS (BODY)

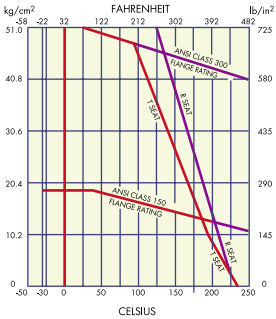


## MATERIALS LIST

| NO. | PART NAME | MATERIAL | QTY |
|---|---|---|---|
| 1 | BODY | ASTM A351 Gr. CF8M | 1 |
| 2 | CAP | ASTM A351 Gr. CF8M | 1 |
| 3 | BALL | ASTM A351 Gr. CF8M | 1 |
| 4 | STEM | ASTM A276 Gr. 316 | 1 |
| 5 | SEAT | PTFE+15% G/F | 2 |
| 6 | GASKET | PTFE | 1 |
| 7 | THRUST WASHER | PTFE | 1 |
| 8 | PACKING | PTFE | 1 |
| 9 | GLAND | ASTM A351 Gr. CF8 | 1 |
| 10 | STOPPER | SS304 | 1 |
| 11 | SNAP RING | SS304 | 2 |
| 12 | GLAND BOLT | ASTM A193 Gr. B8 | 2 |
| 13 | STUD BOLT | ASTM A193 Gr. B8 | 4-12 |
| 14 | SET NUT | ASTM A194 Gr. 8M | 4-12 |
| 15 | HANDLE | ASTM A536 Gr. 65, 45 & 12 | 1 |

**** SIZES SHOWN ARE APPROXIMATE AND MAY VARY***

PINACLE

## DESIGN FEATURES

- 2 PC 150# Full Port FS
- Steam rating: 150 PSI WSP
- ISO 5211 actuator mounting pad
- Blow-out-proof stem design
- Anti-static device
- Adjustable stem packing
- Locking device
- Body: ASTM A351 Gr.CF8M for TC-5000
  ASTM A216 Gr.WCB for TC-5100
- ME-PTFE Seal Kits: Replaces PTFE, RPTFE and FPA
  Low deformation under load
  Low permeation
- Temperature rating: -45.5°C (-50°F) to 246°C (475°F)
- Long cycle life
- ANSI B16.5, B16.10 and B16.34 full compliance
- Test standard: API 598
- API 607 approval

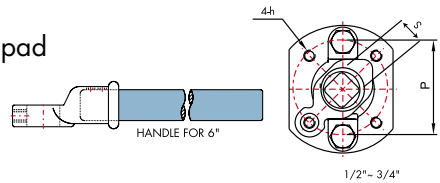


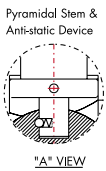


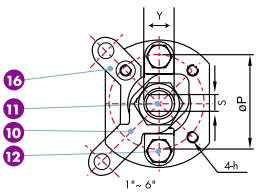


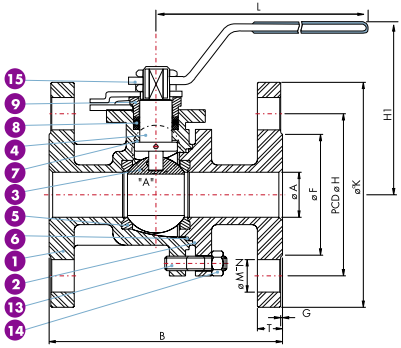

## DIMENSIONS

| SIZE | | A | B | F | G | H | K | T | M | N | P | | L | H1 | h | Cv Factor | Weight Lb |
|---|---|---|---|---|---|---|---|---|---|---|---|---|---|---|---|---|---|
| inch | mm | inch | inch | inch | inch | inch | inch | inch | inch | | inch | mm | inch | inch | | | |
| 1/2" | 15 | 0.59 | 4.25 | 1.38 | 0.06 | 2.38 | 3.50 | 0.44 | 0.62 | 4 | 1.65 | 42 | 5.18 | 2.91 | M5xP0.8 | 26 | 4.41 |
| 3/4" | 20 | 0.79 | 4.62 | 1.69 | 0.06 | 2.75 | 3.88 | 0.44 | 0.62 | 4 | 1.65 | 42 | 5.18 | 2.94 | M5xP0.8 | 55 | 5.51 |
| 1" | 25 | 0.98 | 5.00 | 2.00 | 0.06 | 3.12 | 4.25 | 0.44 | 0.62 | 4 | 1.97 | 50 | 6.42 | 3.44 | M6xP1.0 | 110 | 6.62 |
| 11/4" | 32 | 1.26 | 5.50 | 2.50 | 0.06 | 3.50 | 4.62 | 0.50 | 0.62 | 4 | 1.97 | 50 | 6.42 | 3.63 | M6xP1.0 | 180 | 9.92 |
| 11/2" | 40 | 1.50 | 6.50 | 2.88 | 0.06 | 3.88 | 5.00 | 0.56 | 0.62 | 4 | 2.76 | 70 | 9.13 | 4.76 | M8xP1.25 | 270 | 13.23 |
| 2" | 50 | 1.97 | 7.00 | 3.62 | 0.06 | 4.75 | 6.00 | 0.62 | 0.75 | 4 | 2.76 | 70 | 9.13 | 5.08 | M8xP1.25 | 500 | 18.74 |
| 21/2" | 65 | 2.56 | 7.50 | 4.12 | 0.06 | 5.50 | 7.00 | 0.69 | 0.75 | 4 | 2.76 | 70 | 9.13 | 5.55 | M8xP1.25 | 800 | 28.67 |
| 3" | 80 | 3.15 | 8.00 | 5.00 | 0.06 | 6.00 | 7.50 | 0.75 | 0.75 | 4 | 4.02 | 102 | 12.87 | 6.52 | M10xP1.5 | 1150 | 39.69 |
| 4" | 100 | 3.94 | 9.00 | 6.19 | 0.06 | 7.50 | 9.00 | 0.94 | 0.75 | 8 | 4.02 | 102 | 12.87 | 7.11 | M10xP1.5 | 2120 | 61.74 |
| 6" | 150 | 5.91 | 15.50 | 8.50 | 0.06 | 9.50 | 11.00 | 1.00 | 0.88 | 8 | 4.92 | 125 | 42.26 | 9.95 | M12xP1.75 | 5100 | 165.38 |

## PRESSURE TEMPERATURE RATINGS
(ME-PTFE SEATS)

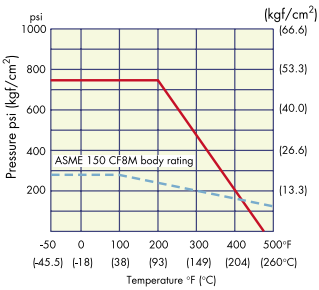


## MATERIALS LIST

| NO. | PART NAME | MATERIAL | QTY |
|---|---|---|---|
| 1 | BODY | ASTM A351 Gr. CF8M | 1 |
| 2 | CAP | ASTM A351 Gr. CF8M | 1 |
| 3 | BALL | ASTM A351 Gr. CF8M | 1 |
| 4 | STEM | ASTM A276 Gr. 316 | 1 |
| 5 | SEAT | ME-PTFE* | 2 |
| 6 | GASKET | SPIRAL-WOUND GASKET | 1 |
| 7 | THRUST WASHER | ME-PTFE* | 1 |
| 8 | PACKING | ME-PTFE* | 1 |
| 9 | GLAND | ASTM A351 Gr. CF8 | 1 |
| 10 | STOPPER | SS304 | 1 |
| 11 | SNAP RING | SS304 | 2 |
| 12 | GLAND BOLT | ASTM A193 Gr. B8 | 2 |
| 13 | STUD BOLT | ASTM A193 Gr. B8 | 4~10 |
| 14 | SET NUT | ASTM A194 Gr. 8 | 4~10 |
| 15 | HANDLE | SS304 | 1 |
| 16 | LOCKING PLATE | SS304 | 1 |

*ME-PTFE IS MOLECULARLY ENHANCED PTFE

**** SIZES SHOWN ARE APPROXIMATE AND MAY VARY***

## DESIGN FEATURES

- Pressure rating: 200 PSI WOG (NON-SHOCK)
- Steam Rating: 150 PSI WSP
- Investment cast body & cap
- Screwed cap
- Swing type disc

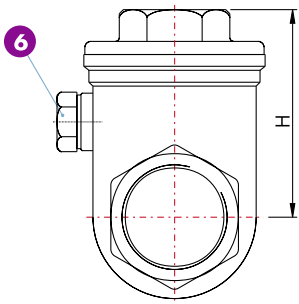


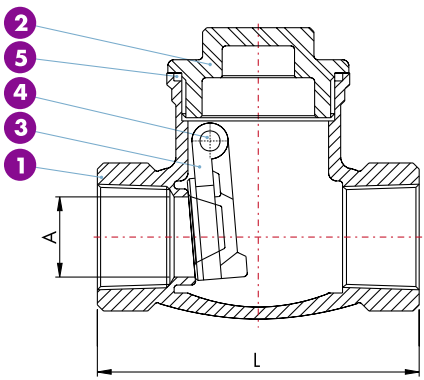

## DIMENSIONS

| CODES | SIZE | | A | | L | | H | | Cv Factor | Weight Lb |
|---|---|---|---|---|---|---|---|---|---|---|
| | inch | mm | inch | mm | inch | mm | inch | mm | | |
| 13TCV025 | 1/4" | 8 | 0.39 | 10 | 2.56 | 65.0 | 1.77 | 45 | – | 0.73 |
| 13TCV0375 | 3/8" | 10 | 0.47 | 12 | 2.56 | 65.0 | 1.77 | 45 | 4 | 0.68 |
| 13TCV05 | 1/2" | 15 | 0.59 | 15 | 2.60 | 66.0 | 1.81 | 46 | 6.5 | 0.64 |
| 13TCV075 | 3/4" | 20 | 0.79 | 20 | 3.19 | 81.0 | 2.13 | 54 | 15 | 1.08 |
| 13TCV1 | 1" | 25 | 0.98 | 25 | 3.58 | 91.0 | 2.36 | 60 | 28 | 1.52 |
| 13TCV125 | 11/4" | 32 | 1.26 | 32 | 4.19 | 106.5 | 2.83 | 72 | 45 | 2.32 |
| 13TCV15 | 11/2" | 40 | 1.57 | 40 | 4.76 | 121.0 | 2.95 | 75 | 65 | 3.48 |
| 13TCV2 | 2" | 50 | 1.97 | 50 | 5.59 | 142.0 | 3.23 | 82 | 120 | 5.16 |
| 13TCV25 | 21/2" | 65 | 2.56 | 65 | 6.26 | 159.0 | 3.54 | 90 | 180 | 8.38 |
| 13TCV3 | 3" | 80 | 3.15 | 80 | 7.48 | 190.0 | 4.09 | 104 | 280 | 13.01 |

## PRESSURE TEMPERATURE RATINGS (BODY)

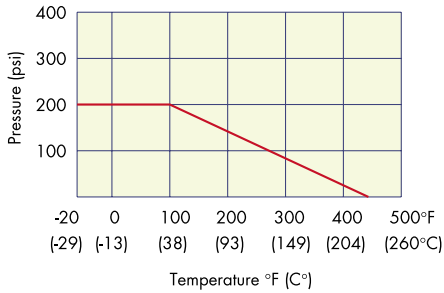


## MATERIALS LIST

| NO. | PART NAME | MATERIAL | QTY |
|---|---|---|---|
| 1 | BODY | ASTM A351 Gr. CF8M | 1 |
| 2 | CAP | ASTM A351 Gr. CF8M | 1 |
| 3 | DISC | ASTM A351 Gr. CF8M | 1 |
| 4 | HINGE PIN | SS316 | 1 |
| 5 | GASKET | PTFE | 1 |
| 6 | PLUG | SS316 | 1 |

**** SIZES SHOWN ARE APPROXIMATE AND MAY VARY***

## DESIGN FEATURES

- Investment cast body & cap
- Screwed-in cap
- Connecting threads: ANSI B2.1/BS21

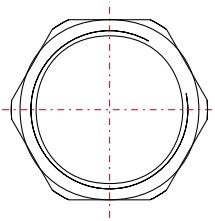

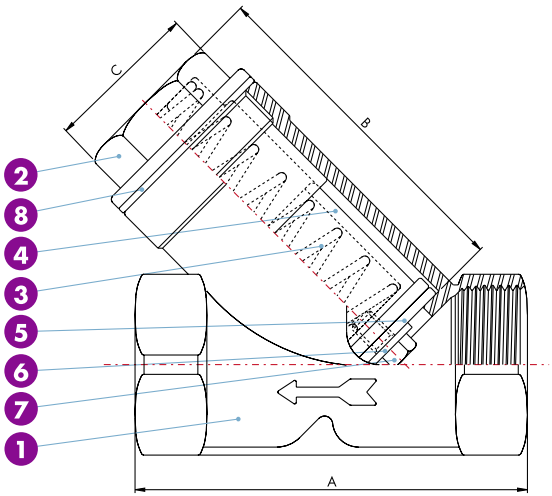

## DIMENSIONS

| CODES | SIZE | | A | | B | | C | | Cv Factor | Weight Lb | Cracking Pressure |
|---|---|---|---|---|---|---|---|---|---|---|---|
| | inch | mm | inch | mm | inch | mm | inch | mm | | | |
| 13TYC025 | 1/4" | 8 | 2.56 | 65 | 1.81 | 46 | 0.75 | 19 | 2 | 0.62 | 0.435 |
| 13TYC0375 | 3/8" | 10 | 2.56 | 65 | 1.81 | 46 | 0.75 | 19 | 3.8 | 0.54 | 0.435 |
| 13TYC05 | 1/2" | 15 | 2.56 | 65 | 1.81 | 46 | 0.75 | 19 | 6.3 | 0.71 | 0.435 |
| 13TYC075 | 3/4" | 20 | 3.15 | 80 | 2.28 | 58 | 0.91 | 23 | 14 | 0.95 | 0.464 |
| 13TYC1 | 1" | 25 | 3.54 | 90 | 2.72 | 69 | 1.06 | 27 | 27 | 1.62 | 0.464 |
| 13TYC125 | 11/4" | 32 | 4.13 | 105 | 2.95 | 75 | 1.26 | 32 | 43 | 2.15 | 0.508 |
| 13TYC15 | 11/2" | 40 | 4.72 | 120 | 3.35 | 85 | 1.61 | 41 | 64 | 3.15 | 0.508 |
| 13TYC2 | 2" | 50 | 5.51 | 140 | 3.86 | 98 | 1.97 | 50 | 116 | 4.85 | 0.580 |
| 13TYC25 | 21/2" | 65 | 6.69 | 170 | 4.62 | 117 | 2.56 | 65 | 185 | 9.75 | 0.653 |
| 13TYC3 | 3" | 80 | 7.87 | 200 | 5.35 | 136 | 3.15 | 80 | 270 | 14.35 | - |

## PRESSURE TEMPERATURE RATINGS (BODY)

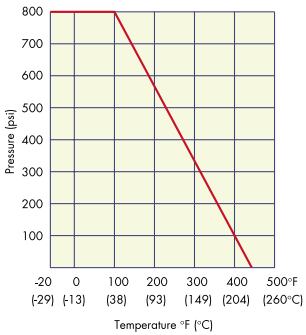


## MATERIALS LIST

| NO. | PART NAME | MATERIAL | QTY |
|---|---|---|---|
| 1 | BODY | ASTM A351 Gr. CF8M | 1 |
| 2 | CAP | ASTM A351 Gr. CF8M | 1 |
| 3 | SPRING | SS304 | 1 |
| 4 | DISC | SS316 | 1 |
| 5 | SEAT | TEFLON | 1 |
| 6 | WASHER | SS304 | 1 |
| 7 | BOLT | SS304 | 1 |
| 8 | GASKET PACKING | TEFLON | 1 |

**** SIZES SHOWN ARE APPROXIMATE AND MAY VARY***

## DESIGN FEATURES

- Pressure rating: 200 PSI WOG (NON-SHOCK)
- Investment cast body & bonnet
- Screwed bonnet
- Rising stem and wheel

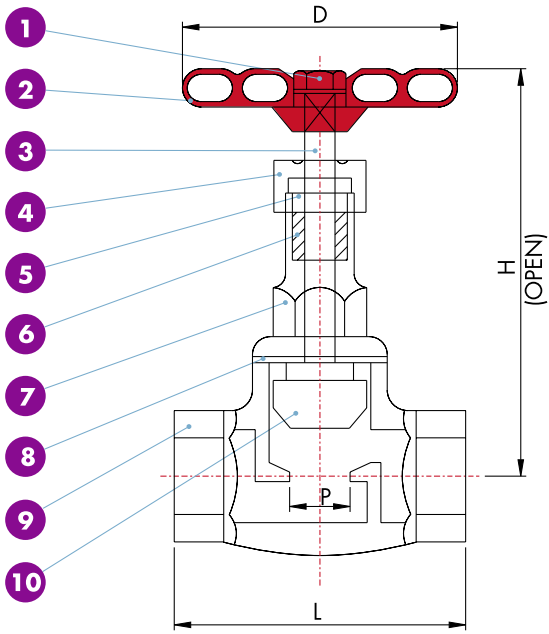

# 200 WOG GLOBE VALVE, THREADED

## DIMENSIONS

| CODES | SIZE | | P | | L | | H ( OPEN ) | | D | | Cv Factor | Weight Lb |
|---|---|---|---|---|---|---|---|---|---|---|---|---|
| | inch | mm | inch | mm | inch | mm | inch | mm | inch | mm | | |
| 13TGLV025 | 1/4" | 8 | 0.39 | 10 | 2.05 | 52.0 | 4.02 | 102 | 2.36 | 60.0 | 1 | 1.04 |
| 13TGLV0375 | 3/8" | 10 | 0.47 | 12 | 2.05 | 52.0 | 4.02 | 102 | 2.36 | 60.0 | 1.5 | 1.01 |
| 13TGLV05 | 1/2" | 15 | 0.47 | 12 | 2.60 | 66.0 | 3.74 | 95 | 2.76 | 70.0 | 2.5 | 1.46 |
| 13TGLV075 | 3/4" | 20 | 0.59 | 15 | 2.70 | 68.5 | 3.90 | 99 | 2.76 | 70.0 | 5.6 | 1.46 |
| 13TGLV1 | 1" | 25 | 0.79 | 20 | 3.08 | 78.3 | 4.02 | 102 | 3.01 | 76.5 | 10.5 | 2.1 |
| 13TGLV125 | 11/4" | 32 | 0.98 | 25 | 3.39 | 86.0 | 4.96 | 126 | 4.07 | 103.5 | 17 | 3.11 |
| 13TGLV15 | 11/2" | 40 | 1.30 | 33 | 3.86 | 98.0 | 5.35 | 136 | 4.07 | 103.5 | 25 | 4.83 |
| 13TGLV2 | 2" | 50 | 1.57 | 40 | 4.35 | 110.5 | 6.14 | 156 | 4.76 | 121.0 | 46 | 6.09 |

## PRESSURE TEMPERATURE RATINGS (BODY)

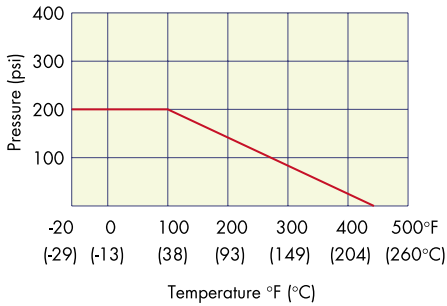


## MATERIALS LIST

| NO. | PART NAME | MATERIAL | QTY |
|---|---|---|---|
| 1 | NUT | SS304 | 1 |
| 2 | HANDWHEEL | SS400 | 1 |
| 3 | STEM | ASTM A276 Gr. 316 | 1 |
| 4 | GLAND NUT | ASTM A351 Gr. CF8M | 1 |
| 5 | GLAND | ASTM A351 Gr. CF8M | 1 |
| 6 | GLAND PACKING | PTFE | 1 |
| 7 | BONNET | ASTM A351 Gr. CF8M | 1 |
| 8 | GASKET | PTFE | 1 |
| 9 | BODY | ASTM A351 Gr. CF8M | 1 |
| 10 | DISC | ASTM A351 Gr. CF8M | 1 |

**** SIZES SHOWN ARE APPROXIMATE AND MAY VARY***

## DESIGN FEATURES

- Pressure rating: 200 PSI WOG (NON-SHOCK)
- Investment cast body & bonnet
- Non-rising stem
- Solid wedge disc

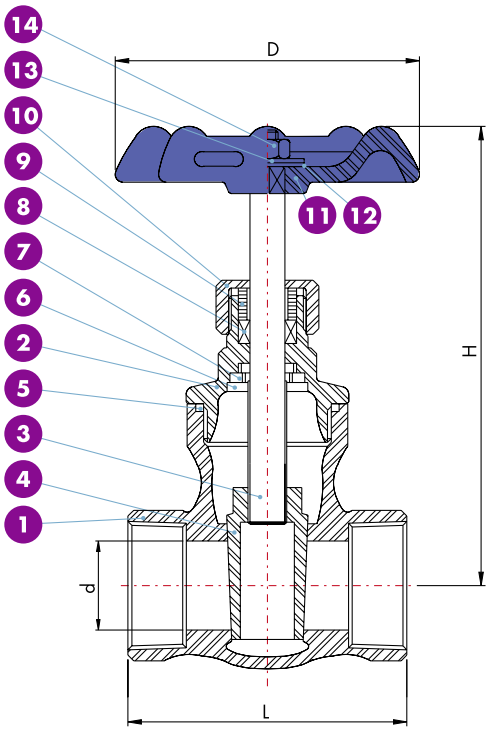

## DIMENSIONS

| CODES | SIZE | | d | | L | | H | | D | | Cv Factor | Weight Lb |
|---|---|---|---|---|---|---|---|---|---|---|---|---|
| | inch | mm | inch | mm | inch | mm | inch | mm | inch | mm | | |
| 13TGAV05 | 1/2" | 15 | 0.63 | 16.1 | 2.24 | 57.0 | 3.88 | 98.6 | 2.76 | 70.0 | 15 | 0.93 |
| 13TGAV075 | 3/4" | 20 | 0.80 | 20.3 | 2.38 | 60.5 | 4.06 | 103.0 | 2.76 | 70.0 | 37 | 1.24 |
| 13TGAV1 | 1" | 25 | 1.02 | 26.0 | 2.64 | 67.0 | 4.53 | 115.0 | 3.01 | 76.5 | 72 | 1.61 |
| 13TGAV125 | 11/4" | 32 | 1.25 | 31.8 | 2.99 | 76.0 | 5.04 | 128.0 | 3.01 | 76.5 | 110 | 2.14 |
| 13TGAV15 | 11/2" | 40 | 1.57 | 40.0 | 3.43 | 87.0 | 6.81 | 173.0 | 4.07 | 103.5 | 165 | 2.96 |
| 13TGAV2 | 2" | 50 | 1.98 | 50.3 | 3.74 | 95.0 | 7.44 | 189.0 | 4.76 | 121.0 | 320 | 4.26 |

## PRESSURE TEMPERATURE RATINGS (BODY)

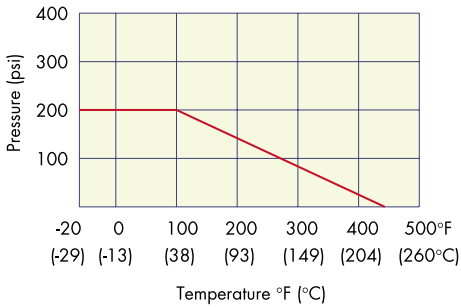


## MATERIALS LIST

| NO. | PART NAME | MATERIAL | QTY |
|---|---|---|---|
| 1 | BODY | ASTM A351 Gr. CF8M | 1 |
| 2 | BONNET | ASTM A351 Gr. CF8M | 1 |
| 3 | STEM | ASTM A276 Gr. 316 | 1 |
| 4 | DISC | ASTM A351 Gr. CF8M | 1 |
| 5 | GASKET | PTFE | 1 |
| 6 | STOP RING | SS304 | 1 |
| 7 | STEM HOLDER | SS316 | 1 |
| 8 | STEM PACKING | PTFE | 1 |
| 9 | GLAND | SS304 | 1 |
| 10 | GLAND NUT | SS316 | 1 |
| 11 | HANDLEWHEEL | SS400 | 1 |
| 12 | NAME PLATE | ALUMINUM | 1 |
| 13 | HANDLEWHEEL WASHER | SS304 | 1 |
| 14 | HANDLEWHEEL NUT | SS304 | 1 |

**** SIZES SHOWN ARE APPROXIMATE AND MAY VARY***

PINACLE

## DESIGN FEATURES

- "L" Port
- Pressure rating: 1000 PSI WOG (NON-SHOCK)
- Steam Rating: 150 PSI WSP
- Investment cast body & cap
- Bottom-loaded, Blow-out-proof stem
- Adjustable stem packing
- Stainless Steel handle with vinyl grip
- Locking device

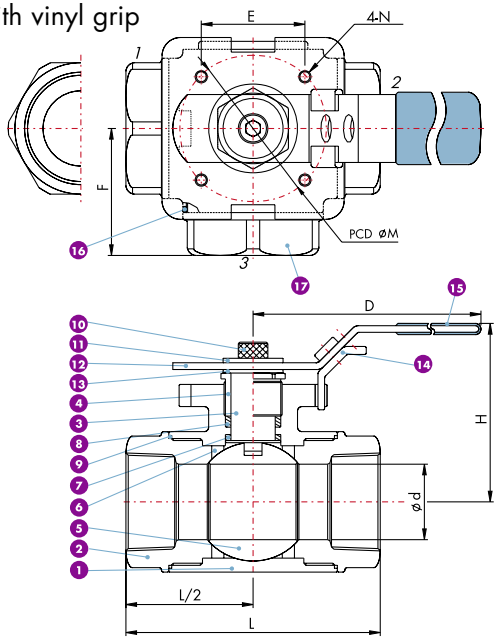

# 1000 WOG BALL VALVE, THREADED "L" PORT

## DIMENSIONS

| CODES | SIZE | | d | | L | | H | D | E | | F | | M | | N | Cv Factor | Weight Lb |
|---|---|---|---|---|---|---|---|---|---|---|---|---|---|---|---|---|---|
| | inch | mm | inch | mm | inch | mm | inch | inch | inch | mm | inch | mm | inch | mm | | | |
| 13TBVL025 | 1/4" | 8 | 0.43 | 11.0 | 2.68 | 68 | 2.28 | 4.17 | 1.17 | 29.7 | 1.34 | 34.0 | 1.65 | 42 | M5 x P0.8 | 6.0 | 1.32 |
| 13TBVL0375 | 3/8" | 10 | 0.43 | 11.0 | 2.68 | 68 | 2.28 | 4.17 | 1.17 | 29.7 | 1.34 | 34.0 | 1.65 | 42 | M5 x P0.8 | 6.0 | 1.32 |
| 13TBVL05 | 1/2" | 15 | 0.50 | 12.7 | 2.95 | 75 | 2.40 | 5.43 | 1.17 | 29.7 | 1.48 | 37.5 | 1.65 | 42 | M5 x P0.8 | 12.0 | 1.47 |
| 13TBVL075 | 3/4" | 20 | 0.63 | 16.0 | 3.39 | 86 | 2.91 | 5.43 | 1.39 | 35.4 | 1.69 | 43.0 | 1.97 | 50 | M6 x P1.0 | 15.5 | 2.62 |
| 13TBVL1 | 1" | 25 | 0.79 | 20.0 | 4.06 | 103 | 3.19 | 6.38 | 1.39 | 35.4 | 2.03 | 51.5 | 1.97 | 50 | M6 x P1.0 | 20.0 | 3.75 |
| 13TBVL125 | 11/4" | 32 | 0.98 | 25.0 | 4.53 | 115 | 3.46 | 6.38 | 1.39 | 35.4 | 2.26 | 57.5 | 1.97 | 50 | M6 x P1.0 | 37.0 | 5.27 |
| 13TBVL15 | 11/2" | 40 | 1.26 | 32.0 | 4.92 | 125 | 4.09 | 8.66 | 1.95 | 49.5 | 2.46 | 62.5 | 2.76 | 70 | M8 x P1.25 | 103.0 | 7.5 |
| 13TBVL2 | 2" | 50 | 1.50 | 38.1 | 5.75 | 146 | 4.33 | 8.66 | 1.95 | 49.5 | 2.87 | 73.0 | 2.76 | 70 | M8 x P1.25 | 143.0 | 12.13 |

## PRESSURE TEMPERATURE RATINGS (BODY)

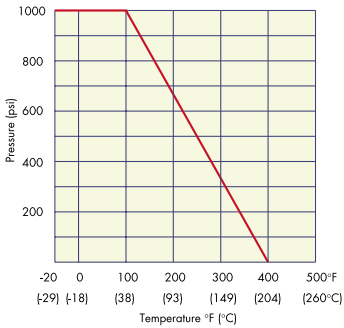


## MATERIALS LIST

| NO. | PART NAME | MATERIAL | QTY |
|---|---|---|---|
| 1 | BODY | ASTM A351 Gr. CF8M | 1 |
| 2 | CAP2 | ASTM A351 Gr. CF8M | 2 |
| 3 | STEM | ASTM A276 Gr. 316 | 1 |
| 4 | GLAND NUT | SS304 | 1 |
| 5 | BALL | ASTM A351 Gr. CF8M | 1 |
| 6 | SEAT | PTFE+15% G/F | 4 |
| 7 | THRUST WASHER | PTFE | 1 |
| 8 | PACKINGS | PTFE | 1 |
| 9 | JOINT GASKET1 | PTFE | 2 |
| 10 | STEM BOLT | SS304 | 1 |
| 11 | WASHER | SS304 | 1 |
| 12 | HANDLE | SS304 | 1 |
| 13 | STEM WASHER | SS304 | 1 |
| 14 | LOCATING LOCK* | SS304 | 1 |
| 15 | HANDLE SLEEVE | VINYL GRIP | 1 |
| 16 | JOINT GASKET | PTFE | 1 |
| 17 | CAP1 | ASTM A351 Gr. CF8M | 1 |

* OPTION

**** SIZES SHOWN ARE APPROXIMATE AND MAY VARY***

## DESIGN FEATURES

- "T" Port
- Pressure rating: 1000 PSI WOG (NON-SHOCK)
- Steam Rating: 150 PSI WSP
- Investment cast body & cap
- Bottom-loaded, Blow-out-proof stem
- Adjustable stem packing
- Actuator mounting pad
- Stainless Steel handle with vinyl grip
- Locking device

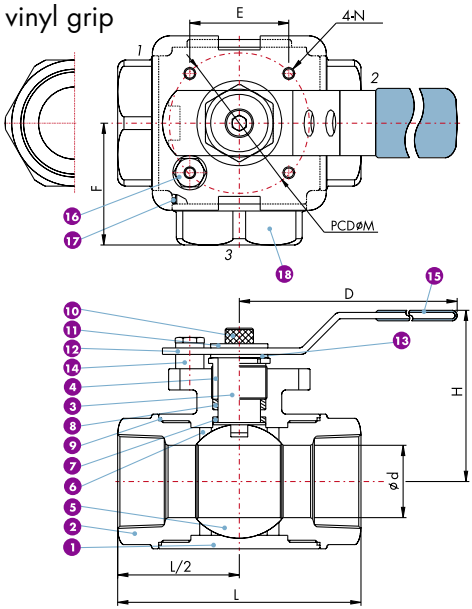

# 1000 WOG BALL VALVE, THREADED "T" PORT

## DIMENSIONS

| CODES | SIZE | | d | | L | | H | D | E | | F | | M | | N | Cv Factor | Weight Lb |
|---|---|---|---|---|---|---|---|---|---|---|---|---|---|---|---|---|---|
| | inch | mm | inch | mm | inch | mm | inch | inch | inch | mm | inch | mm | inch | mm | | | |
| 13TBVT025 | 1/4" | 8 | 0.43 | 11.0 | 2.68 | 68 | 2.28 | 4.17 | 1.17 | 29.7 | 1.34 | 34.0 | 1.65 | 42 | M5 x P0.8 | 6.0 | 1.32 |
| 13TBVT0375 | 3/8" | 10 | 0.43 | 11.0 | 2.68 | 68 | 2.28 | 4.17 | 1.17 | 29.7 | 1.34 | 34.0 | 1.65 | 42 | M5 x P0.8 | 6.0 | 1.32 |
| 13TBVT05 | 1/2" | 15 | 0.50 | 12.7 | 2.95 | 75 | 2.40 | 5.43 | 1.17 | 29.7 | 1.48 | 37.5 | 1.65 | 42 | M5 x P0.8 | 12.0 | 1.47 |
| 13TBVT075 | 3/4" | 20 | 0.63 | 16.0 | 3.39 | 86 | 2.91 | 5.43 | 1.39 | 35.4 | 1.69 | 43.0 | 1.97 | 50 | M6 x P1.0 | 15.5 | 2.62 |
| 13TBVT1 | 1" | 25 | 0.79 | 20.0 | 4.06 | 103 | 3.19 | 6.38 | 1.39 | 35.4 | 2.03 | 51.5 | 1.97 | 50 | M6 x P1.0 | 20.0 | 3.75 |
| 13TBVT125 | 11/4" | 32 | 0.98 | 25.0 | 4.53 | 115 | 3.46 | 6.38 | 1.39 | 35.4 | 2.26 | 57.5 | 1.97 | 50 | M6 x P1.0 | 37.0 | 5.27 |
| 13TBVT15 | 11/2" | 40 | 1.26 | 32.0 | 4.92 | 125 | 4.09 | 8.66 | 1.95 | 49.5 | 2.46 | 62.5 | 2.76 | 70 | M8 x P1.25 | 103.0 | 7.5 |
| 13TBVT2 | 2" | 50 | 1.50 | 38.1 | 5.75 | 146 | 4.33 | 8.66 | 1.95 | 49.5 | 2.87 | 73.0 | 2.76 | 70 | M8 x P1.25 | 143.0 | 12.13 |

## PRESSURE TEMPERATURE RATINGS (BODY)

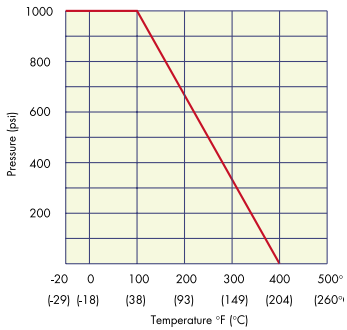


## MATERIALS LIST

| NO. | PART NAME | MATERIAL | QTY |
|---|---|---|---|
| 1 | BODY | ASTM A351 Gr. CF8M | 1 |
| 2 | CAP2 | ASTM A351 Gr. CF8M | 2 |
| 3 | STEM | ASTM A276 Gr. 316 | 1 |
| 4 | GLAND NUT | SS304 | 1 |
| 5 | BALL | ASTM A351 Gr. CF8M | 1 |
| 6 | SEAT | PTFE+15% G/F | 4 |
| 7 | THRUST WASHER | PTFE | 1 |
| 8 | PACKINGS | PTFE | 1 |
| 9 | JOINT GASKET1 | PTFE | 2 |
| 10 | STEM BOLT | SS304 | 1 |
| 11 | WASHER | SS304 | 1 |
| 12 | HANDLE | SS304 | 1 |
| 13 | STEM WASHER | SS304 | 1 |
| 14 | SET SCREW | SS304 | 1 |
| 15 | HANDLE SLEEVE | VINYL GRIP | 1 |
| 16 | SET BOLT | SS304 | 1 |
| 17 | JOINT GASKET | PTFE | 1 |
| 18 | CAP1 | ASTM A351 Gr. CF8M | 1 |

**** SIZES SHOWN ARE APPROXIMATE AND MAY VARY***

PINACLE

## DESIGN FEATURES

- 800 WOG
- Investment cast body & cap
- SS316 screen. 4 mm thick perforated, 1.0 mm hole with 2.0 mm staggering
- Screwed-in cap
- Connecting threads: ANSI B2.1/BS21

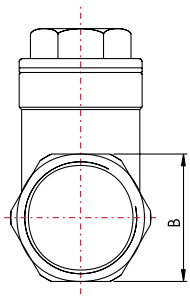


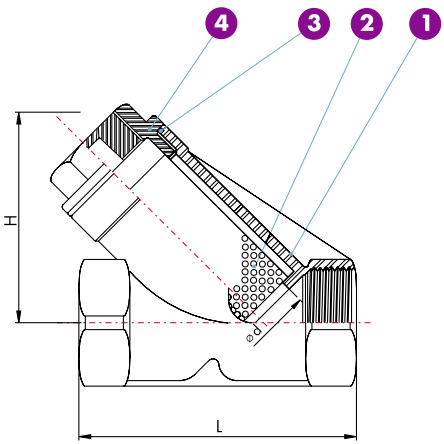

## DIMENSIONS

| CODES | SIZE | | d | | B | | H | | L | | Weight | |
|---|---|---|---|---|---|---|---|---|---|---|---|---|
| | inch | mm | inch | mm | inch | mm | inch | mm | inch | mm | Kg | Lb |
| 13TYS025 | 1/4" | 8 | 0.31 | 8 | 1.02 | 26 | 2.01 | 51 | 2.56 | 65 | 0.26 | 0.57 |
| 13TYS0375 | 3/8" | 10 | 0.39 | 10 | 1.02 | 26 | 2.01 | 51 | 2.56 | 65 | 0.23 | 0.50 |
| 13TYS05 | 1/2" | 15 | 0.59 | 15 | 1.02 | 26 | 2.01 | 51 | 2.56 | 65 | 0.30 | 0.66 |
| 13TYS075 | 3/4" | 20 | 0.79 | 20 | 1.30 | 33 | 2.36 | 60 | 3.15 | 80 | 0.40 | 0.88 |
| 13TYS1 | 1" | 25 | 0.98 | 25 | 1.61 | 41 | 2.83 | 72 | 3.54 | 90 | 0.70 | 1.54 |
| 13TYS125 | 11/4" | 32 | 1.26 | 32 | 1.93 | 49 | 3.03 | 77 | 4.13 | 105 | 0.90 | 1.99 |
| 13TYS15 | 11/2" | 40 | 1.57 | 40 | 2.20 | 56 | 3.43 | 87 | 4.72 | 120 | 1.30 | 2.87 |
| 13TYS2 | 2" | 50 | 1.97 | 50 | 2.72 | 69 | 4.06 | 103 | 5.51 | 140 | 2.10 | 4.63 |
| 13TYS25 | 21/2" | 65 | 2.56 | 65 | 3.43 | 87 | 4.72 | 120 | 6.69 | 170 | 4.30 | 9.47 |
| 13TYS3 | 3" | 80 | 3.15 | 80 | 4.02 | 102 | 5.51 | 140 | 7.87 | 200 | 6.30 | 13.88 |

## PRESSURE TEMPERATURE RATINGS

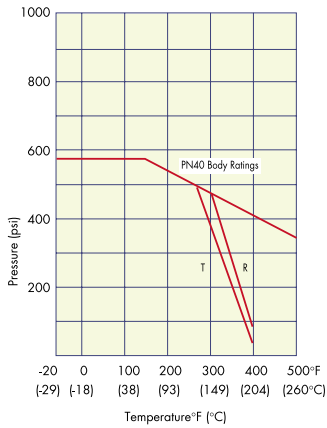


## MATERIALS LIST

| NO. | PART NAME | MATERIAL | QTY |
|---|---|---|---|
| 1 | BODY | ASTM A351 Gr. CF8M | 1 |
| 2 | SCREEN | SS316 SCREEN | 1 |
| 3 | GASKET | TEFLON | 1 |
| 4 | CAP | ASTM A351 Gr. CF8M | 1 |

**** SIZES SHOWN ARE APPROXIMATE AND MAY VARY***

## DESIGN FEATURES

- Investment casting
- Screwed-in bonnet
- Rising stem
- T handle operation
- Connecting threads ANSI B2.1, BS21 and DIN
- Working pressure: 6000 lb/IN$^2$

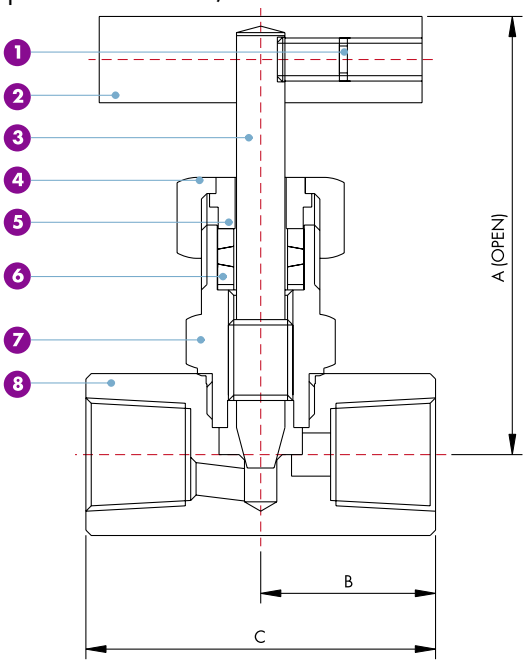

## DIMENSIONS

| CODES | SIZE | | A | | B | | C | | Weight |
|---|---|---|---|---|---|---|---|---|---|
| | inch | mm | inch | mm | inch | mm | inch | mm | Lb |
| 13TNV0125 | 1/8" | 6 | 2.95 | 75 | 1.15 | 29.0 | 2.28 | 58 | 0.65 |
| 13TNV025 | 1/4" | 8 | 2.95 | 75 | 1.15 | 29.0 | 2.28 | 58 | 0.61 |
| 13TNV0375 | 3/8" | 10 | 2.95 | 75 | 1.15 | 29.0 | 2.28 | 58 | 0.73 |
| 13TNV05 | 1/2" | 15 | 3.45 | 87 | 1.28 | 32.5 | 2.56 | 65 | 1.22 |
| 13TNV075 | 3/4" | 20 | 3.55 | 90 | 1.38 | 35.0 | 2.76 | 70 | 1.44 |
| 13TNV1 | 1" | 25 | 4.05 | 103 | 1.58 | 40.0 | 3.15 | 80 | 3.09 |

## MATERIALS LIST

| NO. | PART NAME | SPECIFICATION | QTY |
|---|---|---|---|
| 1 | SET SCREW | SS304 | 1 |
| 2 | HANDLE | SS410 | 1 |
| 3 | STEM | SS316 | 1 |
| 4 | GLAND NUT | SS304 | 1 |
| 5 | GLAND | SS304 | 1 |
| 6 | PACKING | TEFLON | 1 |
| 7 | BONNET | ASTM A351 Gr. CF8M | 1 |
| 8 | BODY | ASTM A351 Gr. CF8M | 1 |

**Please refer to our Section "F" from page F-12 for more needle valves.**

** SIZES SHOWN ARE APPROXIMATE AND MAY VARY*

## DESIGN FEATURES

- Swing type
- Body: ASTM A351 Gr. CF8M
- Disc: ASTM A351 Gr. CF8M
- End Type: Flange end
- Face to Face: ANSI B16.10
- Flange Dimensions: ANSI B16.5 Class 150
- Wall thickness: ANSI B16.34

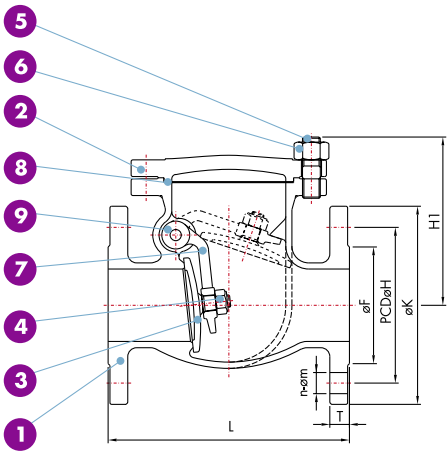

## DIMENSIONS

| CODES | SIZE | | L | | H1 | | K | | H | F | | T | | M | N | Cv Factor | Weight Lb |
|---|---|---|---|---|---|---|---|---|---|---|---|---|---|---|---|---|---|
| | inch | mm | inch | mm | inch | mm | inch | mm | inch | inch | mm | inch | mm | inch | | | |
| 13FCV05 | 1/2" | 15 | 4.25 | 108 | 2.87 | 73 | 3.50 | 89 | 2.38 | 1.38 | 35 | 0.44 | 11.1 | 0.62 | 4 | 9.5 | 5.05 |
| 13FCV075 | 3/4" | 20 | 4.61 | 117 | 2.95 | 75 | 3.86 | 98 | 2.76 | 1.69 | 43 | 0.44 | 11.1 | 0.62 | 4 | 16 | 6.24 |
| 13FCV1 | 1 | 25 | 5.00 | 127 | 3.15 | 80 | 4.25 | 108 | 3.13 | 2.01 | 51 | 0.44 | 11.1 | 0.62 | 4 | 27 | 8.47 |
| 13FCV15 | 11/2" | 40 | 6.50 | 165 | 4.37 | 111 | 5.00 | 127 | 3.88 | 2.87 | 73 | 0.56 | 14.3 | 0.62 | 4 | 70 | 10.23 |
| 13FCV2 | 2" | 50 | 7.99 | 203 | 4.84 | 123 | 5.98 | 152 | 4.74 | 3.62 | 92 | 0.63 | 15.9 | 0.75 | 4 | 120 | 13.36 |
| 13FCV25 | 21/2" | 65 | 8.50 | 216 | 5.28 | 134 | 7.01 | 178 | 5.49 | 4.13 | 105 | 0.69 | 17.5 | 0.75 | 4 | 170 | 27.10 |
| 13FCV3 | 3" | 80 | 9.49 | 241 | 5.83 | 148 | 7.48 | 190 | 6.00 | 5.00 | 127 | 0.75 | 19.1 | 0.75 | 4 | 250 | 48.36 |
| 13FCV4 | 4" | 100 | 11.50 | 292 | 6.22 | 158 | 9.02 | 229 | 7.50 | 6.18 | 157 | 0.94 | 23.9 | 0.75 | 8 | 470 | 72.81 |
| 13FCV5 | 5" | 125 | 12.99 | 330 | 7.56 | 192 | 10.00 | 254 | 8.50 | 7.32 | 186 | 0.94 | 23.9 | 0.88 | 8 | – | 92.61 |
| 13FCV6 | 6" | 150 | 14.02 | 356 | 8.78 | 223 | 10.98 | 279 | 9.51 | 8.50 | 216 | 1.00 | 25.4 | 0.88 | 8 | 1100 | 136.71 |
| 13FCV8 | 8" | 200 | 19.49 | 495 | 11.14 | 283 | 13.50 | 343 | 11.75 | 10.63 | 270 | 1.13 | 28.6 | 0.88 | 8 | 2000 | 233.73 |
| 13FCV10 | 10" | 250 | 24.49 | 622 | 12.52 | 318 | 15.98 | 406 | 14.25 | 12.76 | 324 | 1.19 | 30.2 | 1.00 | 12 | – | 359.42 |
| 13FCV12 | 12" | 300 | 27.48 | 698 | 14.06 | 357 | 19.02 | 483 | 17.01 | 15.00 | 381 | 1.25 | 31.8 | 1.00 | 12 | – | 551.25 |

## MATERIALS LIST

| NO. | PART NAME | MATERIAL SS316 | QTY |
|---|---|---|---|
| 1 | BODY | ASTM A351 Gr. CF8M | 1 |
| 2 | COVER | ASTM A351 Gr. CF8M | 1 |
| 3 | DISC | ASTM A351 Gr. CF8M | 1 |
| 4 | DISC NUT | ASTM A194 Gr. 8 | 1 |
| 5 | COVER BOLT | ASTM A193 Gr. B8 | 4-12 |
| 6 | COVER NUT | ASTM A194 Gr. 8 | 4-12 |
| 7 | ARM | ASTM A351 Gr. CF8M | 1 |
| 8 | GASKET | PTFE | 1 |
| 9 | PLUG | SS316 | 1 |

**Also available in Class 300**

** SIZES SHOWN ARE APPROXIMATE AND MAY VARY*

PINACLE

## DESIGN FEATURES

- Rising stem
- Body: ASTM A351 Gr. CF8M
- Disc: ASTM A351 Gr. CF8M
- Stem: SS316
- End Type: Flange end
- Face to Face: ANSI B16.10
- Flange Dimensions: ANSI B16.5 150 lbs
- Wall thickness: ANSI B16.34

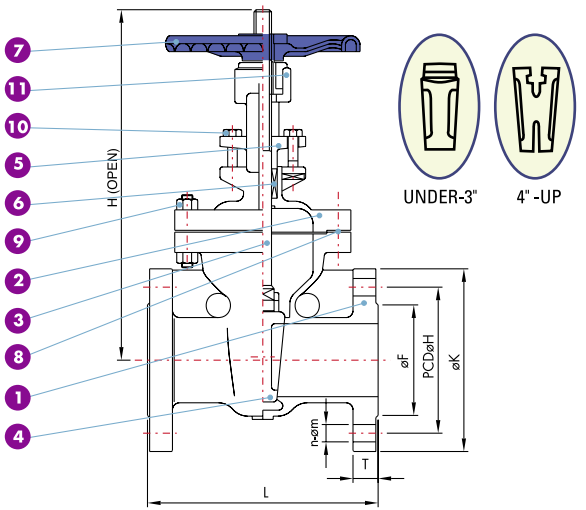

## DIMENSIONS

| CODES | SIZE | | L | | H1 | | K | | H | F | | T | | M | N | Cv Factor | Weight Lb |
|---|---|---|---|---|---|---|---|---|---|---|---|---|---|---|---|---|---|
| | inch | mm | inch | mm | inch | mm | inch | mm | inch | inch | mm | inch | mm | inch | | | |
| 13FGAV05 | 1/2" | 15 | 4.25 | 108 | 8.03 | 204 | 3.94 | 100 | 2.38 | 1.38 | 35 | 0.44 | 11.1 | 0.62 | 4 | 19 | 7.28 |
| 13FGAV075 | 3/4" | 20 | 4.61 | 117 | 8.23 | 209 | 3.94 | 100 | 2.76 | 1.69 | 43 | 0.44 | 11.1 | 0.62 | 4 | 36 | 9.70 |
| 13FGAV1 | 1 | 25 | 5.00 | 127 | 9.02 | 229 | 3.94 | 100 | 3.13 | 2.01 | 51 | 0.44 | 11.1 | 0.62 | 4 | 57 | 11.31 |
| 13FGAV15 | 11/2" | 40 | 6.50 | 165 | 11.14 | 283 | 5.51 | 140 | 3.88 | 2.87 | 73 | 0.56 | 14.3 | 0.62 | 4 | 140 | 17.09 |
| 13FGAV2 | 2" | 50 | 7.01 | 178 | 13.07 | 332 | 6.30 | 160 | 4.74 | 3.62 | 92 | 0.63 | 15.9 | 0.75 | 4 | 240 | 25.09 |
| 13FGAV25 | 21/2" | 65 | 7.48 | 190 | 15.63 | 397 | 7.09 | 180 | 5.49 | 4.13 | 105 | 0.69 | 17.5 | 0.75 | 4 | 360 | 46.31 |
| 13FGAV3 | 3" | 80 | 7.99 | 203 | 17.28 | 439 | 7.87 | 200 | 6.00 | 5.00 | 127 | 0.75 | 19.1 | 0.75 | 4 | 580 | 56.56 |
| 13FGAV4 | 4" | 100 | 9.02 | 229 | 20.39 | 518 | 8.82 | 224 | 7.50 | 6.18 | 157 | 0.94 | 23.9 | 0.75 | 8 | 950 | 82.42 |
| 13FGAV5 | 5" | 125 | 10.00 | 254 | 24.45 | 621 | 9.84 | 250 | 8.52 | 7.32 | 186 | 0.94 | 23.9 | 0.88 | 8 | NA | 110.25 |
| 13FGAV6 | 6" | 150 | 10.51 | 267 | 28.11 | 714 | 11.02 | 280 | 9.51 | 8.50 | 216 | 1.00 | 25.4 | 0.88 | 8 | 2400 | 119.07 |
| 13FGAV8 | 8" | 200 | 11.50 | 292 | 35.98 | 914 | 11.81 | 300 | 11.75 | 10.63 | 270 | 1.13 | 28.6 | 0.88 | 8 | 4200 | 198.45 |
| 13FGAV10 | 10" | 250 | 12.99 | 330 | 43.62 | 1108 | 13.98 | 355 | 14.25 | 12.76 | 324 | 1.19 | 30.2 | 1.00 | 12 | 6800 | 343.98 |
| 13FGAV12 | 12" | 300 | 14.02 | 356 | 61.14 | 1553 | 23.62 | 600 | 17.01 | 15.00 | 381 | 1.25 | 31.8 | 1.00 | 12 | 9900 | 534.71 |

## MATERIALS LIST

| NO. | PART NAME | MATERIAL SS316 | QTY |
|---|---|---|---|
| 1 | BODY | ASTM A351 Gr. CF8M | 1 |
| 2 | BONNET | ASTM A351 Gr. CF8M | 1 |
| 3 | STEM | ASTM A276 Gr. 316 | 1 |
| 4 | DISC | ASTM A351 Gr. CF8M | 1 |
| 5 | GLAND | ASTM A351 Gr. CF8 | 1 |
| 6 | GLAND PACKING | PTFE | 1 |
| 7 | HAND WHEEL | ASTM A536 Gr. B65, 45 & 12 | 1 |
| 8 | GASKET | PTFE (OR NON ASBESTOS) | 1 |
| 9 | BONNET BOLT/NUT | ASTM A193 Gr. B8/ASTM A194 Gr. 8 | 4-16 |
| 10 | GLAND BOLT/NUT | ASTM A193 Gr. B8/ASTM A194 Gr. 8 | 2 |
| 11 | YOKE SLEEVE | BRONZE (OR DUCTILENI-RESIST) | 1 |

**Also available in Class 300**

** SIZES SHOWN ARE APPROXIMATE AND MAY VARY*

PINACLE

## DESIGN FEATURES

- Rising stem
- O.S. & Yoke, Flexible Wedge
- Body: ASTM A351 Gr. CF8M
- Disc: ASTM A351 Gr. CF8M
- Stem: SS316
- Packing: PTFE
- End Type: Flange end
- Face to Face: ANSI B16.10
- Flange Dimensions: ANSI B16.5 150 lbs
- Wall thickness: ANSI B16.34

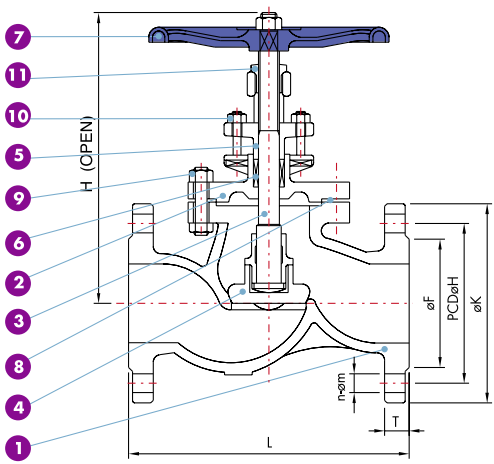

## DIMENSIONS

| CODES | SIZE | | L | | H1 | | K | | H | F | | T | | M | N | Cv Factor | Weight Lb |
|---|---|---|---|---|---|---|---|---|---|---|---|---|---|---|---|---|---|
| | inch | mm | inch | mm | inch | mm | inch | mm | inch | inch | mm | inch | mm | inch | | | |
| 13FGLV05 | 1/2" | 15 | 4.25 | 108 | 6.77 | 172 | 3.94 | 100 | 2.38 | 1.38 | 35 | 0.44 | 11.1 | 0.62 | 4 | 5 | 7.67 |
| 13FGLV075 | 3/4" | 20 | 4.61 | 117 | 6.77 | 172 | 3.94 | 100 | 2.76 | 1.69 | 43 | 0.44 | 11.1 | 0.62 | 4 | 8.5 | 9.31 |
| 13FGLV1 | 1 | 25 | 5.00 | 127 | 6.89 | 175 | 3.94 | 100 | 3.13 | 2.01 | 51 | 0.44 | 11.1 | 0.62 | 4 | 11 | 11.66 |
| 13FGLV15 | 11/2" | 40 | 6.50 | 165 | 8.15 | 207 | 5.51 | 140 | 3.88 | 2.87 | 73 | 0.56 | 14.3 | 0.62 | 4 | 32 | 18.43 |
| 13FGLV2 | 2" | 50 | 7.99 | 203 | 9.13 | 232 | 6.30 | 160 | 4.74 | 3.62 | 92 | 0.63 | 15.9 | 0.75 | 4 | 48 | 28.44 |
| 13FGLV25 | 21/2" | 65 | 8.50 | 216 | 10.75 | 273 | 7.09 | 180 | 5.49 | 4.13 | 105 | 0.69 | 17.5 | 0.75 | 4 | 80 | 44.10 |
| 13FGLV3 | 3" | 80 | 9.49 | 241 | 11.93 | 303 | 7.87 | 200 | 6.00 | 5.00 | 127 | 0.75 | 19.1 | 0.75 | 4 | 110 | 56.91 |
| 13FGLV4 | 4" | 100 | 11.50 | 229 | 13.39 | 340 | 8.82 | 224 | 7.50 | 6.18 | 157 | 0.94 | 23.9 | 0.75 | 8 | 190 | 87.16 |
| 13FGLV5 | 5" | 125 | 14.02 | 356 | 15.16 | 385 | 9.84 | 250 | 8.50 | 7.32 | 186 | 0.94 | 23.9 | 0.88 | 8 | – | 117.97 |
| 13FGLV6 | 6" | 150 | 15.98 | 406 | 17.64 | 448 | 11.81 | 300 | 9.51 | 8.50 | 216 | 1.00 | 25.4 | 0.88 | 8 | 450 | 154.35 |
| 13FGLV8 | 8" | 200 | 19.49 | 495 | 21.46 | 545 | 13.98 | 355 | 11.75 | 10.63 | 270 | 1.13 | 28.6 | 0.88 | 8 | 800 | 294.37 |
| 13FGLV10 | 10" | 250 | 24.49 | 622 | 26.22 | 666 | 17.72 | 450 | 14.25 | 12.76 | 324 | 1.19 | 30.2 | 1.00 | 12 | – | 433.28 |

## MATERIALS LIST

| NO. | PART NAME | MATERIAL SS316 | QTY |
|---|---|---|---|
| 1 | BODY | ASTM A351 Gr. CF8M | 1 |
| 2 | BONNET | ASTM A351 Gr. CF8M | 1 |
| 3 | STEM | ASTM A276 Gr. 316 | 1 |
| 4 | DISC | ASTM A351 Gr. CF8M | 1 |
| 5 | GLAND | ASTM A351 Gr. CF8 | 1 |
| 6 | GLAND PACKING | PTFE | 1 |
| 7 | HAND WHEEL | ASTM A536 Gr. B65, 45 & 12 | 1 |
| 8 | GASKET | PTFE (OR NON ASBESTOS) | 1 |
| 9 | BONNET BOLT/NUT | ASTM A193 Gr. B8/ASTM A194 Gr. 8 | 4-16 |
| 10 | GLAND BOLT/NUT | ASTM A193 Gr. B8/ASTM A194 Gr. 8 | 2 |
| 11 | YOKE SLEEVE | BRONZE (OR DUCTILENI-RESIST) | 1 |

**Also available in Class 300**

** SIZES SHOWN ARE APPROXIMATE AND MAY VARY*

All flow patterns can be changed in the field without disassembling valve

## L-PORT:

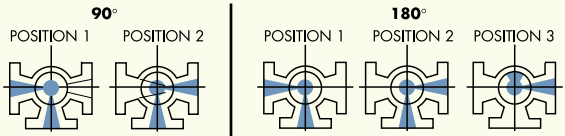


FLOW PLAN A

FLOW PLAN B

## T-PORT: 90°

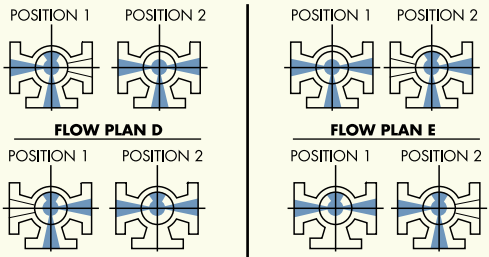


FLOW PLAN D

FLOW PLAN E

FLOW PLAN F

FLOW PLAN G

## T-PORT: 180°

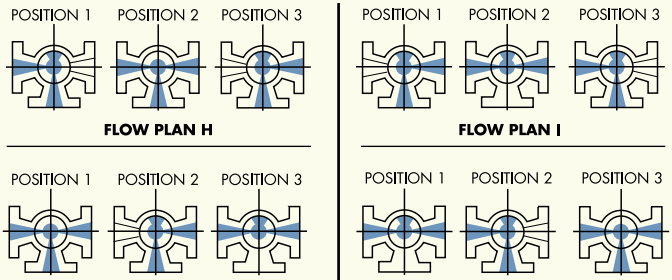


FLOW PLAN H

FLOW PLAN I

FLOW PLAN J

FLOW PLAN K

## *CASTING DESIGNATION*

***CF8 = 304***
***CF8M = 316***
***CF3 = 304-L***
***CF3M = 316-L***

PINACLE

# New product:

## Ball valve type 546 now in DN65 - DN100

**Materials / pressure rating:**
- PVC-U (PN16)
- PVC-C (PN16)
- ABS (PN10)
- PP-H (PN10)

**Options:**
- with or without threaded inserts for easy mounting of the valve available
- electrical positioning feedback with different integrated switches
- lockable handle with ratchet function (5°-pitch)
- valve can be configurated individually

**Valve ends:**
- fusion and cement sockets ISO/DIN, ASTM, BS, JIS
- fusion and cement spigots ISO/DIN
- threaded socket Rp, Rc, NPT
- backing flanges ISO/DIN, ANSI, BS, JIS
- butt fusion spigots SDR11 and SDR17.6
- PE100 electro fusion spigots resp. butt fusion spigots SDR11 und SDR17.6

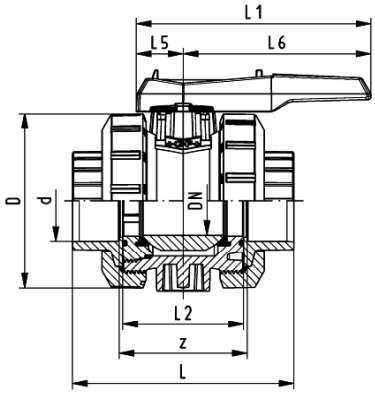


Execution: e.g. fusion/cement socket

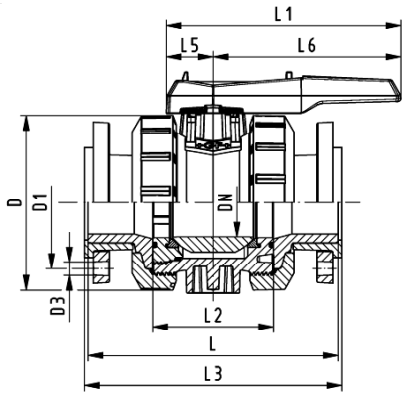


execution: e.g. backing flange PVC-U

Code numbers and dimensions please see ball valve type 546.

# New product:

## Ball valve type 130 - 134 now in DN65 - DN100

**Configuration:**
- Ball valve type 546 DN65 to DN100 in PVC-U, PVC-C, ABS, PP-H
- Electrical actuator EA31 in 24V AC/DC or 100-230V 50-60Hz
- Flange connection for the actuator according to ISO 5211

**Equipment electric actuator:**
- With integrated emergency override
- With optical position indication
- Actuating angle 90°
- Control time 15 sec/90°

**Options and accessories:**
- Electrical positioning feedback in the multifunctional module

**Accessories for actuator EA31:**
- Heating element
- Fail-safe return with battery
- Additional mechanical or inductive limit switches
- Monitoring print for cycle time extension, cycle time monitoring, cycle counter, motor current monitoring
- Position signalization 4-20 mA
- Positioner PE25

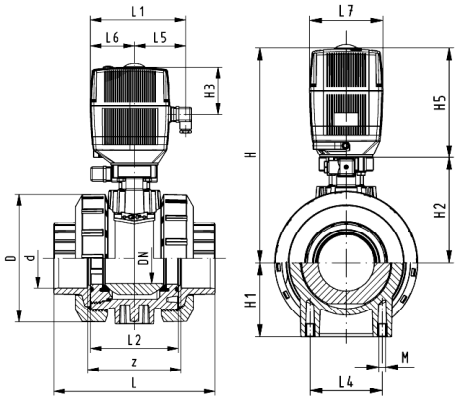


Execution: e.g. with cement socket

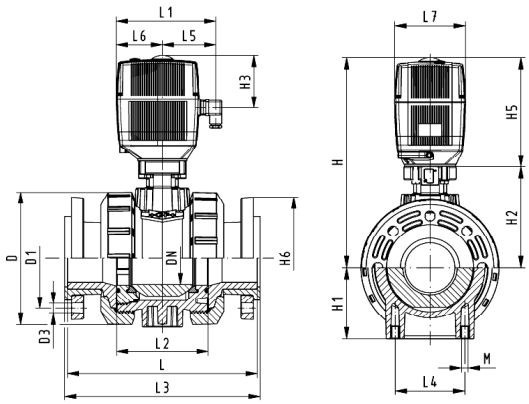


execution: e.g. with backing flange

Code numbers and dimensions please see ball valve type 130 - 134.

# New product:

## Ball valve type 230 - 234 now in DN65 - DN100

**Configuration:**

- Ball valve type 546 DN65 to DN100 in PVC-U, PVC-C, ABS, PP-H
- Flange connection for the actuator according to ISO 5211
- pneumatic actuators PA30-45

**Working principles for pneumatic actuators:**

- fail-safe to close (FC)
- fail-safe to open (FO)
- Double acting (DA)
- Acting angle 90°
- Control time 0.5-2 sec/90°

**Options and accessories:**

- Electrical positioning feedback in the multifunction module
- Namur mounting console to mount the limit switches on top of the actuator
- Solenoid valves for activation of the actuator

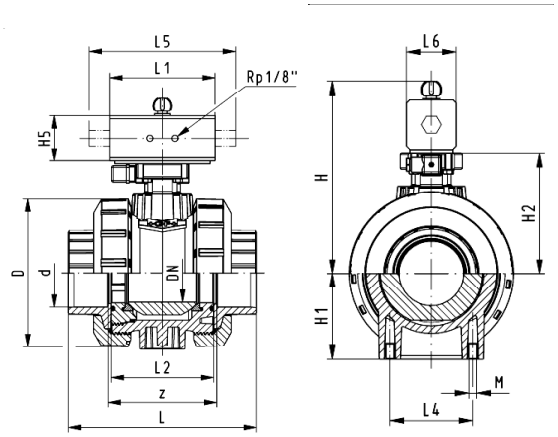


Execution: e.g. cement socket

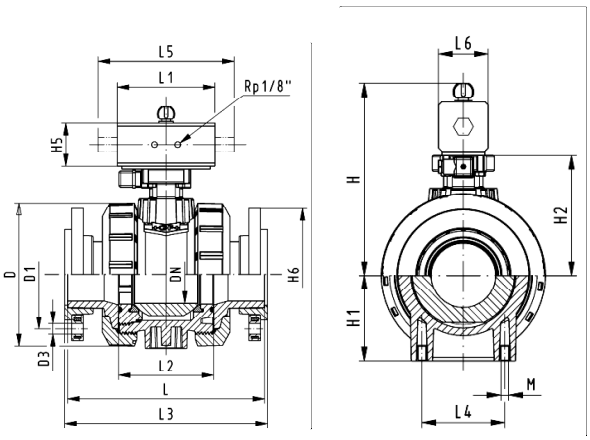


execution: e.g. backing flange

Code numbers and dimensions please see ball valve type 230 - 234

# Dimensions Type 233

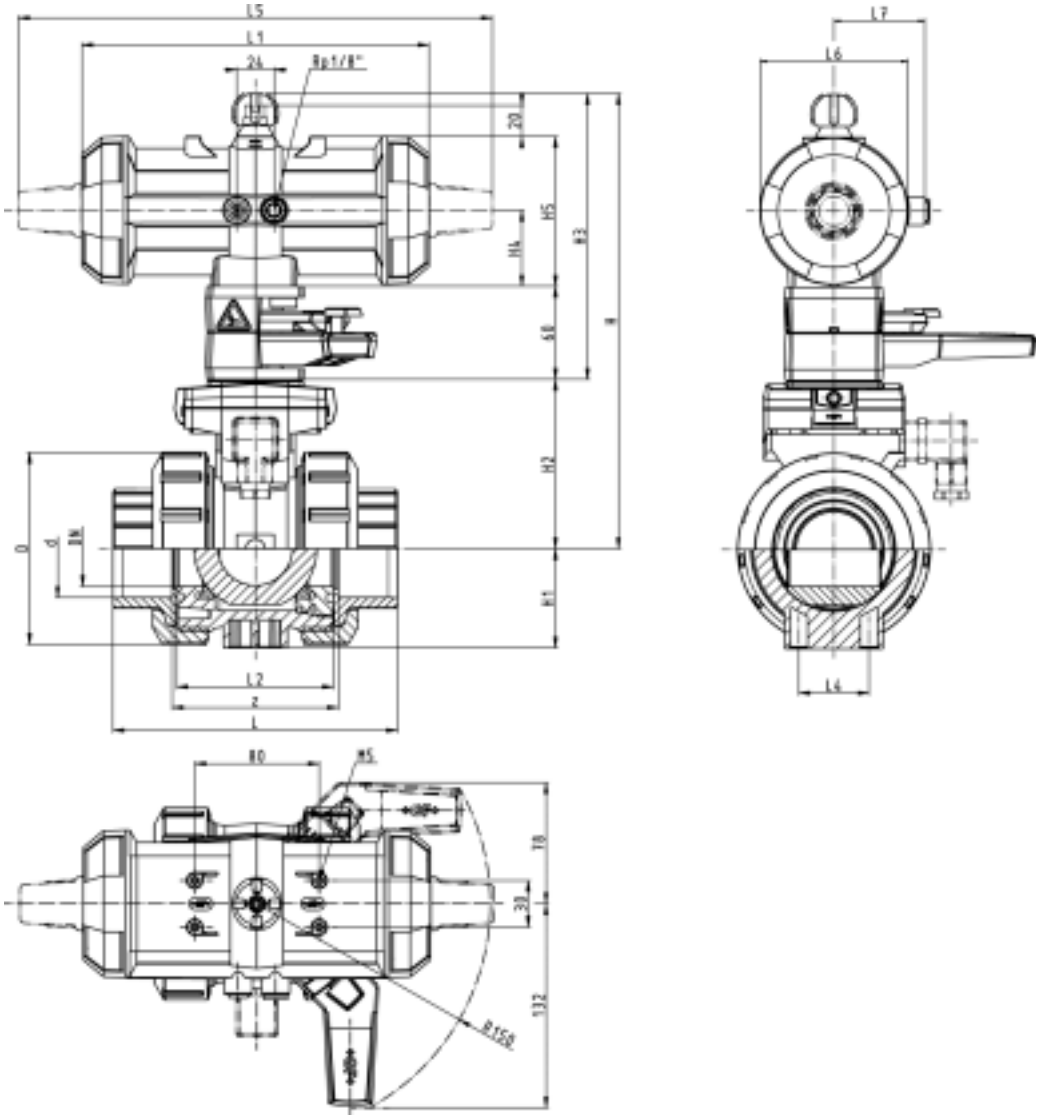


**Ball valve type 546, solvent cement socket, with pneumatic actuator PA11/21 with stroke limiter and manual override**

| Inch | d | DN | D | H | H1 | H2 | H3 | H4 | H5 |
|---|---|---|---|---|---|---|---|---|---|
| 3/8 | 16 | 10 | 1.97 | 9.04 | 1.04 | 2.42 | 6.61 | 1.57 | 3.82 |
| 1/2 | 20 | 15 | 1.97 | 9.04 | 1.04 | 2.42 | 6.61 | 1.57 | 3.82 |
| 3/4 | 25 | 20 | 2.28 | 9.40 | 1.18 | 2.78 | 6.61 | 1.57 | 3.82 |
| 1 | 32 | 25 | 2.68 | 9.40 | 1.40 | 2.78 | 6.61 | 1.57 | 3.82 |
| 1 1/4 | 40 | 32 | 3.31 | 10.65 | 1.73 | 3.29 | 7.36 | 2.01 | 4.53 |
| 1 1/2 | 50 | 40 | 3.82 | 10.65 | 2.0 | 3.29 | 7.36 | 2.01 | 4.53 |
| 2 | 63 | 50 | 4.88 | 11.54 | 2.52 | 4.17 | 7.36 | 2.01 | 4.53 |

| L | L1 | L2 | L4 | L5 | L6 | L7 | z |
|---|---|---|---|---|---|---|---|
| 3.62 | 3.64 | 2.20 | 0.98 | 10.28 | 2.99 | 1.89 | 2.52 |
| 3.74 | 7.65 | 2.20 | 0.98 | 10.28 | 2.99 | 1.89 | 2.52 |
| 4.33 | 7.64 | 2.56 | 0.98 | 10.28 | 2.99 | 1.89 | 2.83 |
| 4.84 | 7.65 | 2.80 | 0.98 | 10.28 | 2.9 | 1.89 | 3.11 |
| 5.75 | 8.82 | 3.25 | 1.77 | 12.01 | 3.74 | 2.32 | 3.70 |
| 6.18 | 8.82 | 3.50 | 1.77 | 12.01 | 3.74 | 2.32 | 3.74 |
| 7.20 | 8.82 | 3.98 | 1.77 | 12.01 | 3.74 | 2.32 | 4.21 |

# Dimensions Type 233

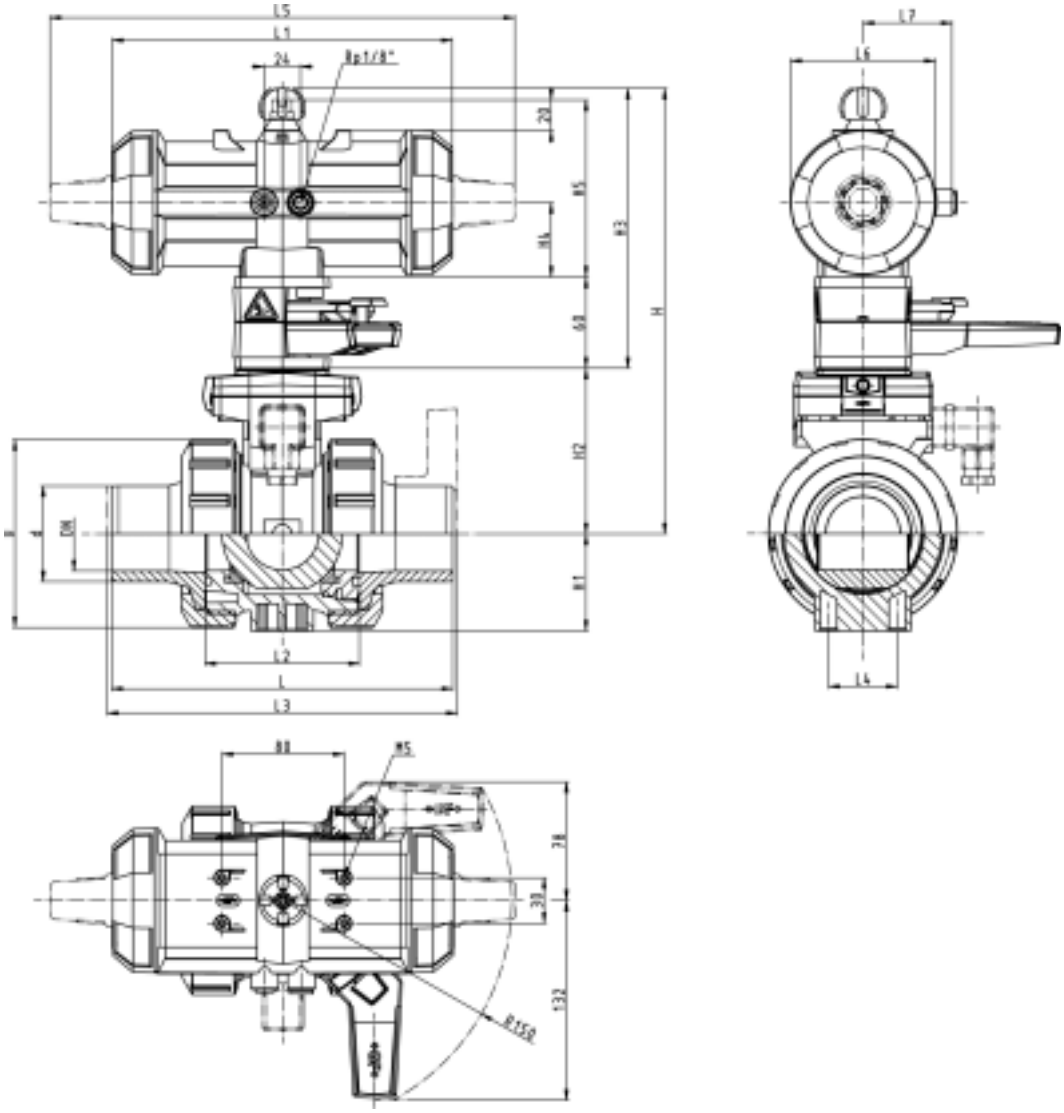


**Ball valve type 546, flanged, with pneumatic actuator PA11/21 with stroke limiter and manual override**

| Inch | d | DN | D | H | H1 | H2 | H3 | H4 | H5 |
|---|---|---|---|---|---|---|---|---|---|
| 3/8 | 16 | 10 | 1.97 | 9.04 | 1.04 | 2.42 | 6.61 | 1.57 | 3.82 |
| 1/2 | 20 | 15 | 1.97 | 9.04 | 1.04 | 2.42 | 6.61 | 1.57 | 3.82 |
| 3/4 | 25 | 20 | 2.28 | 9.40 | 1.18 | 2.78 | 6.61 | 1.57 | 3.82 |
| 1 | 32 | 25 | 2.68 | 9.40 | 1.40 | 2.78 | 6.61 | 1.57 | 3.82 |
| 1 1/4 | 40 | 32 | 3.31 | 10.65 | 1.73 | 3.28 | 7.36 | 2.01 | 4.53 |
| 1 1/2 | 50 | 40 | 3.82 | 10.65 | 2.0 | 3.28 | 7.36 | 2.01 | 4.53 |
| 2 | 63 | 50 | 4.88 | 11.54 | 2.52 | 4.17 | 7.36 | 2.01 | 4.53 |

| L | L1 | L2 | L3 | L4 | L5 | L6 | L7 |
|---|---|---|---|---|---|---|---|
| 4.49 | 7.64 | 2.20 | - | 0.98 | 10.28 | 2.99 | 1.89 |
| 4.88 | 7.64 | 2.20 | 5.12 | 0.98 | 10.28 | 2.99 | 1.89 |
| 5.67 | 7.64 | 2.56 | 5.90 | 0.98 | 10.28 | 2.99 | 1.89 |
| 6.06 | 7.64 | 2.80 | 6.30 | 0.98 | 10.28 | 2.99 | 1.89 |
| 6.85 | 8.82 | 3.35 | 7.09 | 1.77 | 12.01 | 3.74 | 2.32 |
| 7.64 | 8.82 | 3.50 | 7.87 | 1.77 | 12.01 | 3.74 | 2.32 |
| 8.82 | 8.82 | 3.98 | 9.06 | 1.77 | 12.01 | 3.74 | 2.32 |

# Dimensions Type 233

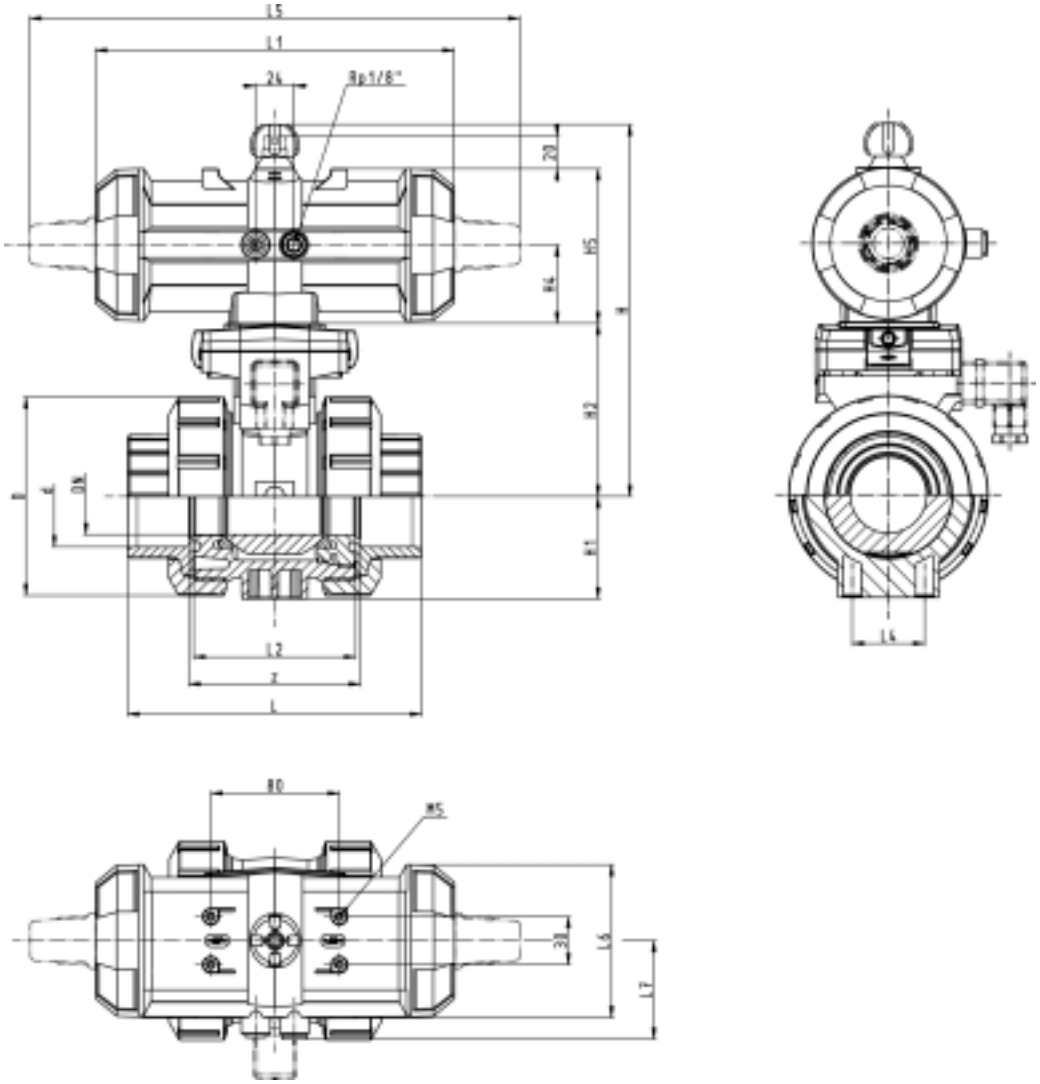


**Ball valve type 546, solvent cement socket, with pneumatic actuator PA11/21 with stroke limiter**

| Inch | d | DN | D | H | H1 | H2 | H4 | H5 |
|---|---|---|---|---|---|---|---|---|
| 3/8 | 16 | 10 | 1.97 | 6.56 | 1.04 | 2.42 | 1.57 | 3.82 |
| 1/2 | 20 | 15 | 1.97 | 6.56 | 1.04 | 2.42 | 1.57 | 3.82 |
| 3/4 | 25 | 20 | 2.28 | 6.91 | 1.18 | 2.78 | 1.57 | 3.82 |
| 1 | 32 | 25 | 2.68 | 6.91 | 1.40 | 2.78 | 1.57 | 3.82 |
| 1 1/4 | 40 | 32 | 3.31 | 8.25 | 1.73 | 3.28 | 2.01 | 4.53 |
| 1 1/2 | 50 | 40 | 3.82 | 8.25 | 2.0 | 3.28 | 2.01 | 4.53 |
| 2 | 63 | 50 | 4.88 | 9.13 | 2.52 | 4.17 | 2.01 | 4.53 |

| L | L1 | L2 | L4 | L5 | L6 | L7 | z |
|---|---|---|---|---|---|---|---|
| 3.62 | 7.64 | 2.20 | 0.98 | 10.28 | 2.99 | 1.89 | 2.52 |
| 3.74 | 7.64 | 2.20 | 0.98 | 10.28 | 2.99 | 1.89 | 2.52 |
| 4.33 | 7.64 | 2.56 | 0.98 | 10.28 | 2.99 | 1.89 | 2.83 |
| 4.84 | 7.64 | 2.80 | 0.98 | 10.28 | 2.99 | 1.89 | 3.11 |
| 5.75 | 8.82 | 3.35 | 1.77 | 12.01 | 3.74 | 2.32 | 3.70 |
| 6.18 | 8.82 | 3.50 | 1.77 | 12.01 | 3.74 | 2.32 | 3.74 |
| 7.20 | 8.82 | 3.98 | 1.77 | 12.01 | 3.74 | 2.32 | 4.21 |

# Dimensions Type 233

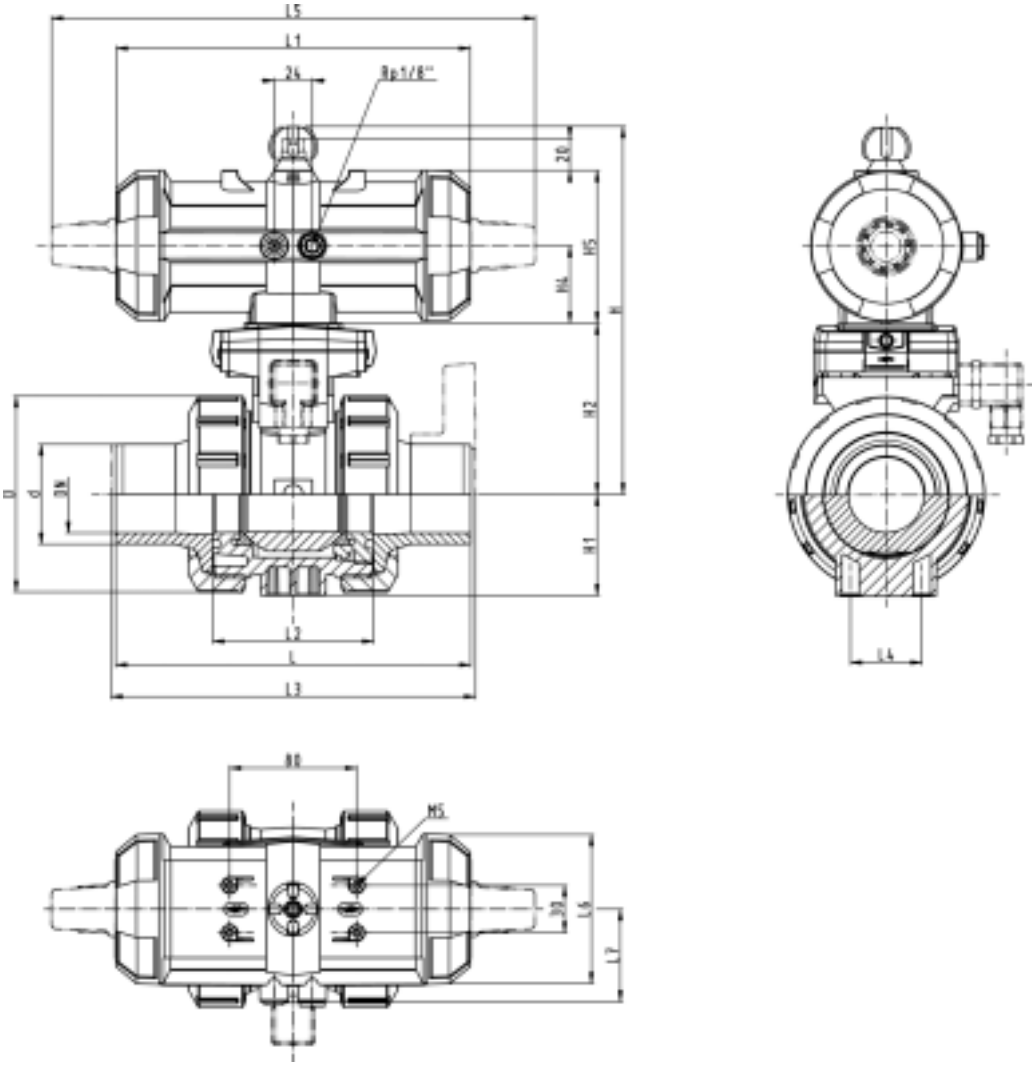


**Ball valve type 546, flanged, with pneumatic actuator PA11/21 with stroke limiter**

| Inch | d | DN | D | H | H1 | H2 | H4 | H5 |
|---|---|---|---|---|---|---|---|---|
| 3/8 | 16 | 10 | 1.97 | 6.56 | 1.04 | 2.42 | 1.57 | 3.82 |
| 1/2 | 20 | 15 | 1.97 | 6.56 | 1.04 | 2.42 | 1.57 | 3.82 |
| 3/4 | 25 | 20 | 2.28 | 6.91 | 1.18 | 2.78 | 1.57 | 3.82 |
| 1 | 32 | 25 | 2.68 | 6.91 | 1.40 | 2.78 | 1.57 | 3.82 |
| 1 1/4 | 40 | 32 | 3.31 | 8.25 | 1.73 | 3.29 | 2.01 | 4.53 |
| 1 1/2 | 50 | 40 | 3.82 | 8.25 | 2.0 | 3.29 | 2.01 | 4.53 |
| 2 | 63 | 50 | 4.88 | 9.13 | 2.52 | 4.17 | 2.01 | 4.53 |

| L | L1 | L2 | L3 | L4 | L5 | L6 | L7 |
|---|---|---|---|---|---|---|---|
| 4.48 | 7.64 | 2.20 | - | 0.98 | 10.28 | 2.99 | 1.89 |
| 4.88 | 7.64 | 2.20 | 5.12 | 0.98 | 10.28 | 2.99 | 1.89 |
| 5.67 | 7.64 | 2.56 | 5.90 | 0.98 | 10.28 | 2.99 | 1.89 |
| 6.06 | 7.64 | 2.80 | 6.30 | 0.98 | 10.28 | 2.99 | 1.89 |
| 6.85 | 8.82 | 3.35 | 7.09 | 1.77 | 12.01 | 3.74 | 2.32 |
| 7.64 | 8.82 | 3.50 | 7.87 | 1.77 | 12.01 | 3.74 | 2.32 |
| 8.82 | 8.82 | 3.98 | 9.06 | 1.77 | 12.01 | 3.74 | 2.32 |

GEORG FISCHER
PIPING SYSTEMS

2 1/2" to 4"

## 2 1/2 to 4" Ball valve type 233 PVC

**With solvent cement sockets Inch ANSI**
**Without manual override**
**With pneumatic actuator (FC, FO, DA)**
**Integrated stainless steel mounting inserts**
**Control time 90° <) 1-2 s**

**Model: FC (fail safe to close)**

| Inch | DN (mm) | PN | EPDM Code | FPM Code | Actuator type PA |
|---|---|---|---|---|---|
| 2 1/2 | 65 | 10 | **199 233 069** | **199 233 079** | 30 |
| 3 | 80 | 10 | **199 233 070** | **199 233 080** | 35 |
| 4 | 100 | 10 | **199 233 071** | **199 233 081** | 40 |

| Inch | D (mm) | H (mm) | H1 (mm) | H2 (mm) | H4 (mm) | H5 (mm) | L (mm) | L1 (mm) | L2 (mm) | L4 (mm) | L5 (mm) | L6 (mm) | L7 (mm) | Z (mm) |
|---|---|---|---|---|---|---|---|---|---|---|---|---|---|---|
| 2 1/2 | 166 | 262 | 85 | 156 | | 70 | 233 | 218 | 136 | 70 | 276 | 65 | | 144 |
| 3 | 200 | 281 | 105 | 168 | | 78 | 254 | 259 | 141 | 70 | 341 | 72 | | 151 |
| 4 | 238 | 292 | 123 | 175 | | 86 | 301 | 287 | 164 | 120 | 369 | 80 | | 174 |

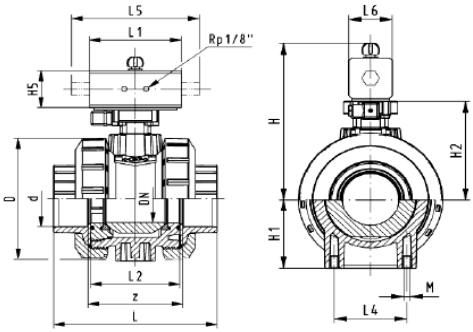


**Model: FO (fail safe open)**

| Inch | DN (mm) | PN | EPDM Code | FPM Code | Actuator type PA |
|---|---|---|---|---|---|
| 2 1/2 | 65 | 10 | **199 233 089** | **199 233 099** | 30 |
| 3 | 80 | 10 | **199 233 090** | **199 233 100** | 35 |
| 4 | 100 | 10 | **199 233 091** | **199 233 101** | 40 |

| Inch | D (mm) | H (mm) | H1 (mm) | H2 (mm) | H4 (mm) | H5 (mm) | L (mm) | L1 (mm) | L2 (mm) | L4 (mm) | L5 (mm) | L6 (mm) | L7 (mm) | Z (mm) |
|---|---|---|---|---|---|---|---|---|---|---|---|---|---|---|
| 2 1/2 | 166 | 262 | 85 | 156 | | 70 | 233 | 218 | 136 | 70 | 276 | 65 | | 144 |
| 3 | 200 | 281 | 105 | 168 | | 78 | 254 | 259 | 141 | 70 | 341 | 72 | | 151 |
| 4 | 238 | 292 | 123 | 175 | | 86 | 301 | 287 | 164 | 120 | 369 | 80 | | 174 |

**Model: DA (double acting)**

| Inch | DN (mm) | PN | EPDM Code | FPM Code | Actuator type PA |
|---|---|---|---|---|---|
| 2 1/2 | 65 | 10 | **199 233 109** | **199 233 119** | 35 |
| 3 | 80 | 10 | **199 233 110** | **199 233 120** | 40 |
| 4 | 100 | 10 | **199 233 111** | **199 233 121** | 45 |

| Inch | D (mm) | H (mm) | H1 (mm) | H2 (mm) | H4 (mm) | H5 (mm) | L (mm) | L1 (mm) | L2 (mm) | L4 (mm) | L5 (mm) | L6 (mm) | L7 (mm) | Z (mm) |
|---|---|---|---|---|---|---|---|---|---|---|---|---|---|---|
| 2 1/2 | 166 | 262 | 85 | 156 | | 66 | 233 | 144 | 136 | 70 | 190 | 60 | | 144 |
| 3 | 200 | 281 | 105 | 168 | | 70 | 254 | 152 | 141 | 70 | 198 | 65 | | 151 |
| 4 | 238 | 292 | 123 | 175 | | 78 | 301 | 169 | 164 | 120 | 235 | 72 | | 174 |

# Technical Data of Ball Valves

## Pressure-temperature diagram

### For PVC ball valve type 546

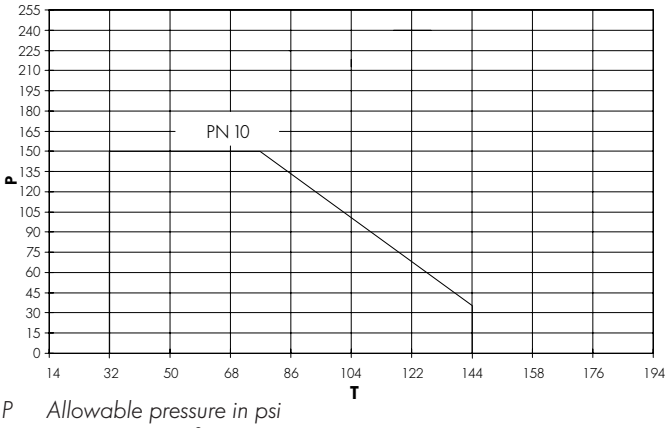


*P Allowable pressure in psi*
*T Temperature in °F*

### For CPVC ball valve type 546

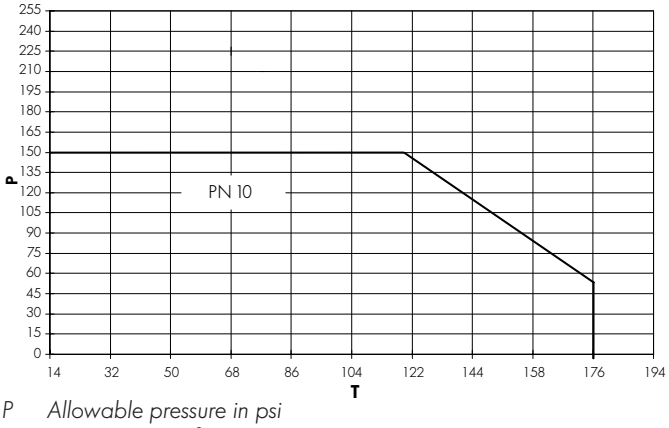


*P Allowable pressure in psi*
*T Temperature in °F*

### Pressure loss for ball valve type 546

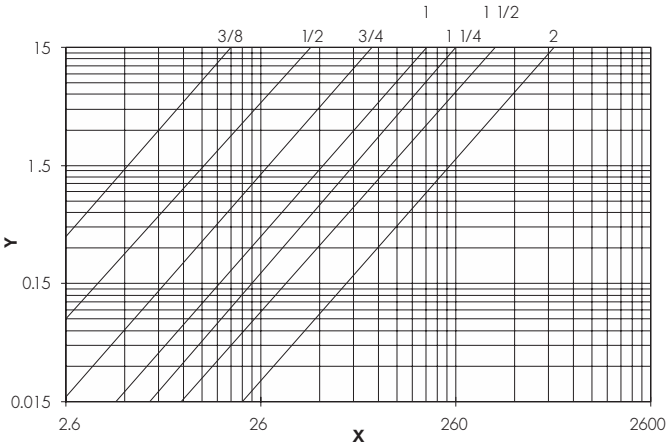


*Medium: water, 68°F*
*X Flow volume (gpm)*
*Y Pressure loss $\Delta p$ (psi)*

### Flow characteristics for ball valve type 546

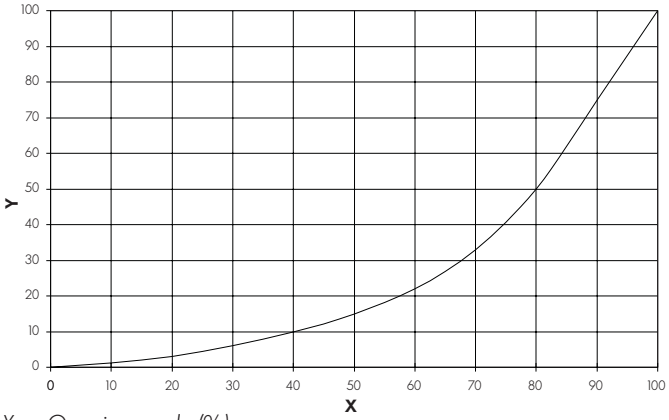


*X Opening angle (%)*
*Y $C_V$-value (%)*

### Torque for ball valve type 546 (reference values)

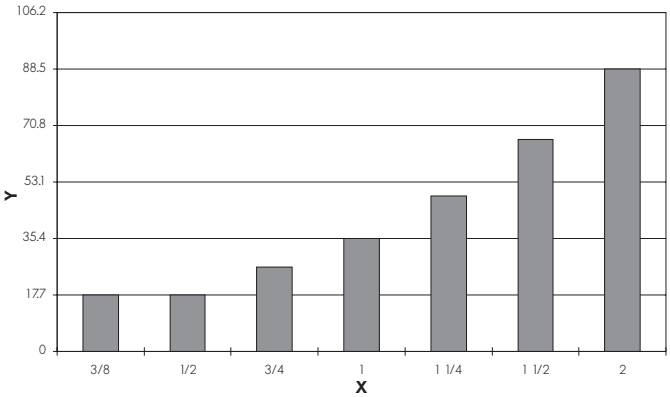


*X Nominal diameter (inch)*
*Y Torque (in-lbf)*

# Fundamentals for Ball Valves, hand operated

## Ball Valve Type 546

## Pressure-Temperature Diagram Ball Valve in PP-H (service life 25 years, medium water or similar media)

For applications with temperatures in the range of the dotted lines, please contact your George Fischer representative.

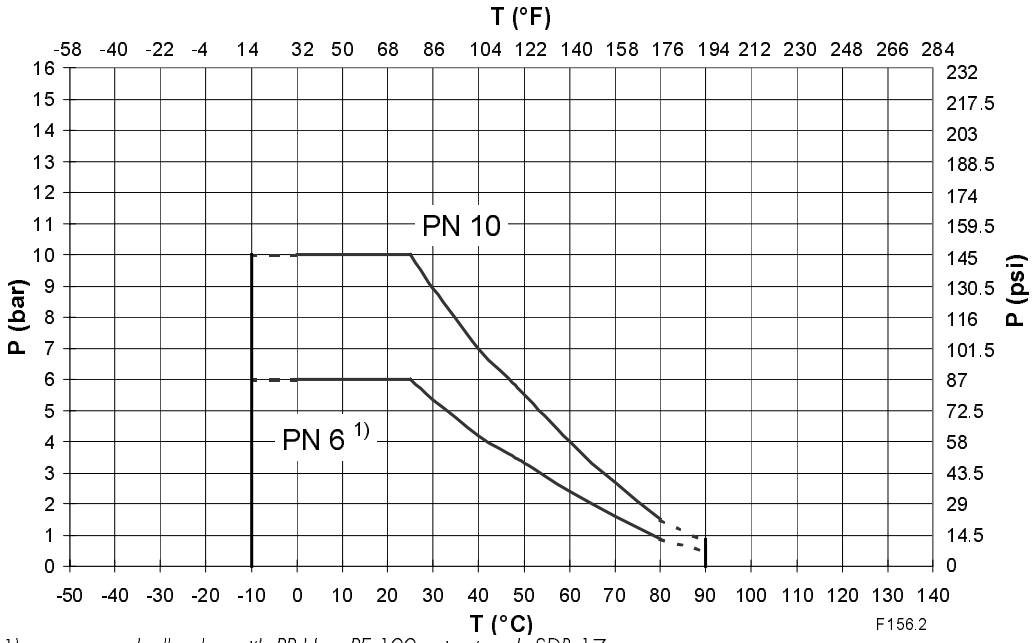


*1) e.g. ball valve with PP-H or PE 100 spigot end SDR 17*
*T Temperature in °C / °F*
*p permissible pressure in bar / psi*

# Pressure-Temperature Diagram Ball Valve Type 546 in PVDF (service life 25 years, medium water or similar media)

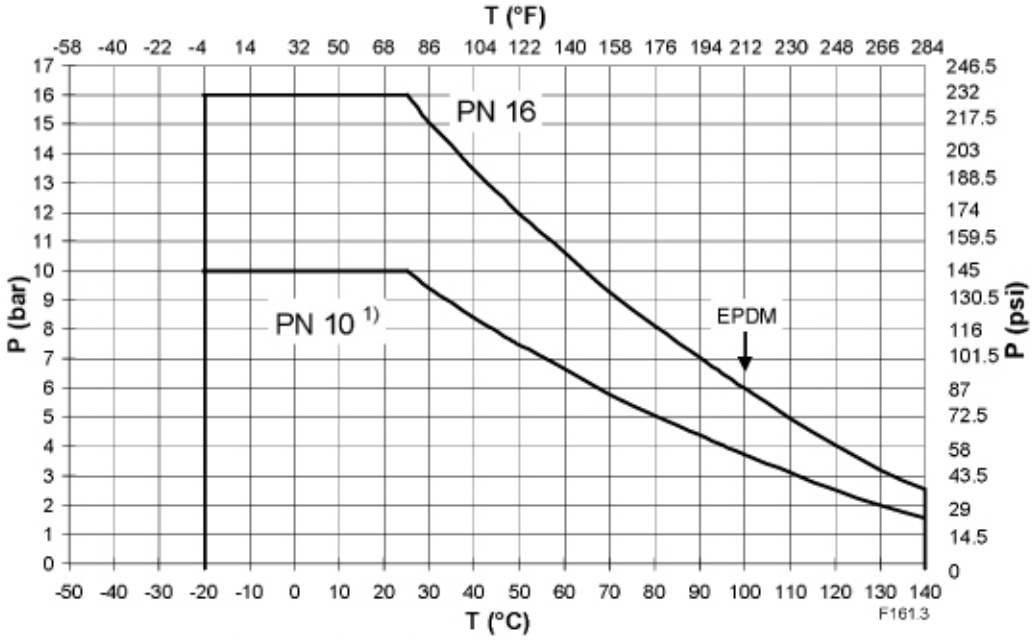


| | |
|---|---|
| *1)* | *e.g. ball valve with threaded sockets* |
| *EPDM* | *EPDM-seal max. 100°C* |
| *T* | *Temperature in °C / °F* |
| *p* | *permissible pressure in bar / psi* |

# Operating Torque for Ball Valve Type 546 (Average Values)

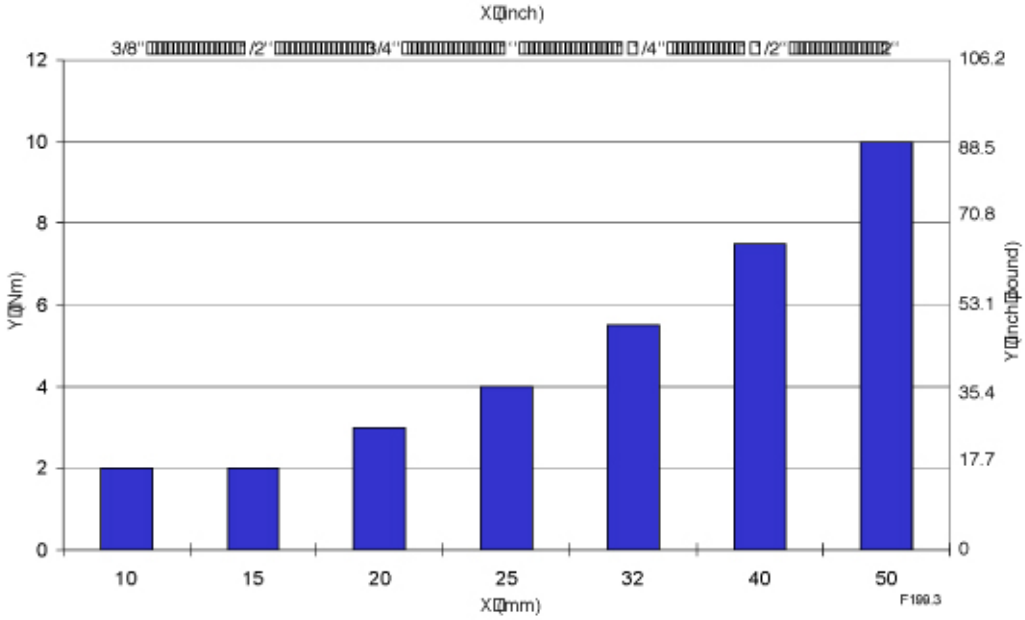


*X* *Size DN (mm / inch)*
*Y* *Torque (Nm / inch pound)*

Depending on the application (e.g. operating speed, fluid, temperature, etc.). about 2 times the operating torque should be taken for sizing actuators.

# Pressure Loss for Ball Valve Type 546

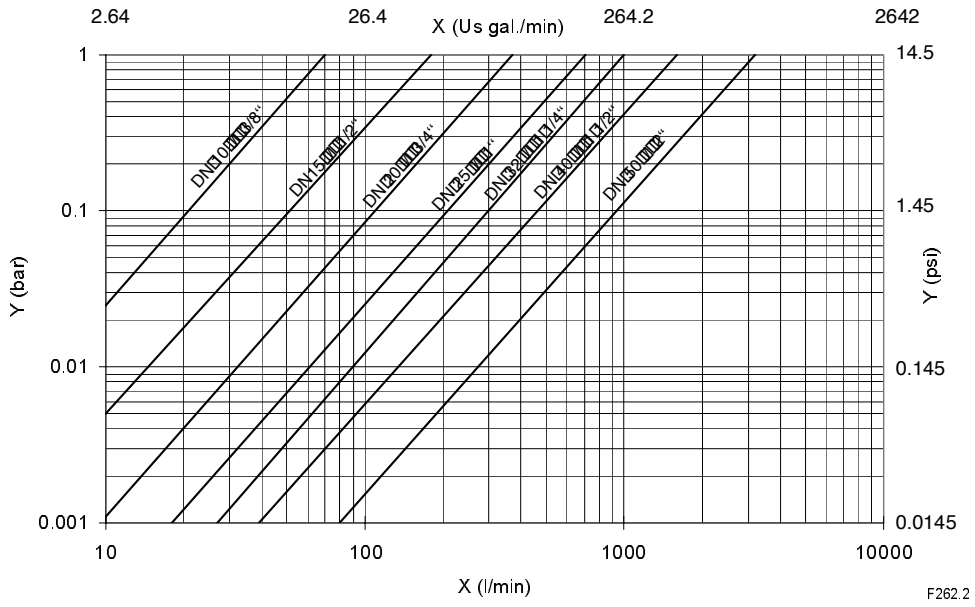


*Medium: water, 20 °C*

*X* *Flow rate (l/min), (US gal./min)*

*Y* *Pressure loss Δp (bar), (psi)*

# Flow Characteristics for Ball Valve Type 546

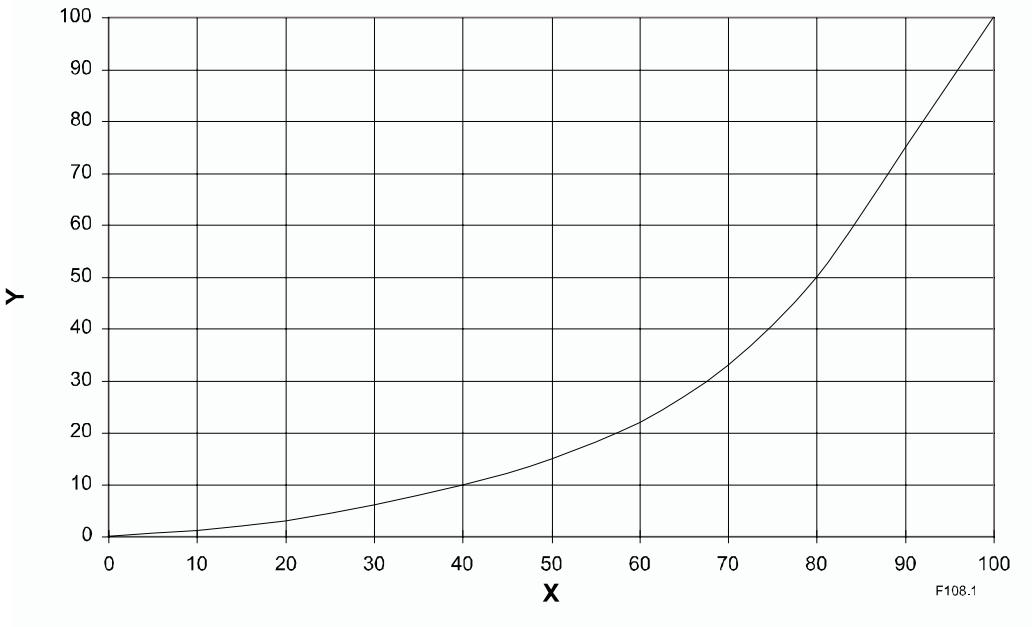


*X* *Open angle (%)*

*Y* *Flow factor kv, cv (%)*

# kv 100 Values for Ball Valve Type 546

The $k_v$ values for each intermediate valve position can be determined using the flow value characteristic and the $k_v$ 100 values.

| DN mm | DN inch | d mm | $k_v$ 100 l/min (Δp = 1 bar) | $C_v$ 100 US gal. / min (Δp = 1 psi) | $k_v$ 100 $m^3/h$ (Δp = 1 bar) |
|---|---|---|---|---|---|
| 10 | 3/8 | 16 | 70 | 4.9 | 4.2 |
| 15 | 1/2 | 20 | 185 | 12.9 | 11.1 |
| 20 | 3/4 | 25 | 350 | 24.5 | 21 |
| 25 | 1 | 32 | 700 | 49.0 | 42 |
| 32 | 1¼ | 40 | 1000 | 70.0 | 60 |
| 40 | 1½ | 50 | 1600 | 112.0 | 96 |
| 50 | 2 | 63 | 3100 | 217.1 | 186 |

# Tightening torque values for bolts type 546

Flanged joints with flange gaskets or flat gaskets

| d mm | DN mm | DN Zoll | Total number of screws (for 2 flanged joints) standard nut (height 0.8 x d) 1) | Torque (average values) Flange gasket 2) | | Torque (average values) Flat gasket | |
|---|---|---|---|---|---|---|---|
| | | | | in Nm | in In lbf | in Nm | in In lbf |
| 20 | 15 | ½ | 8 x M12 x 50 | 15 | 133 | 15 | 133 |
| 25 | 20 | ¾ | 8 x M12 x 55 | 15 | 133 | 15 | 133 |
| 32 | 25 | 1 | 8 x M12 x 60 | 15 | 133 | 15 | 133 |
| 40 | 32 | 1¼ | 8 x M16 x 70 | 15 | 133 | 20 | 177 |
| 50 | 40 | 1½ | 8 x M16 x 70 | 15 | 133 | 30 | 266 |
| 63 | 50 | 2 | 8 x M16 x 80 | 20 | 177 | 35 | 310 |

1) for valve ends Type 546 in PP-H in combination with backing flanges, use half of the standard nut height
2) preferred (plastics-oriented) gasket type

**Attention:** For more information on the use of the different gasket types, see Chapter: Jointing Technology => Separable Connections

# Technical Features of the Ball Valve Type 546

**a**) Valve ends parts for the Type 546 are available as:

- Solvent cement/fusion socket (short installation length)
- Solvent cement/fusion spigot (for standard installation length)
- Threaded socket (on request with stainless steel outer reinforcement ring)
- Butt fusion spigot
- electrofusion spigot
- Fixed flange (for standard installation length)
- Backing flange (for standard installation length)
- Solvent cement and threaded connections for other standards.

**b**) Newly designed valve nuts with buttress thread. These enable fast and safe radial mounting and dismounting of the valve during installation or maintenance work, without tools.
**Attention**: Only hand tighten valve nuts.

**c**) Union bush with fine buttress thread makes it easier to adjust the operating torque. **Attention:** Please observe the operating torque guidelines!

**d**) Ball with fully circular cross-section for optimal flow characteristics. The system with the floating ball permits a tight seal.

**e**) Two spigot seals with o-rings guarantee a long service life and high reliability.

**f**) The stem features a predetermined breaking point, which is located outside of the housing. In case of damage, the medium cannot therefore leak to the outside along the spigot.

**g**) Sturdy ball seals made of pure PTFE demonstrate high abrasion resistance, good sliding properties, chemical resistance (see the special list of "Chemical Resistance") and a long working life.

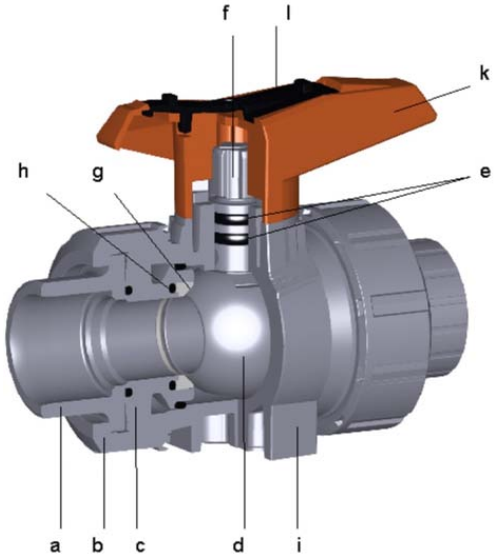


**h**) The backing seal effectuates continuous readjustment of the ball seal and this means that under normal working conditions maintenance-free operation and a constant torque can be warranted.

The special geometry of the o-ring chamber prevents the o-rings from being flushed out.

**i**) Compact housing, designed especially for plastics, with short installation length. The basic model has pick-up points for threaded inserts so that they can be attached directly on the valve. A multifunctional module with limit switches, which simultaneously serves as an interface for adding actuators, can be mounted quickly and simply on the valve body.

**k**) Ergonomic polypropylene handle with double stops and coding for clear positioning on the stem. Multifunctional handle, lockable and with grid positioning at 0° and 90°, available as an option.

**l**) Integrated handle clip of reinforced polypropylene with two cams, enabling the handle to be used as a tool for assembly and disassembly of the union bush (Attention: The union bush has left-handed thread)

# Product Specification

## Pneumatic Actuator PA 11/21

Pneumatic actuators shall have housings made from glass filled polypropylene and any exposed metallic components such as fasteners shall be of stainless steel. Circuit functions available shall include air to air (double acting) and air to spring (fail open/closed). Visual position indication shall be standard. Accessories available shall include limit switches (rated 10 amps @ 250 volts), 1000 ohm potentiometer and adjustable stroke limiter on air to spring units. The actuator shall be of the rack and pinion design with pre-loaded spring sets for increased safety on air-to-spring units. Actuator shall be rated for 105 psi plant air. As supplied by George Fischer, Inc., Tustin, CA 92780.

## Type 231-233 Pneumatic Actuated Ball Valve

Available in 3/8" - 2" sizes in PVC, CPVC, B-PP, and PVDF valve body materials with EPDM or FPM seals. The actuator housing is glass-filled polypropylene, (NEMA 4X or IP 65 corrosion resistance). Available with optional declutching manual override, extra limit switches, and 1000 ohm potentiometer for position feedback. Functions shall include Air to Spring (Fail Open or Fail Close) or Air to Air (Double Acting). As supplied by George Fischer Inc., Tustin, CA 92780.

**FPM seals are made of Viton® or equal materials.*
*Viton® is a registered trademark of DuPont Dow Elastomers.*

# Technical Data of Actuator

## Actuator

| | |
|---|---|
| Control medium | Neutral, non-aggressive gases<br>(Control with fluids on request) |
| Temperature control medium | max. 104°F |
| Control pressures (reference values) | |

### PA 11 Torque characteristics

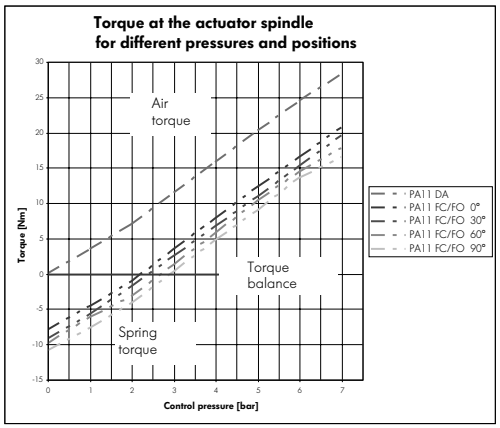


### PA 21 Torque characteristics

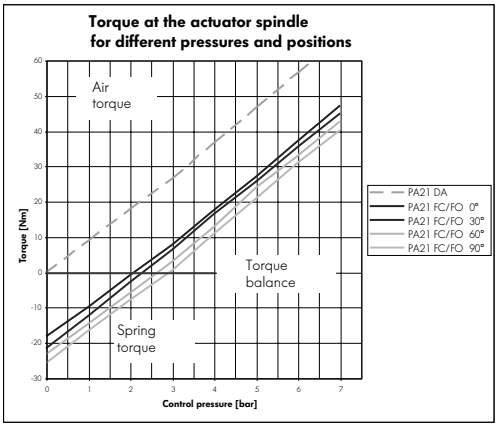


| Control volume | inch size | Single acting (FC/FO) $in^3$ | Double acting (DA) $in^3$ | |
|---|---|---|---|---|
| | | | 1) | 2) |
| PA11 | $^3/_8$ – 1 | 9.15 | 10.18 | 9.15 |
| PA21 | $1^1/_4$ – 2 | 17.08 | 21.35 | 17.08 |

1) open
2) closed

| | |
|---|---|
| Control connection | G $^1/_8$" |
| Control time for 90° ∢ | 1–2 s, with throttle valve up to 5 s |
| Actuating angle | 90° ∢ |
| Mode of operation | – fail safe to close (FC)<br>– fail safe to open (FO)<br>– double acting (DA) |
| Allowable ambient temperature | 14° to +122°F |
| Allowable humidity | 0–100% |
| Max. allowable control pressure | 101.5 psi |
| Position indicator | optical |
| Housing materials | PP fiberglass-reinforced |

# Solenoid Pilot Valves
## Type PV94/PV95

The PV94/PV95 solenoid pilot valves have been designed especially for GF Piping Systems single-acting pneumatic actuators. They are installed with a banjo bolt directly to the air connection of the actuator.
Depending on the control air volume, you can choose either the PV94 with 1.2 mm nominal diameter or the PV 95 with 1.5 mm or 2 mm nominal diameter. For the air connection, G 1/8", G 1/4" or 6 mm push-in connectors are available.

All valves are naturally also available in 24 V=, 24V 50Hz, 110V 60Hz and 230V 50Hz versions.

### Measurements:

**Type PV94**
with push-in connector

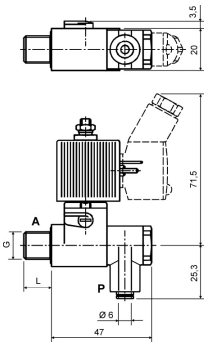


**Type PV94**
with G 1/8" or G1/4" union

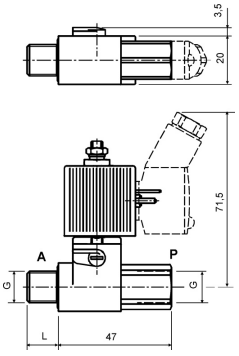


**Type PV95**

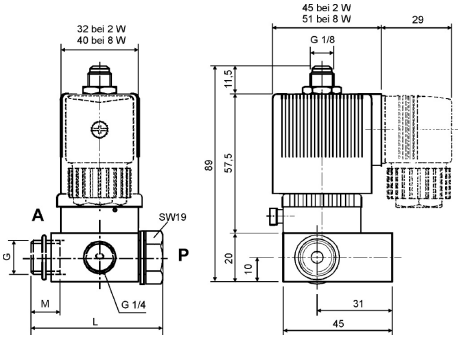


### Mode of operation:

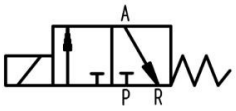


**C =** normally closed,
when de-energized, output A is vented

## → Our strengths

- compact design
- easy installation
- always the right size for your air connection
- low power consumption
- turnable coil
- any mounting position



+GF+

## Technical Data

| | PV94 DN1.2 | PV95 DN1.5 | PV95 DN2 |
|---|---|---|---|
| Housing material | Polyamide | Polyamide (flange housing)<br>Aluminum anodized<br>(Connector housing) | Brass (flange housing)<br>Aluminum anodized<br>(Connector housing) |
| Banjo bolt | Nickel-plated brass | Brass | Brass |
| Sealing material | NBR | FPM | FPM |
| Media | inert gases and fluids | | |
| Medium temperature | -10...100°C | | |
| Ambient temperature | -10...55°C | | |
| Viscosity | max. 21 mm $^2$/s | | |
| Pipe connection | G 1/8", G 1/4", push-in connector 6 mm | G 1/8", G 1/4" | G 1/8", G 1/4" |
| Operating voltage | 24 V DC<br>24 V/50 Hz<br>110 V/50 Hz<br>230 V/50 Hz | | |
| Voltage tolerance | +/- 10% | | |
| Rated duty | Continuous duty 100% ED | | |
| Electrical connections | per DIN EN 175301-803*<br>Form C | per DIN 43650<br>Form A | per DIN 43650<br>Form A |
| Manual override | standard | | |
| Mounting position | user-defined, preferably actuator on top | | |
| Weight | 135 g | 420 g | 420 g |
| Protection rating | IP 65 with socket connector | | |
| Nominal diameter [mm] | DN 1.2 | DN 1.5 | DN 2 |
| QNn value air [l/min]* | 48 | 75 | 120 |
| Pressure range [bar]** | 0 – 10 | 0 – 6 | 0 – 10 |
| Coil output [W] | 4W (AC, DC) | 2 W (AC, DC) | 8 W (AC, DC) |
| Electrical power startup | 9 VA (AC), 4W (DC) | 11 VA (AC), 2W (DC) | 24 VA (AC), 8W (DC) |
| Electrical power operation | 6 VA (AC), 4W (DC) | 6 VA (AC), 2W (DC) | 17 VA (AC), 8W (DC) |
| Response time open [ms]*** | 7 – 12 | 25 | 18 |
| Response time close [ms]*** | 7 – 12 | 35 | 22 |

* QNn value for air [l/min] at +20°C, 6 bar valve inlet, pressure difference 1 bar
** Pressure data [bar] gauge pressure
*** Response time [ms] Measured at the valve outlet at 6 bar and +20°C open: pressure buildup 0...90%, close: pressure release 100...0%

# +GF+ Type 546 Ball Valve Configurator

The part number for any combination of ball valve consists of separate match codes that designate the body material, size, seal material, end connections, mounting style and other options. Please refer to the table on this page for the available codes and a sample configuration. **Please note: not all configurations are available. Contact customer service to confirm availability.**

Sample configuration:

**A**01 **B**01 **C**08 **D**01 **E**02 **F**01 **G**03 **G**71 **I**03 **L**01 **T**04 **W**02 **W**14

**This sample configuration corresponds to the following order:** Type 546 PVC ball valve with 1" nominal width, standard PTFE seat, FPM seals, without threaded insert, with PVC solvent cement socket ASTM and PVC backing flange (ANSI) connections, 2 limit switches NiAg, no mounting plate, and the EA21 electric actuator, with heating element and fail-safe return unit.

## A Ball Valve

01 Type 546

## B Material

01 PVC
02 CPVC

## C Nominal width

05 3/8" DN 10
06 1/2" DN 15
07 3/4" DN 20
08 1" DN 25
09 1 1/4" DN 32
10 1 1/2" DN 40
11 2" DN 50

## D Version

01 standard, PTFE seat
02 oil-free, PTFE seat
03 silicone-free, PTFE seat
04 silicone-free, PVDF seat

## E Seals

01 EPDM seals
02 FPM seals

## F Threaded Insert

01 without threaded insert
02 with threaded insert

## G End Connections

**US**

03 PVC solvent cement socket, ASTM
09 PVC threaded socket, NPT
71 PVC backing flange, ANSI
13 CPVC solvent cement socket, ASTM
17 CPVC threaded socket, NPT
34 PP threaded socket, NPT reinforced

**Metric**

30 PP fusion socket, metric
32 PP socket fusion spigot, metric
33 PP threaded socket, Rp
72 PP-steel backing flange, metric
35 PP butt fusion spigot, SDR 11 metric IR-PLUS
36 PP butt fusion spigot, SDR 17.6 metric
37 PP butt fusion spigot long, SDR 11 metric
01 PVC solvent cement socket, metric
05 PVC solvent cement spigot, metric
06 PVC threaded socket, Rp
07 PVC threaded socket, Rp reinforced
08 PVC threaded socket, Rc
60 PVC serrated fixed flange, metric
61 PVC flat fixed flange, metric
70 PVC backing flange, metric
11 CPVC solvent cement socket, metric
14 CPVC solvent cement spigot, metric
15 CPVC threaded socket, Rp
16 CPVC threaded socket, Rp reinforced

## I Multifunction module

01 no multi-function module
02 empty module
03 with 2 limit switches NiAg
04 with 2 limit switches Au
05 with 2 inductive switches Namur
06 with 2 inductive switches PNP
07 with 2 inductive switches NPN

## K Handle

01 standard handle, red
02 standard handle, black
11 multi-function handle, red

## L Mounting plate

01 without mounting plate
02 with mounting plate

## P Pneumatic actuators PA11/PA21

01 Fail safe to close PA11/PA21
02 Fail safe to open PA11/PA21
03 Double-acting PA11/PA21

## Q Manual override

01 without manual override
02 with manual override

## T Electric actuators EA11/EA21

01 EA11 24V
02 EA11 100–230V
03 EA21 24V
04 EA21 100–230V

## U Accessories for EA11

01 no accessories
02 2 limit switch Ag, Ni
03 Heating element
04 Fail-safe return

## W Accessories for EA21

01 no accessories
02 Heating element
03 Cycle time module
04 Cycle time monitoring
05 Cycles monitoring
06 Motor current monitoring
07 2 limit switches Ag, Ni
08 2 limit switches Gold
09 2 limit switches NPN
10 2 limit switches PNP
11 Positioner
12 Electric position indicator
13 Bus module
14 Fail-safe return unit

# Solenoid Pilot Valves
## Type PV94/PV95

The PV94/PV95 solenoid pilot valves have been designed especially for GF Piping Systems single-acting pneumatic actuators. They are installed with a banjo bolt directly to the air connection of the actuator.
Depending on the control air volume, you can choose either the PV94 with 1.2 mm nominal diameter or the PV 95 with 1.5 mm or 2 mm nominal diameter. For the air connection, G 1/8", G 1/4" or 6 mm push-in connectors are available.

All valves are naturally also available in 24 V=, 24V 50Hz, 110V 60Hz and 230V 50Hz versions.

### Measurements:

**Type PV94**
with push-in connector

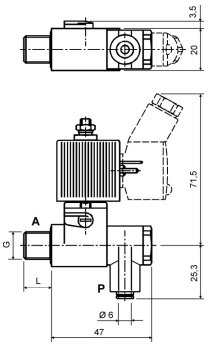


**Type PV94**
with G 1/8" or G1/4" union

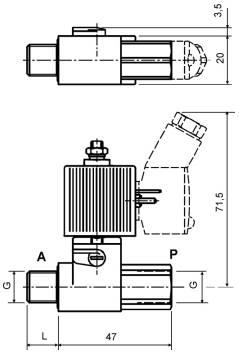


**Type PV95**

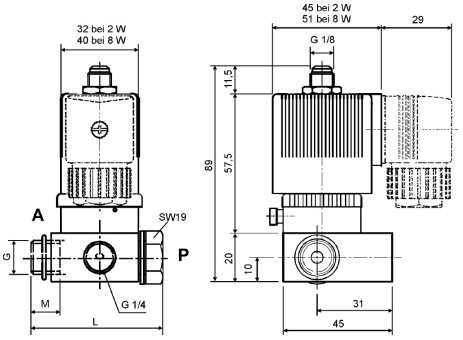


### Mode of operation:

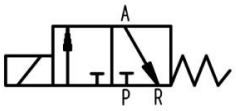


**C =** normally closed,
when de-energized, output A is vented

## → Our strengths

- compact design
- easy installation
- always the right size for your air connection
- low power consumption
- turnable coil
- any mounting position



+GF+

## Technical Data

| | PV94 DN1.2 | PV95 DN1.5 | PV95 DN2 |
|---|---|---|---|
| Housing material | Polyamide | Polyamide (flange housing)<br>Aluminum anodized<br>(Connector housing) | Brass (flange housing)<br>Aluminum anodized<br>(Connector housing) |
| Banjo bolt | Nickel-plated brass | Brass | Brass |
| Sealing material | NBR | FPM | FPM |
| Media | inert gases and fluids | | |
| Medium temperature | -10...100°C | | |
| Ambient temperature | -10...55°C | | |
| Viscosity | max. 21 mm $^2$/s | | |
| Pipe connection | G 1/8", G 1/4", push-in connector 6 mm | G 1/8", G 1/4" | G 1/8", G 1/4" |
| Operating voltage | 24 V DC<br>24 V/50 Hz<br>110 V/50 Hz<br>230 V/50 Hz | | |
| Voltage tolerance | +/- 10% | | |
| Rated duty | Continuous duty 100% ED | | |
| Electrical connections | per DIN EN 175301-803*<br>Form C | per DIN 43650<br>Form A | per DIN 43650<br>Form A |
| Manual override | standard | | |
| Mounting position | user-defined, preferably actuator on top | | |
| Weight | 135 g | 420 g | 420 g |
| Protection rating | IP 65 with socket connector | | |
| Nominal diameter [mm] | DN 1.2 | DN 1.5 | DN 2 |
| QNn value air [l/min]* | 48 | 75 | 120 |
| Pressure range [bar]** | 0 – 10 | 0 – 6 | 0 – 10 |
| Coil output [W] | 4W (AC, DC) | 2 W (AC, DC) | 8 W (AC, DC) |
| Electrical power startup | 9 VA (AC), 4W (DC) | 11 VA (AC), 2W (DC) | 24 VA (AC), 8W (DC) |
| Electrical power operation | 6 VA (AC), 4W (DC) | 6 VA (AC), 2W (DC) | 17 VA (AC), 8W (DC) |
| Response time open [ms]*** | 7 – 12 | 25 | 18 |
| Response time close [ms]*** | 7 – 12 | 35 | 22 |

* QNn value for air [l/min] at +20°C, 6 bar valve inlet, pressure difference 1 bar
** Pressure data [bar] gauge pressure
*** Response time [ms] Measured at the valve outlet at 6 bar and +20°C open: pressure buildup 0...90%, close: pressure release 100...0%

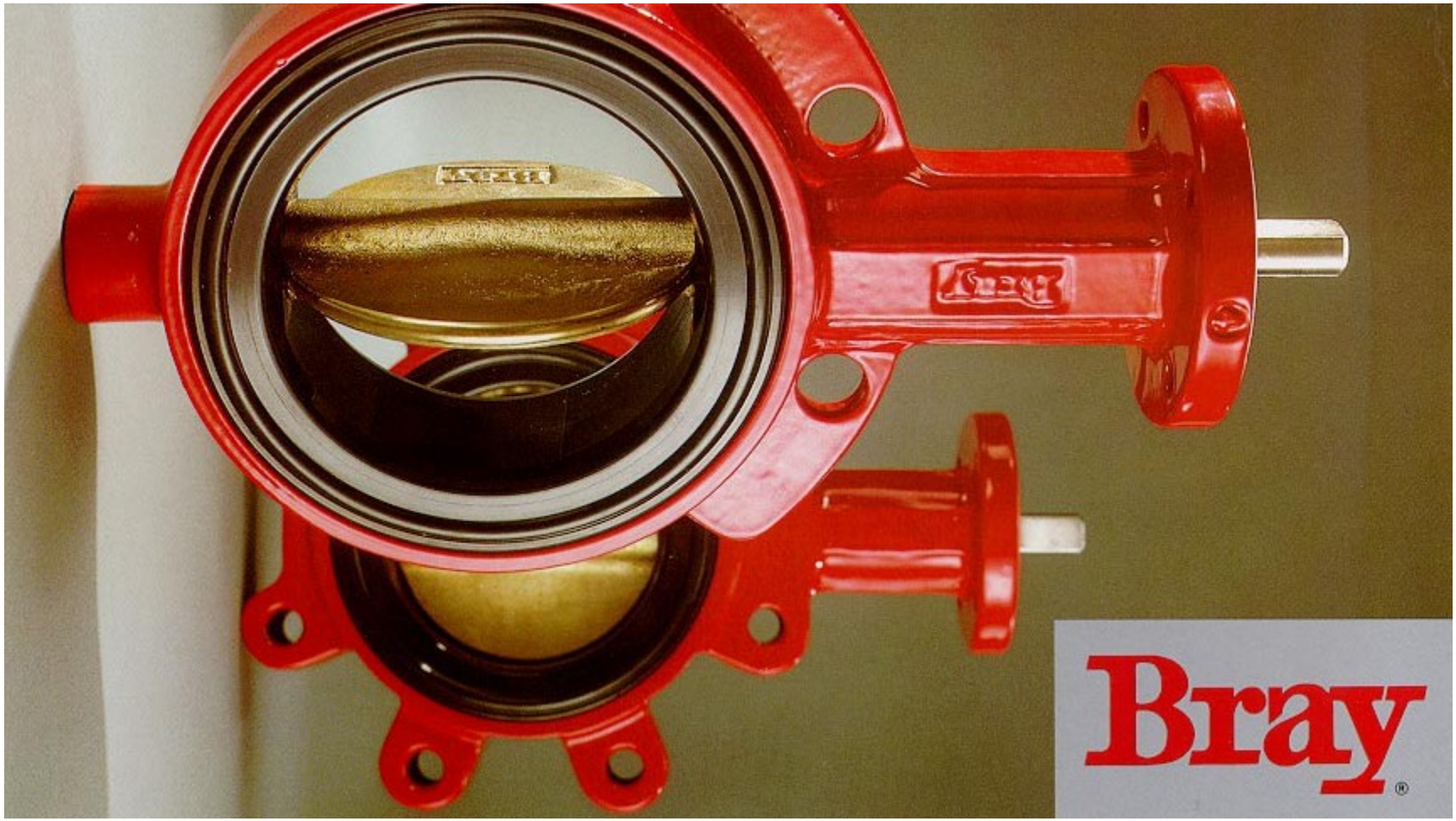


The
High
Performance
Company

# *BUTTERFLY VALVES*

## *RESILIENT SEATED*

**SERIES 30/31** Wafer/Lug
2”-20” (50mm-500mm)

# SERIES 30/31

2”-20” (50mm-500mm) Bray® Controls is proud to offer a high quality line of butterfly valves to meet the requirements of today’s market. Combining years of field experience, research and development, Bray has designed many unique features in the Series 30/31 not previously available. The results are longer service life, greater reliability, ease of parts replacement and interchangeability of components.

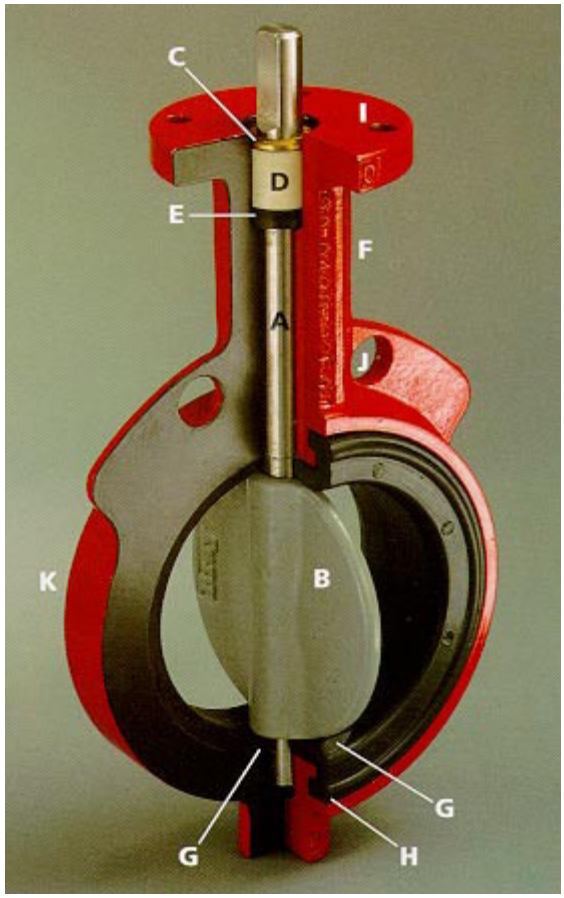


## DISC AND STEM CONNECTION (A)

Features a high-strength through stem design. The close tolerance, double "D" connection that drives the valve disc is an exclusive feature of the Bray valve. It eliminates stem retention components being exposed to the line media, such as disc screws

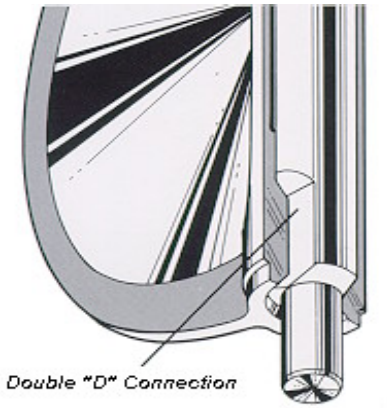


and taper pins, which commonly result in leak paths, corrosion, and vibration failures. Disc screws or taper pins, due to wear and corrosion, often require difficult machining for disassembly. Disassembly of the Bray stem is just a matter of pulling the stem out of the disc. Without fasteners obstructing the line flow, the Series 30/31 Cv values are higher than many other valves, turbulence is reduced, and pressure recovery is increased. The stem ends and top mounting flange are standardized for interchangeability with Bray actuators.

## DISC (B)

Casting is spherically machined, hand polished to provide a bubble-tight shut off, minimum torque, and longer seat life. The disc O.D. clearance is designed to work with all standard piping.

## "SPIROLOX*" RETAINING RING (C)

The stem is retained in the body by means of a unique Stainless Steel “Spirolox®” retaining ring, a thrust washer and two C-rings, manufactured from brass as standard, stainless steel upon request. The retaining ring may be easily removed with a standard hand tool. The stem retaining assembly prevents unintentional removal of the stem during field service.

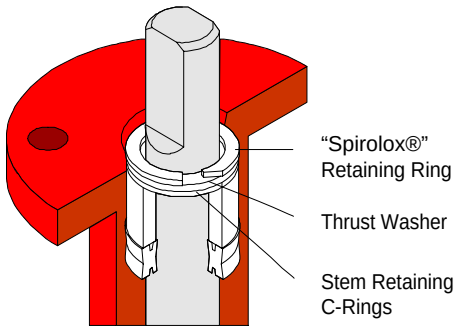


*"Spirolox®" designation is a registered trademark of TRW, Inc.

## STEM BUSHING (D)

Non-Corrosive, heavy duty acetal bushing absorbs actuator side thrusts.

## STEM SEAL (E)

Double "U" cup seal design is self-adjusting and gives positive sealing in both directions. Prevents external substances from entering stem bore.

## NECK (F)

Extended neck length allows for 2" of piping insulation and is easily accessible for mounting actuators.

## PRIMARY AND SECONDARY SEALS (G)

The Primary Seal is achieved by an interference fit of the molded seat flat with the disc hub. The Secondary Seal is created because the stem diameter is greater than the diameter of the seat stem hole. These seals prevent line media from coming in contact with the stem or body.

## BRAY UNIQUE SEAT DESIGN (H)

One of the valve's key elements is Bray's unique "*Tongue-and-Groove*" seat design. This resilient seat features lower torque than many valves on the market today and provides complete isolation of flowing media from the body. The tongue-and-groove seat to body retention method is superior to traditional designs, making field replacement simple and fast. The seat is specifically designed to seal with slip-on or weld-neck flanges. The seat features a molded O-ring which eliminates the use of flange gaskets. An important maintenance feature is that all resilient seats for Bray butterfly valves Series 20, 21, 30, 31, 34 are completely interchangeable.

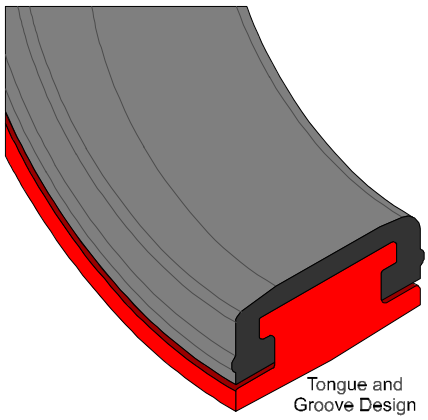

# SERIES 30/31

## ACTUATOR MOUNTING FLANGE AND STEM CONNECTION (I)

Universally designed to ISO 5211 for direct mounting of Bray® power actuators and manual operators.

## FLANGE LOCATING HOLES (J)

Provides quick and proper alignment during installation.

## BODY (K)

One-piece wafer or lug style. Epoxy coating for excellent corrosion resistance. Bray valve bodies meet ANSI 150 pressure ratings for hydrostatic shell test requirements.

## DESIGN FEATURES

Bray's Series 30 valve is a wafer version with flange locating holes, and the Series 31 is the companion lug version for dead-end service and other flange requirements. All Bray valves are tested to 110% of full pressure rating before shipment.
A major design advantage of Bray valve product lines is international compatibility. The same valve is compatible with most world flange standards - ANSI Class 125/150, BS 10 Tables D&E, BS4504 NP 10/16, DIN ND10/16, AS 2129 and JIS 10. In addition, the valves are designed to comply with ISO 5752 face-to-face and ISO 5211 actuator mounting flanges. Therefore, one valve design can be used in many different world markets. Due to a modular concept of design, all Bray® handles, manual gear operators and pneumatic and electric actuators mount directly to Bray valves. No brackets or adapters are required. Bray interchangeability and compatibility offers you the best in uniformity of product line and low-cost performance in the industry today.

## EPOXY COATING CORROSION PROTECTION

Bray's standard product offers valve bodies with an epoxy coating, providing excellent corrosion and wear resistance to the valve's surface. The Bray epoxy coating is a hard, high gloss red finish.

- Chemical Resistance - resists a broad range of chemicals including: dilute aqueous acids and alkalies, petroleum solvents, alcohols, greases and oils. Offers outstanding resistance to humidity and water.
- Weatherability - outdoor tested resistant to ultra-violet radiation.
- Abrasion Resistance - excellent resistance to abrasion.
- Impact Resistance - withstands impact without chipping or cracking.

## NYLON 11 COATING

Optionally available for valve bodies where outstanding protection and performance is needed. A thermoplastic produced from a vegetable base, this coating is inert to fungus growth and molds. Nylon 11 is *USDA Approved*, as well as certified to ANSI/NSF 61 for water service.

- Corrosion Resistance - superior resistance to a broad range of chemical environments. Salt spray tested in excess of 2,000 hours and seawater immersion tested for over 10 years without corrosion to metal substrates. Nylon 11 features a very low coefficient of friction and excellent resistance to impact and ultra-violet radiation.

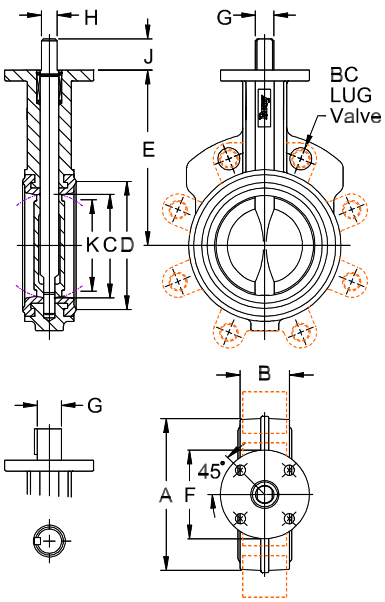


## DIMENSIONS SERIES 30 WAFER

| Valve Size | | | | | | | | Mtg Flange Drilling | | | | | | |
|---|---|---|---|---|---|---|---|---|---|---|---|---|---|---|
| ins | mm | A | B | C | D | E | F | BC | No. Holes | Hole Dia. | G | H | J | K |
| 2 | 50 | 3.69 | 1.62 | 2.00 | 2.84 | 5.50 | 3.54 | 2.76 | 4 | .39 | .55 | .39 | 1.25 | 1.32 |
| 2 1/2 | 65 | 4.19 | 1.75 | 2.50 | 3.34 | 6.00 | 3.54 | 2.76 | 4 | .39 | .55 | .39 | 1.25 | 1.91 |
| 3 | 80 | 4.88 | 1.75 | 3.00 | 4.03 | 6.25 | 3.54 | 2.76 | 4 | .39 | .55 | .39 | 1.25 | 2.55 |
| 4 | 100 | 6.06 | 2.00 | 4.00 | 5.16 | 7.00 | 3.54 | 2.76 | 4 | .39 | .63 | .43 | 1.25 | 3.57 |
| 5 | 125 | 7.12 | 2.12 | 5.00 | 6.16 | 7.50 | 3.54 | 2.76 | 4 | .39 | .75 | .51 | 1.25 | 4.63 |
| 6 | 150 | 8.12 | 2.12 | 5.75 | 7.02 | 8.00 | 3.54 | 2.76 | 4 | .39 | .75 | .51 | 1.25 | 5.45 |
| 8 | 200 | 10.50 | 2.50 | 7.75 | 9.47 | 9.50 | 5.91 | 4.92 | 4 | .57 | .87 | .63 | 1.25 | 7.45 |
| 10 | 250 | 12.75 | 2.50 | 9.75 | 11.47 | 10.75 | 5.91 | 4.92 | 4 | .57 | 1.18 | .87 | 2.00 | 9.53 |
| 12 | 300 | 14.88 | 3.00 | 11.75 | 13.47 | 12.25 | 5.91 | 4.92 | 4 | .57 | 1.18 | .87 | 2.00 | 11.47 |

## SERIES 31 LUG

| Lug Bolting Data | | |
|---|---|---|
| BC | No. Holes | Thrds UNC-2B |
| 4.75 | 4 | 5/8-11 |
| 5.50 | 4 | 5/8-11 |
| 6.00 | 4 | 5/8-11 |
| 7.50 | 8 | 5/8-11 |
| 8.50 | 8 | 3/4-10 |
| 9.50 | 8 | 3/4-10 |
| 11.75 | 8 | 3/4-10 |
| 14.25 | 12 | 7/8-9 |
| 17.00 | 12 | 7/8-9 |

| Valve Size | | | | | | | | Mtg Flange Drilling | | | | | | |
|---|---|---|---|---|---|---|---|---|---|---|---|---|---|---|
| ins | mm | A | B | C | D | E | F | BC | No. Holes | Hole Dia. | G | H | KEY SIZE | K |
| 14 | 350 | 17.05 | 3.00 | 13.25 | 15.28 | 13.62 | 5.91 | 4.92 | 4 | .57 | 1.38 | 2.00 | .39x.39 | 13.04 |
| 16 | 400 | 19.21 | 4.00 | 15.25 | 17.41 | 14.75 | 5.91 | 4.92 | 4 | .57 | 1.38 | 2.00 | .39x.39 | 14.85 |
| 18 | 450 | 21.12 | 4.25 | 17.25 | 19.47 | 16.00 | 8.27 | 6.50 | 4 | .81 | 1.97 | 2.50 | .39x.47 | 16.85 |
| 20 | 500 | 23.25 | 5.00 | 19.25 | 21.59 | 17.25 | 8.27 | 6.50 | 4 | .81 | 1.97 | 2.50 | .39x.47 | 18.73 |

| Lug Bolting Data | | |
|---|---|---|
| BC | No. Holes | Thrds UNC-2B |
| 18.75 | 12 | 1-8 |
| 21.25 | 16 | 1-8 |
| 22.75 | 16 | 1 1/8-7 |
| 25.00 | 20 | 1 1/8-7 |

# SELECTION DATA

## FLANGE REQUIREMENTS

Bray valves are designed for installation between ANSI Class 125/150 lb. weld-neck or slip-on flanges, BS 10 Tables D&E, BS 4504 NP 10/16, DIN ND 10/16, AS 2129 and JIS 10, either flat faced or raised faced. While weld-neck flanges are recommended, Bray has specifically designed its valve seat to work with slip-on flanges, thus eliminating common failures of other butterfly valve designs. When using raised face flanges be sure to properly align valve and flange. Type C stub-end flanges are not recommended.

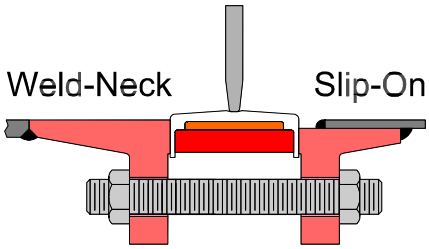


Note: Flanges on both sides of installed valve must be the same type

## PRESSURE RATINGS*

For bi-directional bubble-tight shut off, disc in closed position:

| Inches | mm | psig | bar |
|---|---|---|---|
| 2-12 | 50-300 | 175 | 12 |
| 14-20 | 350-500 | 150 | 10 |

For Dead-end Service Applications:
With *downstream flanges installed* or with *vulcanized seats,* the dead-end pressure ratings are equal to valve bi-directional ratings as stated above. With no downstream flanges or with seats that are not vulcanized, the dead-end pressure rating for 2”-12” valves is 75 psi (5 bar) for 14”-20” valves, 50 psi (3.5 bar.)

* Pressure Ratings are based on standard disc diameters. For low pressure application, Bray offers a standard reduced disc diameter to decrease seating torques and to extend seat life, thus increasing the valve's performance and reducing actuator costs for the customer.

## VELOCITY LIMITS

For On/Off Services
Fluids - 30 ft/sec (9m/s)
Gases - 175 ft/sec (54m/s)

## Cv VALUES-VALVE SIZING COEFFICIENT

| Valve Size | | Disc Position (degrees) | | | | | | | | |
|---|---|---|---|---|---|---|---|---|---|---|
| ins | mm | 90° | 80° | 70° | 60° | 50° | 40° | 30° | 20° | 10° |
| 2 | 50 | 144 | 114 | 84 | 61 | 43 | 27 | 16 | 7 | 1 |
| 21/2 | 65 | 282 | 223 | 163 | 107 | 67 | 43 | 24 | 11 | 1.5 |
| 3 | 80 | 461 | 364 | 267 | 154 | 96 | 61 | 35 | 15 | 2 |
| 4 | 100 | 841 | 701 | 496 | 274 | 171 | 109 | 62 | 27 | 3 |
| 5 | 125 | 1376 | 1146 | 775 | 428 | 268 | 170 | 98 | 43 | 5 |
| 6 | 150 | 1850 | 1542 | 1025 | 567 | 354 | 225 | 129 | 56 | 6 |
| 8 | 200 | 3316 | 2842 | 1862 | 1081 | 680 | 421 | 241 | 102 | 12 |
| 10 | 250 | 5430 | 4525 | 2948 | 1710 | 1076 | 667 | 382 | 162 | 19 |
| 12 | 300 | 8077 | 6731 | 4393 | 2563 | 1594 | 1005 | 555 | 235 | 27 |
| 14 | 350 | 10538 | 8874 | 5939 | 3384 | 2149 | 1320 | 756 | 299 | 34 |
| 16 | 400 | 13966 | 11761 | 7867 | 4483 | 2847 | 1749 | 1001 | 397 | 45 |
| 18 | 450 | 17214 | 14496 | 10065 | 5736 | 3643 | 2237 | 1281 | 507 | 58 |
| 20 | 500 | 22339 | 18812 | 12535 | 7144 | 4536 | 2786 | 1595 | 632 | 72 |

Cv is defined as the volume of water in U.S.G.P.M. that will flow through a given restriction or valve opening with a pressure drop of one (1) p.s.i. at room temperature. Recommended control angles are between 25°-70° open. Preferred

## EXPECTED SEATING/UNSEATING TORQUES (Lb.-Ins.)

| | | Full-Rated Pressure Valve | | | | Reduced Disc |
|---|---|---|---|---|---|---|
| Valve Size | | rP (PSI) | | | | rP (PSI) |
| ins | mm | 50 | 100 | 150 | 175 | 50 |
| 2 | 50 | 125 | 130 | 135 | 140 | 125 |
| 21/2 | 65 | 195 | 205 | 215 | 220 | 195 |
| 3 | 80 | 260 | 275 | 290 | 297 | 260 |
| 4 | 100 | 400 | 425 | 450 | 462 | 267 |
| 5 | 125 | 615 | 670 | 725 | 755 | 410 |
| 6 | 150 | 783 | 871 | 953 | 1003 | 537 |
| 8 | 200 | 1475 | 1650 | 1825 | 1915 | 983 |
| 10 | 250 | 2240 | 2520 | 2800 | 2940 | 1493 |
| 12 | 300 | 3420 | 3870 | 4320 | 4545 | 2280 |
| 14 | 350 | 4950 | 5700 | 6450 | - | 3300 |
| 16 | 400 | 6400 | 7700 | 9000 | - | 4267 |
| 18 | 450 | 7850 | 9850 | 11850 | - | 5267 |
| 20 | 500 | 10300 | 12900 | 15500 | - | 6867 |

Valve Torque Rating - Bray has classified valve torque ratings according to 3 types: non-corrosive lubricating service, general service, and severe service. Torques listed above are for general services.Consult Bray for torque information corresponding to specific application.

TO USE TORQUE CHART, NOTE THE FOLLOWING:
1) For Bray valves, Series 20, 21, 30, 31 and 34.
2) Review Technical Bulletin No. 1001, Expected Seating/Unseating Torque's, for explanation of the 3 service classes and their related seating/unseating torque values for given pressure differentials of Full-Rated and Reduced Disc Diameter valves.
3) Dynamic Torque values are not considered. See Technical Bulletin No. 1002 for evaluation of Dynamic Torque values vs. Seating/Unseating Torque values.
4) Do not apply a safety factor to above torque values when determining actuator output torque requirement.
5) For 3 way assemblies where on valve is opening and other is closing, multiply torque by 1.5 factor.

# SELECTION DATA

## RECOMMENDED SPECIFICATIONS FOR BRAY SERIES 30/31 SHALL BE:

- Epoxy coated, cast iron, wafer or lug bodies.
- With flange locating holes that meet ANSI 125/150 (or BS 10 tables D&E, BS 4504 NP 10/16, DIN ND 10/16, AS 2129 and JIS 10) drillings.
- Through-stem direct drive double "D" design requiring no disc screws or pins to connect stem to disc with no possible leak paths in disc/stem connection.
- Stem mechanically retained in body neck and no part of stem or body exposed to line media.
- Tongue-and-groove seat design with primary hub seal and a molded o-ring suitable for weld-neck and slip-on flanges. Seat totally encapsulates the body with no flange gaskets required.
- Spherically machined, hand polished disc edge and hub for minimum torque and maximum sealing capability.
- Equipped with non-corrosive bushing and self-adjusting stem seal.
- Bi-directional and tested to 110% of full rating.
- Bi-directional pressure ratings:
  2"-12" valves: 175 PSI
  14"-20" valves: 150 PSI
  Lug bodies for dead end service
  With downstream flanges or vulcanized seats, pressure ratings are equal to bi-directional ratings as stated above.
  With no downstream flanges or non-vulcanized seats:
  2"-12" valves: 75 psi.
  14"-20" valves: 50 psi.
- No field adjustment necessary to maintain optimum field performance
- The valve shall be Bray Series 30 wafer / 31 lug or equal.

## TEMP. RANGE OF SEATS

| Type | Maximum | Minimum |
|---|---|---|
| EPDM | +250°F(121°C) | -40°F(-40°C) |
| Buna-N | +212°F(100°C) | 0°F(-18°C) |
| FKM* | +400°F(204°C) | 0°F(-18°C) |

## MATERIALS SELECTION

2"-20" (50mm-500mm)

### BODY:

- Cast Iron ASTM A126 Class B
- Ductile Iron ASTM A536
- Cast Steel ASTM A216 WCB
- Aluminum ASTM B26

### SEAT:

- Buna-N - Food Grade
- EPDM - Food Grade
- FKM*
- White Buna-N - Food Grade

### STEM:

- Coated Carbon Steel
- 416 SS ASTM A582 Type 416
- 304 SS ASTM A276 Type 304
- 316 SS ASTM A276 Type 316
- Monel

### DISC:

- Aluminum Bronze ASTM B148-954
- Coated Ductile Iron ASTM A536 Gr. 65-45-12
- Ductile Iron,Nylon 11 Coated, ASTM A536 Gr. 65-45-12
- Ductile Iron, Halar® Coated, ASTM A536 Gr. 65-45-12
- 316 SS ASTM A351 CF8M
- Hastelloy® C-276 ASTM B575 Alloy N10276

## WEIGHTS

| Valve Size | | Series | Series |
|---|---|---|---|
| ins | mm | 30 | 31 |
| 2 | 50 | 5.5 | 7.0 |
| 2 1/2 | 65 | 7.0 | 8.0 |
| 3 | 80 | 7.5 | 9.0 |
| 4 | 100 | 11.5 | 15.0 |
| 5 | 125 | 14.0 | 20.0 |
| 6 | 150 | 17.0 | 23.0 |
| 8 | 200 | 34.0 | 42.0 |
| 10 | 250 | 49.0 | 66.0 |
| 12 | 300 | 67.0 | 88.0 |
| 14 | 350 | 95.0 | 114.0 |
| 16 | 400 | 135.0 | 166.0 |
| 18 | 450 | 200.0 | 226.0 |
| 20 | 500 | 260.0 | 305.0 |

Weights are in lbs.

## COMPONENTS

| No. | Qty. | Description |
|---|---|---|
| 1 | 1 | Body |
| 2 | 1 | Seat |
| 3 | 1 | Disc |
| 4 | 1 | Stem |
| 5 | 1 | Stem Seal |
| 6 | 1 | Stem Bushing |
| 7 | 2 | Stem Retainer |
| 8 | 1 | Thrust Washer |
| 9 | 1 | Retaining Ring |

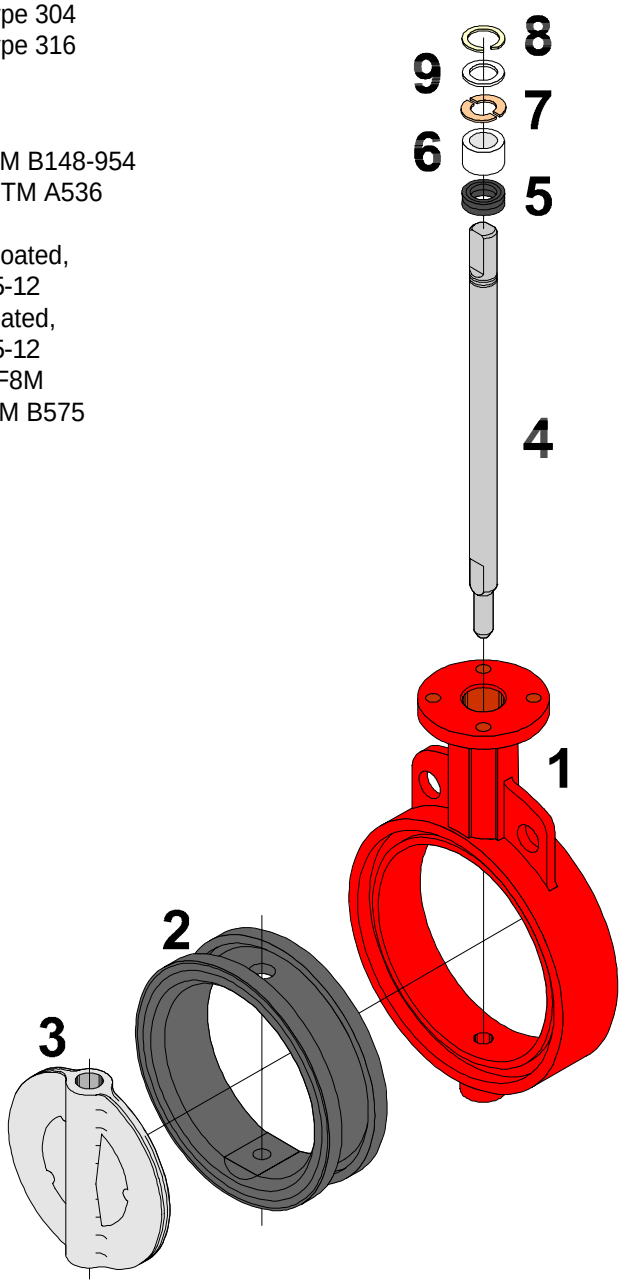


*FKM is the ASTM D1418 designation for Fluorinated Hydrocarbon Elastomers (also called Fluoroelastomers.)
Hastelloy® is a registered trademark of Haynes International, Inc.
Halar® is a registered trademark of Ausimont U.S.A., Inc.

## INSTALLATION

Position the disc in the partially open position, maintaining the disc within body face-to-face. Place the body between flanges and install flange bolts. *Do not use flange gaskets.*

Before tightening flange bolts, carefully open the disc to the full open position to ensure proper alignment and clearance of the disc O.D. with the adjacent pipe I.D. Leave disc in the full open position and tighten flange bolts per required specification. Once bolts are tightened, carefully rotate disc to closed position to ensure disc O.D. clearance.

## MAINTENANCE AND REPAIR

The many Bray features minimize wear and maintenance requirements. No routine lubrication is required. All components-stem, disc, seat, bushing, stem seal, etc., are field replaceable, no adjustment is needed. If components require replacement, remove the valve from the line by placing the disc near the closed position, spread the flanges, support the valve, then remove the flange bolts. No valve maintenance, including removal of manual or power actuators, should be performed until the piping system is completely depressurized.

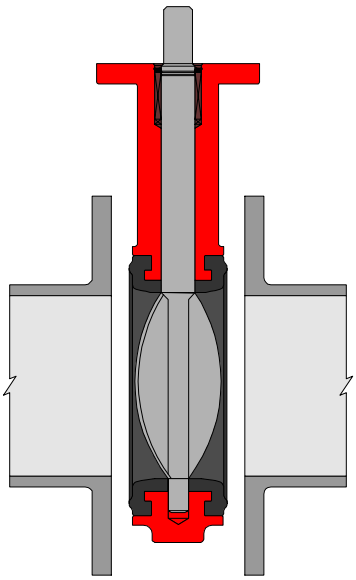

Disc in the Near Closed Position

## DISASSEMBLY

Remove handle, gear operator , or actuator from actuator mounting flange. Remove “Spirolox®” retaining ring. Remove stem with its thrust washer and two C-ring stem retainers. Remove bushing and seal. Remove the disc from the seat, protecting disc edge at all times. Push the seat into an oval shape, then remove the seat from the body.

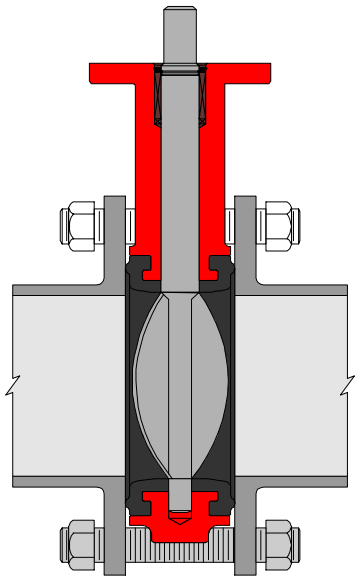

Disc in the Partially Open Position

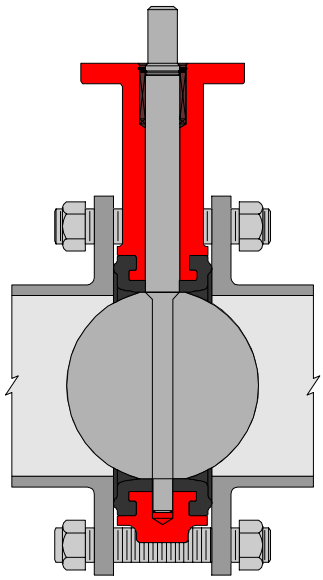

Disc in the Full Open Position

## Assembly

Push the valve seat into an oval and push it into the body with seat stem holes aligned to body stem holes. Push stem into the stem hole of body. For aid in inserting disc, slightly protrude stem beyond the I.D. of the top of the seat. Install a light coating of food grade silicone oil (for silicone free applications use soap and water) on the I.D. of seat. Insert the disc into the seat by lining up the disc hole with the stem hole of the seat. Note: the broached double “D” flats in the disc must be toward the bottom of valve body. (Take special care when lining disc up with stem.) With a downward pressure and rotating the stem back and forth, push the stem until the stem touches the bottom of the body stem hole. Make certain that when pushing the stem through disc bottom, the broached flats of stem and disc are aligned. After the stem has engaged the disc, but before the stem is firmly seated in the body, replace the stem seal and bushing. Install the two C-ring stem retainers in the groove in the stem and thrust washer on top of the C-ring. Seat the stem firmly in the body and install the “Spirolox®” retaining ring back into position.

Bray® CONTROLS

All statements, technical information, and recommendations in this bulletin are for general use only. Consult Bray representatives or factory for the specific requirements and material selection for your intended application. The right to change or modify product design or product without prior notice is reserved. Patents applied for in u.S. and foreign countries.
Bray® is a registered trademark of BRAY INTERNATIONAL., Inc.

A Subsidiary of BRAY INTERNATIONAL, INC.
13333 Westland East Blvd., Houston, Texas 77041
Phone: 281. 894.5454 Fax: 281.894.9499
©1995 Bray International. All rights reserved

# Bray CONTROLS CANADA CORPORATION

SERIES 30
CN–070101
Date: January 2007

| Valve Size | A | B | C | D | E | F | Top Plate Drilling BC | No. of Holes | Hole Diameter | G | H | J | K | L | Adapter Code | Weight (lbs) |
|---|---|---|---|---|---|---|---|---|---|---|---|---|---|---|---|---|
| 2” | 3.69 | 1.62 | 2.00 | 2.84 | 5.50 | 3.54 | 2.76 | 4 | .39 | .55 | .39 | 1.25 | 1.32 | 2.22 | A | 5.5 |
| 2.5” | 4.19 | 1.75 | 2.50 | 3.34 | 6.00 | 3.54 | 2.76 | 4 | .39 | .55 | .39 | 1.25 | 1.91 | 2.47 | A | 7.0 |
| 3” | 4.88 | 1.75 | 3.00 | 4.03 | 6.25 | 3.54 | 2.76 | 4 | .39 | .55 | .39 | 1.25 | 2.55 | 2.81 | A | 7.5 |
| 4” | 6.06 | 2.00 | 4.00 | 5.16 | 7.00 | 3.54 | 2.76 | 4 | .39 | .63 | .43 | 1.25 | 3.57 | 3.41 | B | 11.5 |
| 5” | 7.06 | 2.12 | 5.00 | 6.16 | 7.50 | 3.54 | 2.76 | 4 | .39 | .75 | .51 | 1.25 | 4.63 | 4.03 | C | 14.0 |
| 6” | 8.12 | 2.12 | 5.75 | 7.02 | 8.00 | 3.54 | 2.76 | 4 | .39 | .75 | .51 | 1.25 | 5.45 | 4.53 | C | 17.0 |
| 8” | 10.50 | 2.50 | 7.75 | 9.47 | 9.50 | 5.91 | 4.92 | 4 | .57 | .87 | .63 | 1.25 | 7.45 | 5.75 | D | 34.0 |
| 10” | 12.75 | 2.50 | 9.75 | 11.47 | 10.75 | 5.91 | 4.92 | 4 | .57 | 1.18 | .87 | 2.00 | 9.53 | 7.12 | E | 49.0 |
| 12” | 14.88 | 3.00 | 11.75 | 13.47 | 12.25 | 5.91 | 4.92 | 4 | .57 | 1.18 | .87 | 2.00 | 11.47 | 8.12 | E | 67.0 |

DRAWING NOT TO SCALE, GENERAL ARRANGEMENT DRAWING ONLY.
Note: K dim is disc chordal dimension at valve face.

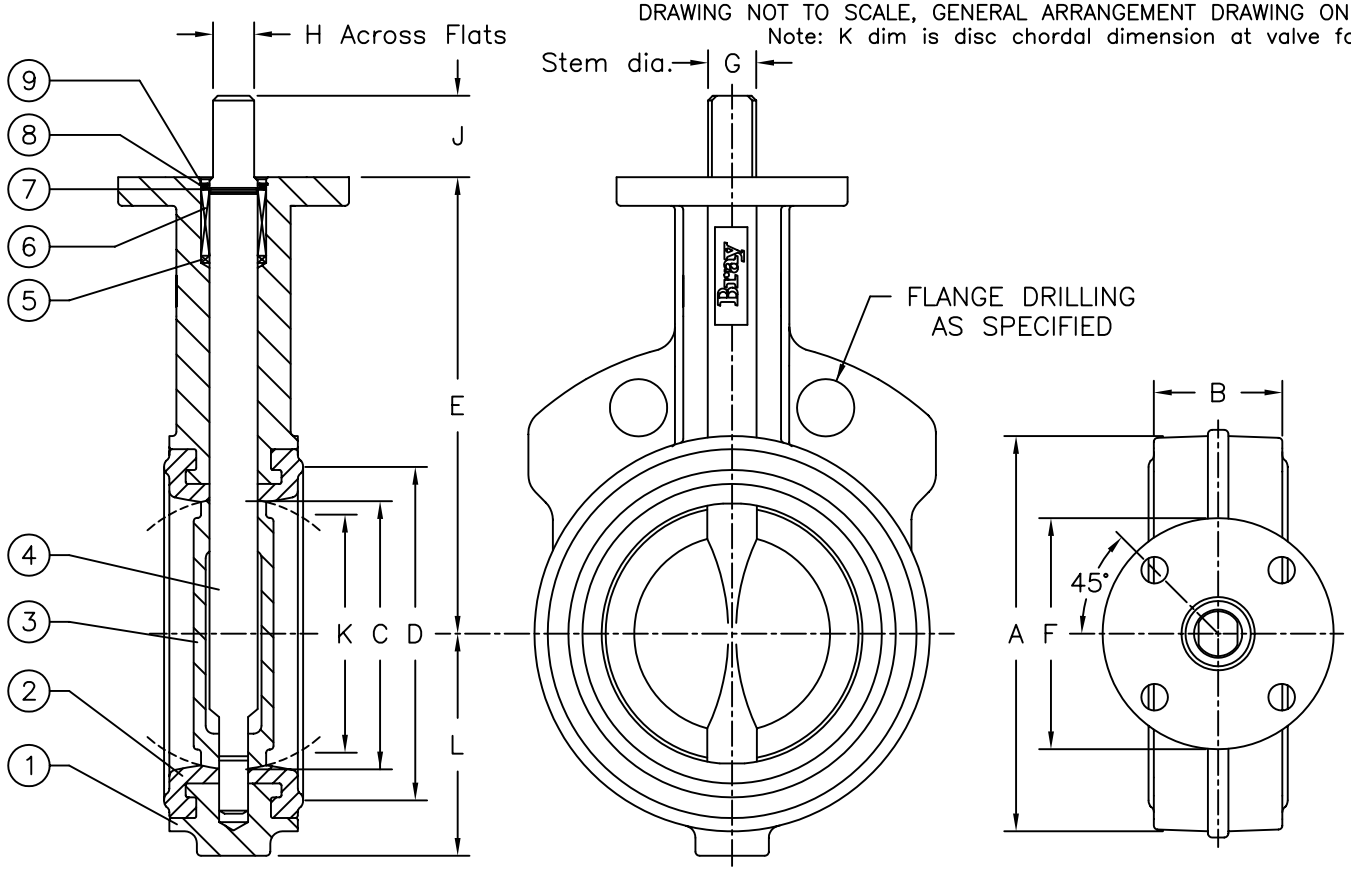


| ITEM No. | NAME | No. REQUIRED | SERIES/PART No. | MATERIAL | SPECIFICATION/REMARKS |
|---|---|---|---|---|---|
| 9 | RETAINING RING | 1 | | 304SS | |
| 8 | THRUST WASHER | 1 | | BRONZE | |
| 7 | STEM RETAINER | 2 | | BRONZE | |
| 6 | BUSHING | 1 | | ACETAL | |
| 5 | PACKING | 1 | | BUNA–N | |
| 4 | STEM | 1 | | 416SS | ASTM A582 Type 416 |
| 3 | DISC | 1 | | 316SS | ASTM A351 CF8M |
| 2 | SEAT | 1 | | EPDM | FOOD GRADE |
| 1 | BODY | 1 | | CAST IRON | ASTM A126 Class B |

Valve Size _____ Flg. Drilling Ansi 150
Pressure Rating 175psi
Distributor _____
CUSTOMER G.E. ZENON
Project Number _____
Contractor _____
Bray Order _____
Certified Correct By S.S. Date Jan. 2007

The High Performance Company
BRAY CONTROLS CANADA
A Subsidiary of BRAY INTERNATIONAL, Inc.

PARTS LIST AND DIMENSIONS (inches)
SERIES 30 BUTTERFLY VALVE
SIZES 2” – 12”

| Series | Size | Part No. | Material Trim Code | Drawing No. |
|---|---|---|---|---|
| 30 | XXXX | 11010 | 169 | CN–070101 |

Bray

# Bray CONTROLS CANADA CORPORATION

SERIES 30
CN–070102
Date: January 2007

| Valve Size | A | B | C | D | E | F | Top Plate Drilling BC | No. of Holes | Hole Diameter | G | J | Key Size | K | L | Adapter Code | Weight (lbs) |
|---|---|---|---|---|---|---|---|---|---|---|---|---|---|---|---|---|
| 14” | 17.05 | 3.00 | 13.25 | 15.28 | 13.62 | 5.91 | 4.92 | 4 | .57 | 1.38 | 2.00 | .39x.39 | 13.04 | 9.38 | F | 95 |
| 16” | 19.21 | 4.00 | 15.25 | 17.41 | 14.75 | 5.91 | 4.92 | 4 | .57 | 1.38 | 2.00 | .39x.39 | 14.85 | 10.75 | F | 135 |
| 18” | 21.12 | 4.25 | 17.25 | 19.47 | 16.00 | 8.27 | 6.50 | 4 | .81 | 1.97 | 2.50 | .47x.39 | 16.85 | 12.00 | G | 200 |
| 20” | 23.25 | 5.00 | 19.25 | 21.59 | 17.25 | 8.27 | 6.50 | 4 | .81 | 1.97 | 2.50 | .47x.39 | 18.73 | 13.72 | G | 260 |

DRAWING NOT TO SCALE, GENERAL ARRANGEMENT DRAWING ONLY.
Note: K dim is disc chordal dimension at valve face.

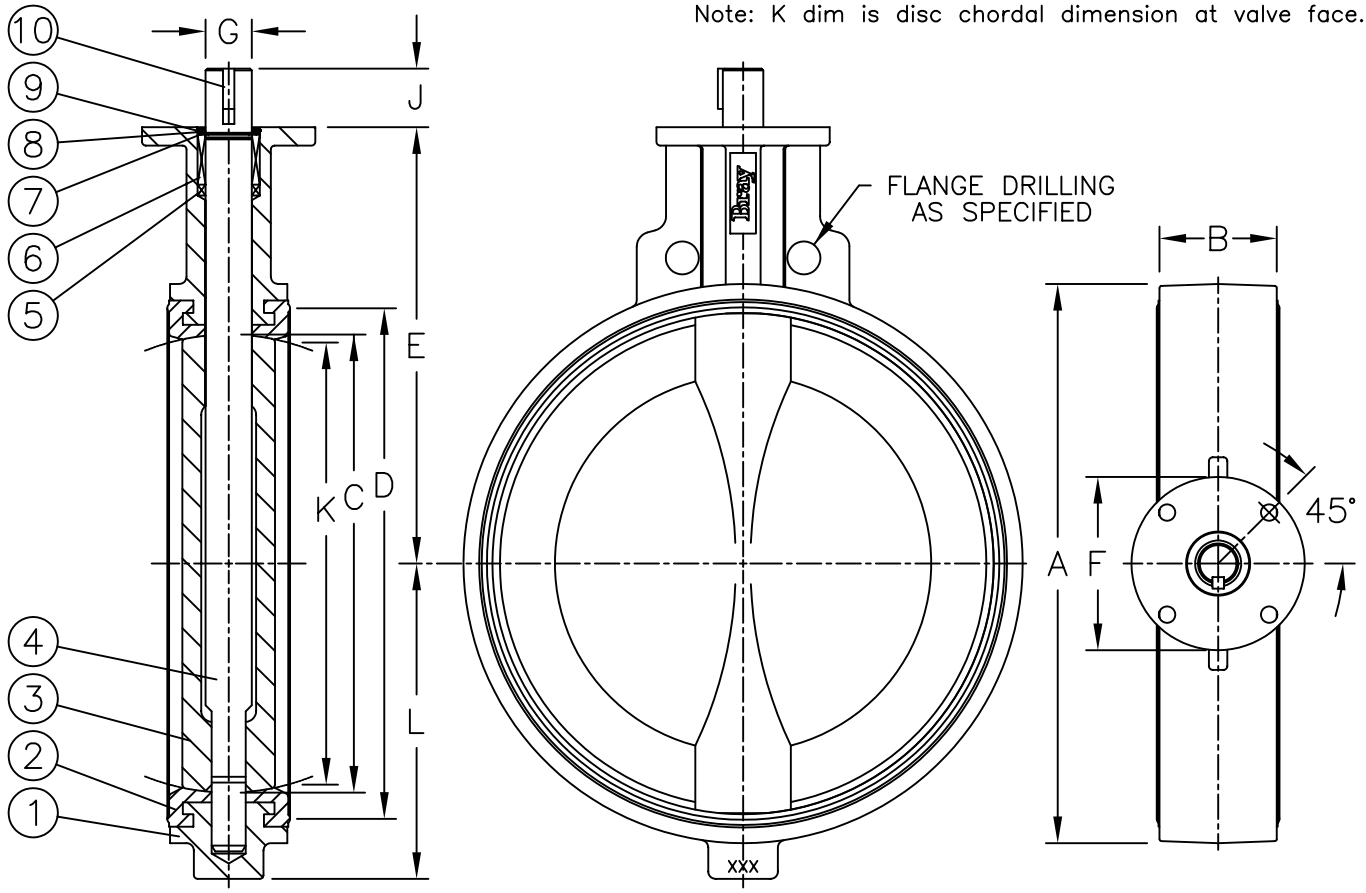


| ITEM No. | NAME | No. REQUIRED | SERIES/PART No. | MATERIAL | SPECIFICATION/REMARKS |
|---|---|---|---|---|---|
| 10 | KEY | 1 | | 18–8SS | |
| 9 | RETAINING RING | 1 | | 304SS | |
| 8 | THRUST WASHER | 1 | | BRONZE | |
| 7 | STEM RETAINER | 2 | | BRONZE | |
| 6 | BUSHING | 1 | | ACETAL | |
| 5 | PACKING | 1 | | BUNA–N | |
| 4 | STEM | 1 | | 416SS | ASTM A582 Type 416 |
| 3 | DISC | 1 | | 316SS | ASTM A351 CF8M |
| 2 | SEAT | 1 | | EPDM | FOOD GRADE |
| 1 | BODY | 1 | | CAST IRON | ASTM A126 Class B |

Valve Size _____ Flg. Drilling Ansi 150
Pressure Rating 150psi
Distributor _____
CUSTOMER G.E. ZENON
Project Number _____
Contractor _____
Bray Order _____
Certified Correct By S.S. Date Jan. 2007

The High Performance Company
BRAY CONTROLS CANADA
A Subsidiary of BRAY INTERNATIONAL, Inc.

PARTS LIST AND DIMENSIONS
SERIES 30 BUTTERFLY VALVE
SIZES 16” thru 20”

| Series | Size | Part No. | Material Trim Code | Drawing No. |
|---|---|---|---|---|
| 30 | XXXX | 11010 | 169 | CN–070102 |

Bray

# Bray CONTROLS CANADA CORPORATION

SERIES 30
CN–070105
Date: January 2007

| Valve Size | A | B | C | D | E | F | Top Plate Drilling BC | No. of Holes | Hole Diameter | G | H | J | K | L | Adapter Code | Weight (lbs) |
|---|---|---|---|---|---|---|---|---|---|---|---|---|---|---|---|---|
| 2” | 3.69 | 1.62 | 2.00 | 2.84 | 5.50 | 3.54 | 2.76 | 4 | .39 | .55 | .39 | 1.25 | 1.32 | 2.22 | A | 5.5 |
| 2.5” | 4.19 | 1.75 | 2.50 | 3.34 | 6.00 | 3.54 | 2.76 | 4 | .39 | .55 | .39 | 1.25 | 1.91 | 2.47 | A | 7.0 |
| 3” | 4.88 | 1.75 | 3.00 | 4.03 | 6.25 | 3.54 | 2.76 | 4 | .39 | .55 | .39 | 1.25 | 2.55 | 2.81 | A | 7.5 |
| 4” | 6.06 | 2.00 | 4.00 | 5.16 | 7.00 | 3.54 | 2.76 | 4 | .39 | .63 | .43 | 1.25 | 3.57 | 3.41 | B | 11.5 |
| 5” | 7.06 | 2.12 | 5.00 | 6.16 | 7.50 | 3.54 | 2.76 | 4 | .39 | .75 | .51 | 1.25 | 4.63 | 4.03 | C | 14.0 |
| 6” | 8.12 | 2.12 | 5.75 | 7.02 | 8.00 | 3.54 | 2.76 | 4 | .39 | .75 | .51 | 1.25 | 5.45 | 4.53 | C | 17.0 |
| 8” | 10.50 | 2.50 | 7.75 | 9.47 | 9.50 | 5.91 | 4.92 | 4 | .57 | .87 | .63 | 1.25 | 7.45 | 5.75 | D | 34.0 |
| 10” | 12.75 | 2.50 | 9.75 | 11.47 | 10.75 | 5.91 | 4.92 | 4 | .57 | 1.18 | .87 | 2.00 | 9.53 | 7.12 | E | 49.0 |
| 12” | 14.88 | 3.00 | 11.75 | 13.47 | 12.25 | 5.91 | 4.92 | 4 | .57 | 1.18 | .87 | 2.00 | 11.47 | 8.12 | E | 67.0 |

DRAWING NOT TO SCALE, GENERAL ARRANGEMENT DRAWING ONLY.
Note: K dim is disc chordal dimension at valve face.

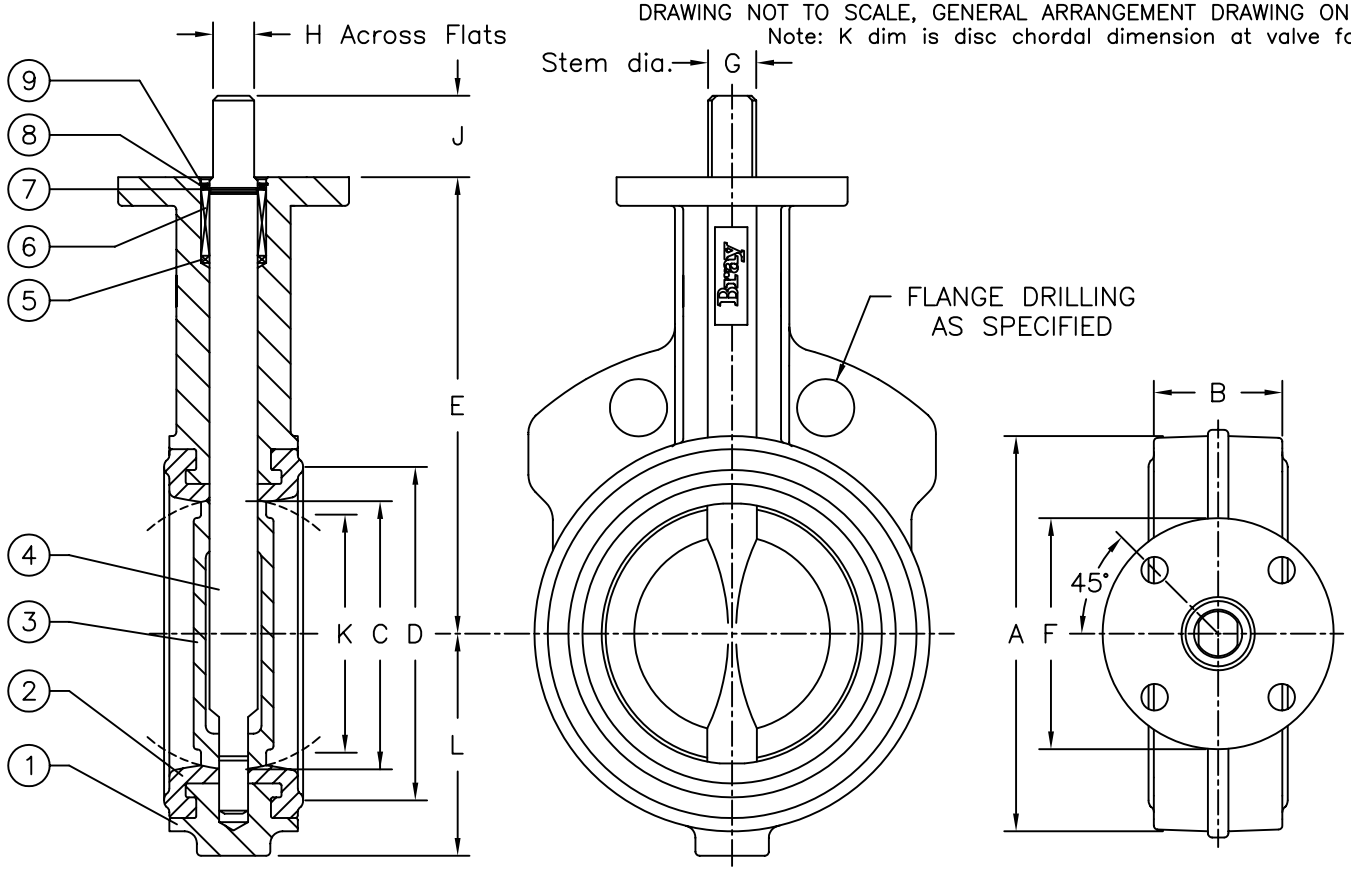


| ITEM No. | NAME | No. REQUIRED | SERIES/PART No. | MATERIAL | SPECIFICATION/REMARKS |
|---|---|---|---|---|---|
| 9 | RETAINING RING | 1 | | 304SS | |
| 8 | THRUST WASHER | 1 | | BRONZE | |
| 7 | STEM RETAINER | 2 | | BRONZE | |
| 6 | BUSHING | 1 | | ACETAL | |
| 5 | PACKING | 1 | | BUNA–N | |
| 4 | STEM | 1 | | 416SS | ASTM A582 Type 416 |
| 3 | DISC | 1 | | NDI | Nylon 11 coated Ductile Iron |
| 2 | SEAT | 1 | | EPDM | FOOD GRADE |
| 1 | BODY | 1 | | CAST IRON | ASTM A126 Class B |

Valve Size _____ Flg. Drilling Ansi 150
Pressure Rating 175psi
Distributor _____
CUSTOMER G.E. ZENON
Project Number _____
Contractor _____
Bray Order _____
Certified Correct By S.S. Date Jan. 2007

The High Performance Company
BRAY CONTROLS CANADA
A Subsidiary of BRAY INTERNATIONAL, Inc.

PARTS LIST AND DIMENSIONS (inches)
SERIES 30 BUTTERFLY VALVE
SIZES 2” – 12”

| Series | Size | Part No. | Material Trim Code | Drawing No. |
|---|---|---|---|---|
| 30 | XXXX | 11010 | 119 | CN–070105 |

Bray

# Bray CONTROLS CANADA CORPORATION

SERIES 30
CN–070106
Date: January 2007

| Valve Size | A | B | C | D | E | F | Top Plate Drilling BC | No. of Holes | Hole Diameter | G | J | Key Size | K | L | Adapter Code | Weight (lbs) |
|---|---|---|---|---|---|---|---|---|---|---|---|---|---|---|---|---|
| 14” | 17.05 | 3.00 | 13.25 | 15.28 | 13.62 | 5.91 | 4.92 | 4 | .57 | 1.38 | 2.00 | .39x.39 | 13.04 | 9.38 | F | 95 |
| 16” | 19.21 | 4.00 | 15.25 | 17.41 | 14.75 | 5.91 | 4.92 | 4 | .57 | 1.38 | 2.00 | .39x.39 | 14.85 | 10.75 | F | 135 |
| 18” | 21.12 | 4.25 | 17.25 | 19.47 | 16.00 | 8.27 | 6.50 | 4 | .81 | 1.97 | 2.50 | .47x.39 | 16.85 | 12.00 | G | 200 |
| 20” | 23.25 | 5.00 | 19.25 | 21.59 | 17.25 | 8.27 | 6.50 | 4 | .81 | 1.97 | 2.50 | .47x.39 | 18.73 | 13.72 | G | 260 |

DRAWING NOT TO SCALE, GENERAL ARRANGEMENT DRAWING ONLY.
Note: K dim is disc chordal dimension at valve face.

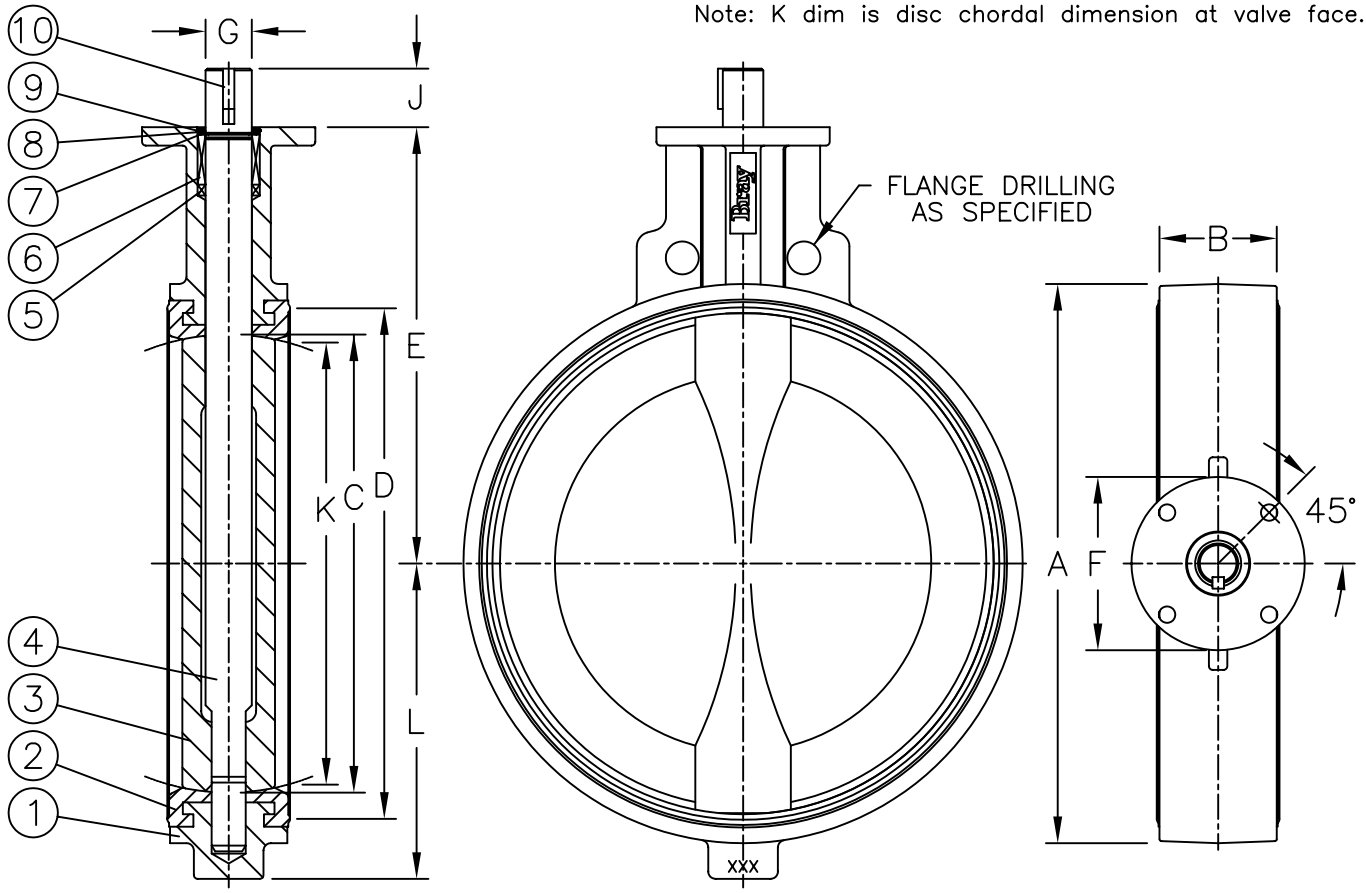


| ITEM No. | NAME | No. REQUIRED | SERIES/PART No. | MATERIAL | SPECIFICATION/REMARKS |
|---|---|---|---|---|---|
| 10 | KEY | 1 | | 18–8SS | |
| 9 | RETAINING RING | 1 | | 304SS | |
| 8 | THRUST WASHER | 1 | | BRONZE | |
| 7 | STEM RETAINER | 2 | | BRONZE | |
| 6 | BUSHING | 1 | | ACETAL | |
| 5 | PACKING | 1 | | BUNA–N | |
| 4 | STEM | 1 | | 416SS | ASTM A582 Type 416 |
| 3 | DISC | 1 | | NDI | Nylon 11 coated Ductile Iron |
| 2 | SEAT | 1 | | EPDM | FOOD GRADE |
| 1 | BODY | 1 | | CAST IRON | ASTM A126 Class B |

Valve Size _____ Flg. Drilling Ansi 150
Pressure Rating 150psi
Distributor _____
CUSTOMER G.E. ZENON
Project Number _____
Contractor _____
Bray Order _____
Certified Correct By S.S. Date Jan. 2007

The High Performance Company
BRAY CONTROLS CANADA
A Subsidiary of BRAY INTERNATIONAL, Inc.

PARTS LIST AND DIMENSIONS
SERIES 30 BUTTERFLY VALVE
SIZES 16” thru 20”

| Series | Size | Part No. | Material Trim Code | Drawing No. |
|---|---|---|---|---|
| 30 | XXXX | 11010 | 119 | CN–070106 |

Bray

*ATTENTION*

THIS DOCUMENT IS VALID IF AND ONLY IF YOU PERSONALLY DOWNLOADED IT FROM WWW.BRAY.COM
IF YOU RECEIVED THIS DOCUMENT FROM ANY OTHER SOURCE, PLEASE TAKE INTO CONSIDERATION THAT ALTERATIONS COULD HAVE BEEN MADE. FOR AN ORIGINAL COPY, PLEASE CONTACT BRAY VALVE AT 281-894-5454

**SERIES 30**
**ES11A-0254**
**Date: JULY 1996**

| Valve Size | A | B | C | D | E | F | G | J | K | L | M |
|---|---|---|---|---|---|---|---|---|---|---|---|
| 2" | 3.69 | 1.62 | 4.32 | 10.62 | 5.50 | 3.54 | 3.16 | 1.25 | 1.32 | 2.22 | 2.55 |
| 2½" | 4.19 | 1.75 | 4.32 | 10.62 | 6.00 | 3.54 | 3.16 | 1.25 | 1.91 | 2.47 | 2.55 |
| 3" | 4.88 | 1.75 | 4.32 | 10.62 | 6.25 | 3.54 | 3.16 | 1.25 | 2.55 | 2.81 | 2.55 |
| 4" | 6.06 | 2.00 | 4.32 | 10.62 | 7.00 | 3.54 | 3.16 | 1.25 | 3.57 | 3.41 | 2.55 |
| 5" | 7.12 | 2.12 | 4.32 | 10.62 | 7.50 | 3.54 | 3.16 | 1.25 | 4.63 | 4.03 | 2.55 |
| 6" | 8.12 | 2.12 | 4.32 | 10.62 | 8.00 | 3.54 | 3.16 | 1.25 | 5.45 | 4.53 | 2.55 |
| 8" | 10.50 | 2.50 | 6.66 | 11.75 | 9.50 | 5.91 | 3.16 | 1.25 | 7.45 | 5.75 | 3.70 |
| 10" | 12.75 | 2.50 | 6.66 | 11.75 | 10.75 | 5.91 | 3.16 | 2.00 | 9.53 | 7.12 | 3.70 |
| 12" | 14.88 | 3.00 | 6.66 | 11.75 | 12.25 | 5.91 | 3.16 | 2.00 | 11.47 | 8.12 | 3.70 |

Note: K dim is disc chordal dimension at valve face.

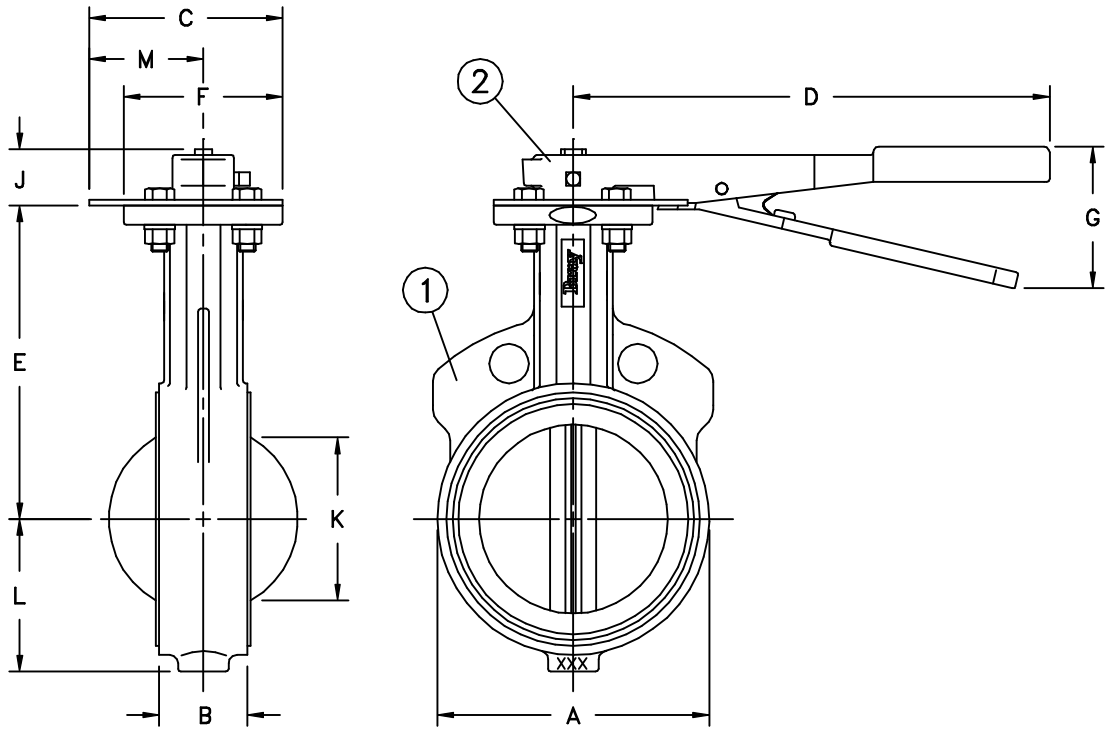


| ITEM No. | NAME | No. REQUIRED | SERIES/PART No. | MATERIAL | SPECIFICATION/REMARKS |
|---|---|---|---|---|---|
| 2 | HANDLE KIT | 1 | | | |
| 1 | VALVE | 1 | | | |

Valve Size _____ Flg. Drilling _____
Pressure Rating _____
Customer/Project _____
Inq./P.O. No. _____
Bray Order No. _____
Certified Correct By _____ Date _____

The High Performance Company

BRAY VALVE & CONTROLS
A Subsidiary of BRAY INTERNATIONAL, Inc.

DIMENSIONAL DRAWING (inches)
SERIES 30, SIZES 2" THRU 12" BUTTERFLY VALVES
WITH SERIES 01 HANDLE KITS

| Series | Size | Part No. | Material Trim Code | Drawing No. |
|---|---|---|---|---|
| | | | | ES11A-0254 |

Bray

*ATTENTION*

THIS DOCUMENT IS VALID IF AND ONLY IF YOU PERSONALLY DOWNLOADED IT FROM WWW.BRAY.COM
IF YOU RECEIVED THIS DOCUMENT FROM ANY OTHER SOURCE, PLEASE TAKE INTO CONSIDERATION THAT ALTERATIONS COULD HAVE BEEN MADE. FOR AN ORIGINAL COPY, PLEASE CONTACT BRAY VALVE AT 281-894-5454

**SERIES 30**
**ES11A-0255**
**Date: JULY 1996**

| Valve Size | Gear Operator | A | B | C | E | F | G | J | K | L | N | P |
|---|---|---|---|---|---|---|---|---|---|---|---|---|
| 2" | 20:1 | 3.69 | 1.62 | 4.00 | 5.50 | 1.77 | 1.62 | 1.44 | 1.32 | 2.22 | 5.34 | 8 |
| 2½" | 20:1 | 4.19 | 1.75 | 4.00 | 6.00 | 1.77 | 1.62 | 1.44 | 1.91 | 2.47 | 5.34 | 8 |
| 3" | 20:1 | 4.88 | 1.75 | 4.00 | 6.25 | 1.77 | 1.62 | 1.44 | 2.55 | 2.81 | 5.34 | 8 |
| 4" | 20:1 | 6.06 | 2.00 | 4.00 | 7.00 | 1.77 | 1.62 | 1.44 | 3.57 | 3.41 | 5.34 | 8 |
| 5" | 20:1 | 7.06 | 2.12 | 4.00 | 7.50 | 1.77 | 1.62 | 1.44 | 4.63 | 4.03 | 5.34 | 8 |
| 6" | 20:1 | 8.12 | 2.12 | 4.00 | 8.00 | 1.77 | 1.62 | 1.44 | 5.45 | 4.53 | 5.34 | 8 |
| 8" | 30:1 | 10.50 | 2.50 | 4.00 | 9.50 | 2.96 | 2.62 | 1.25 | 7.45 | 5.75 | 7.50 | 8 |
| 10" | 30:1 | 12.75 | 2.50 | 4.00 | 10.75 | 2.96 | 2.62 | 1.25 | 9.53 | 7.12 | 7.50 | 8 |
| 12" | 30:1 | 14.88 | 3.00 | 4.00 | 12.25 | 2.96 | 2.62 | 1.25 | 11.47 | 8.12 | 7.50 | 8 |
| 14" | 30:1 | 17.05 | 3.00 | 4.00 | 13.62 | 2.96 | 2.62 | 1.25 | 13.04 | 9.38 | 7.50 | 8 |
| 14" | 50:1 | 17.05 | 3.00 | 6.00 | 13.62 | 2.96 | 3.12 | 1.69 | 13.04 | 9.38 | 11.94 | 12 |
| 16" | 30:1 | 19.21 | 4.00 | 4.00 | 14.75 | 2.96 | 2.62 | 1.25 | 14.85 | 10.75 | 7.50 | 8 |
| 16" | 50:1 | 19.21 | 4.00 | 6.00 | 14.75 | 2.96 | 3.12 | 1.69 | 14.85 | 10.75 | 11.94 | 12 |
| 18" | 80:1 | 21.12 | 4.25 | 6.00 | 16.00 | 4.14 | 4.56 | 2.38 | 16.85 | 12.00 | 14.94 | 12 |
| 20" | 80:1 | 23.25 | 5.00 | 6.00 | 17.25 | 4.14 | 4.56 | 2.38 | 18.73 | 13.72 | 14.94 | 12 |

Note: K dim is disc chordal dimension at valve face.

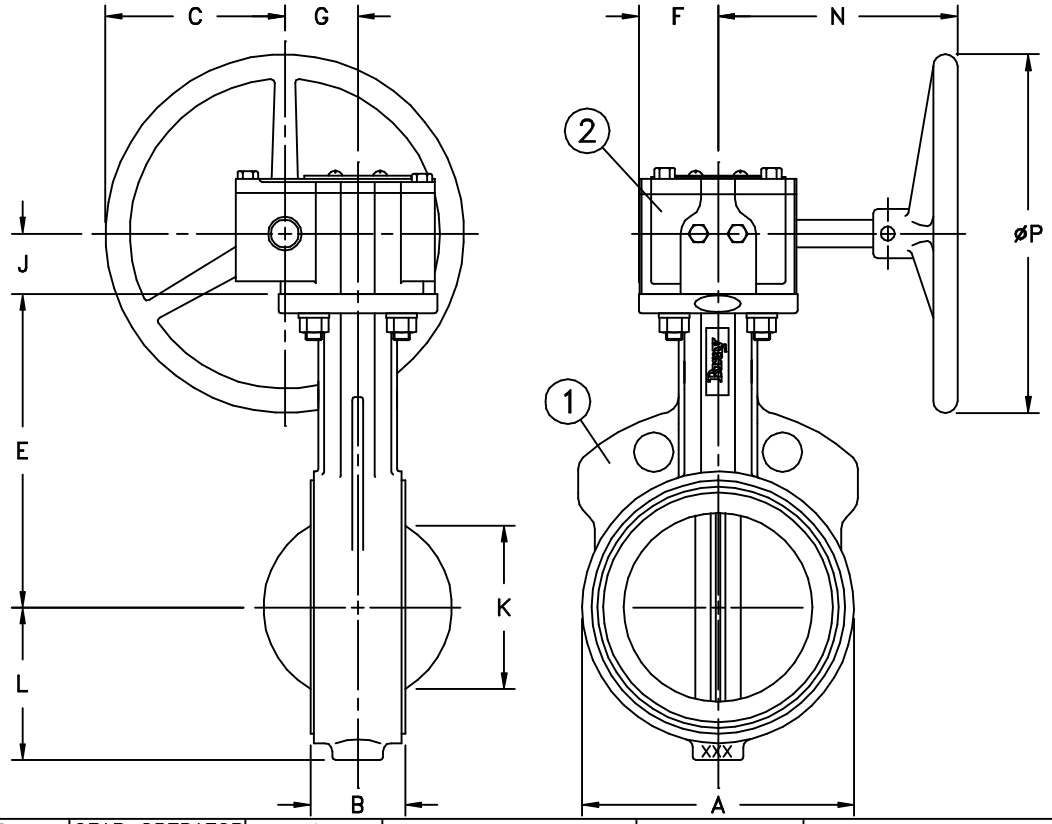


| ITEM No. | NAME | No. REQUIRED | SERIES/PART No. | MATERIAL | SPECIFICATION/REMARKS |
|---|---|---|---|---|---|
| 2 | GEAR OPERATOR | 1 | | | |
| 1 | VALVE | 1 | | | |

Valve Size _____ Flg. Drilling _____
Pressure Rating _____
Customer/Project _____
Inq./P.O. No. _____
Bray Order No. _____
Certified Correct By _____ Date _____

The High Performance Company

BRAY VALVE & CONTROLS
A Subsidiary of BRAY INTERNATIONAL, Inc.

DIMENSIONAL DRAWING (inches)
SERIES 30, SIZES 2" THRU 20" BUTTERFLY VALVES
WITH SERIES 04 GEAR OPERATORS

| Series | Size | Part No. | Material Trim Code | Drawing No. |
|---|---|---|---|---|
| | | | | ES11A-0255 |

Bray

REV. RFP / ERN-2442

ESNUMBER

# Bray CONTROLS CANADA CORPORATION

SERIES 31
CN–070103
Date: January 2007

| Valve Size | A | B | C | D | E | F | Top Plate Drilling BC | Top Plate Drilling No. of Holes | Top Plate Drilling Hole Diameter | G | H | J | K | L | Lug Bolting Data BC | Lug Bolting Data No. of Holes | Lug Bolting Data Threads UNC–2B | Adapter Code | Weight (lbs) |
|---|---|---|---|---|---|---|---|---|---|---|---|---|---|---|---|---|---|---|---|
| 2” | 3.69 | 1.62 | 2.00 | 2.84 | 5.50 | 3.54 | 2.76 | 4 | .39 | .55 | .39 | 1.25 | 1.32 | 2.30 | 4.75 | 4 | .62–11 | A | 7.0 |
| 2.5” | 4.19 | 1.75 | 2.50 | 3.34 | 6.00 | 3.54 | 2.76 | 4 | .39 | .55 | .39 | 1.25 | 1.91 | 2.57 | 5.50 | 4 | .62–11 | A | 8.0 |
| 3” | 4.88 | 1.75 | 3.00 | 4.03 | 6.25 | 3.54 | 2.76 | 4 | .39 | .55 | .39 | 1.25 | 2.55 | 2.81 | 6.00 | 4 | .62–11 | A | 9.0 |
| 4” | 6.06 | 2.00 | 4.00 | 5.16 | 7.00 | 3.54 | 2.76 | 4 | .39 | .63 | .43 | 1.25 | 3.57 | 4.09 | 7.50 | 8 | .62–11 | B | 15.0 |
| 5” | 7.12 | 2.12 | 5.00 | 6.16 | 7.50 | 3.54 | 2.76 | 4 | .39 | .75 | .51 | 1.25 | 4.63 | 4.61 | 8.50 | 8 | .75–10 | C | 20.0 |
| 6” | 8.12 | 2.12 | 5.75 | 7.02 | 8.00 | 3.54 | 2.76 | 4 | .39 | .75 | .51 | 1.25 | 5.45 | 5.06 | 9.50 | 8 | .75–10 | C | 23.0 |
| 8” | 10.50 | 2.50 | 7.75 | 9.47 | 9.50 | 5.91 | 4.92 | 4 | .57 | .87 | .63 | 1.25 | 7.45 | 6.05 | 11.75 | 8 | .75–10 | D | 42.0 |
| 10” | 12.75 | 2.50 | 9.75 | 11.47 | 10.75 | 5.91 | 4.92 | 4 | .57 | 1.18 | .87 | 2.00 | 9.53 | 7.69 | 14.25 | 12 | .88–9 | E | 66.0 |
| 12” | 14.88 | 3.00 | 11.75 | 13.47 | 12.25 | 5.91 | 4.92 | 4 | .57 | 1.18 | .87 | 2.00 | 11.47 | 9.02 | 17.00 | 12 | .88–9 | E | 88.0 |

DRAWING NOT TO SCALE, GENERAL ARRANGEMENT DRAWING ONLY.
Note: K dim is disc chordal dimension at valve face.

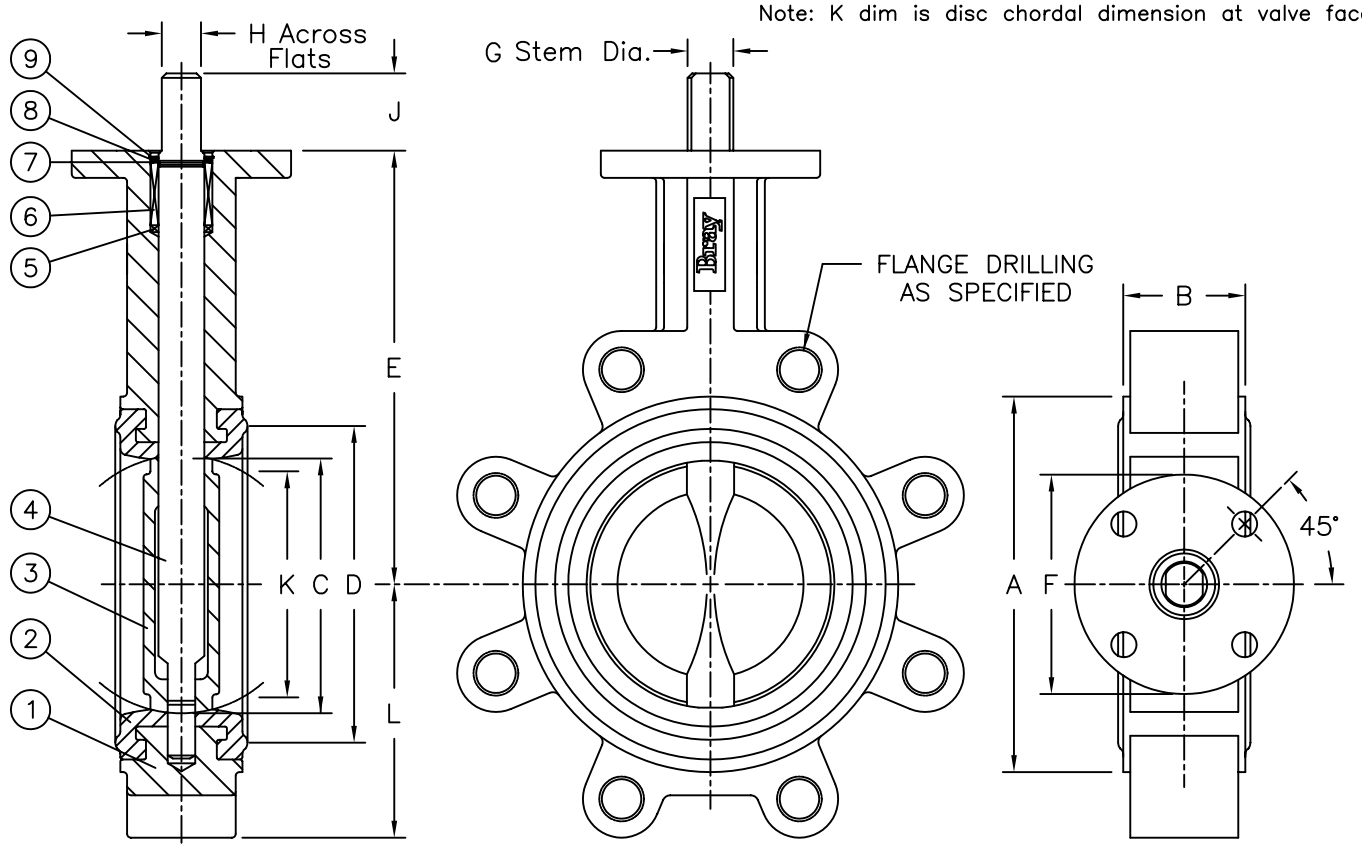


| ITEM No. | NAME | No. REQUIRED | SERIES/PART No. | MATERIAL | SPECIFICATION/REMARKS |
|---|---|---|---|---|---|
| 9 | RETAINING RING | 1 | | 304SS | |
| 8 | THRUST WASHER | 1 | | BRONZE | |
| 7 | STEM RETAINER | 2 | | BRONZE | |
| 6 | BUSHING | 1 | | ACETAL | |
| 5 | PACKING | 1 | | BUNA–N | |
| 4 | STEM | 1 | | 416SS | ASTM A582 Type 416 |
| 3 | DISC | 1 | | 316SS | ASTM A351 CF8M |
| 2 | SEAT | 1 | | EPDM | FOOD GRADE |
| 1 | BODY | 1 | | CAST IRON | ASTM A126 Class B |

Valve Size _____ Flg. Drilling Ansi 150
Pressure Rating 175psi
Distributor _____
CUSTOMER G.E. ZENON
Project Number _____
Contractor _____
Bray Order _____
Certified Correct By S.S. Date Jan. 2007

The High Performance Company
BRAY CONTROLS CANADA
A Subsidiary of BRAY INTERNATIONAL, Inc.

PARTS LIST AND DIMENSIONS (inches)
SERIES 31 BUTTERFLY VALVE
SIZES 2” – 12”

| Series | Size | Part No. | Material Trim Code | Drawing No. |
|---|---|---|---|---|
| 31 | XXXX | 11010 | 169 | CN–070103 |

Bray

# Bray CONTROLS CANADA CORPORATION

SERIES 31
CN–070104
Date: January 2007

| Valve Size | A | B | C | D | E | F | Top Plate Drilling BC | Top Plate Drilling No. of Holes | Top Plate Drilling Hole Diameter | G | J | Key Size | K | L | Lug Bolting Data BC | Lug Bolting Data No. of Holes | Lug Bolting Data Threads UNC–2B | Adapter Code | Weight (lbs) |
|---|---|---|---|---|---|---|---|---|---|---|---|---|---|---|---|---|---|---|---|
| 14” | 17.05 | 3.00 | 13.25 | 15.28 | 13.62 | 5.91 | 4.92 | 4 | .57 | 1.38 | 2.00 | .39x.39 | 13.04 | 9.93 | 18.75 | 12 | 1.00–8 | F | 114 |
| 16” | 19.21 | 4.00 | 15.25 | 17.14 | 14.75 | 5.91 | 4.92 | 4 | .57 | 1.38 | 2.00 | .39x.39 | 14.85 | 11.30 | 21.25 | 16 | 1.00–8 | F | 166 |
| 18” | 21.12 | 4.25 | 17.25 | 19.47 | 16.00 | 8.27 | 6.50 | 4 | .81 | 1.97 | 2.50 | .47x.39 | 16.85 | 12.16 | 22.75 | 16 | 1.12–7 | G | 226 |
| 20” | 23.25 | 5.00 | 19.25 | 21.59 | 17.25 | 8.27 | 6.50 | 4 | .81 | 1.97 | 2.50 | .47x.39 | 18.73 | 14.00 | 25.00 | 20 | 1.12–7 | G | 305 |

DRAWING NOT TO SCALE, GENERAL ARRANGEMENT DRAWING ONLY.
Note: K dim is disc chordal dimension at valve face.

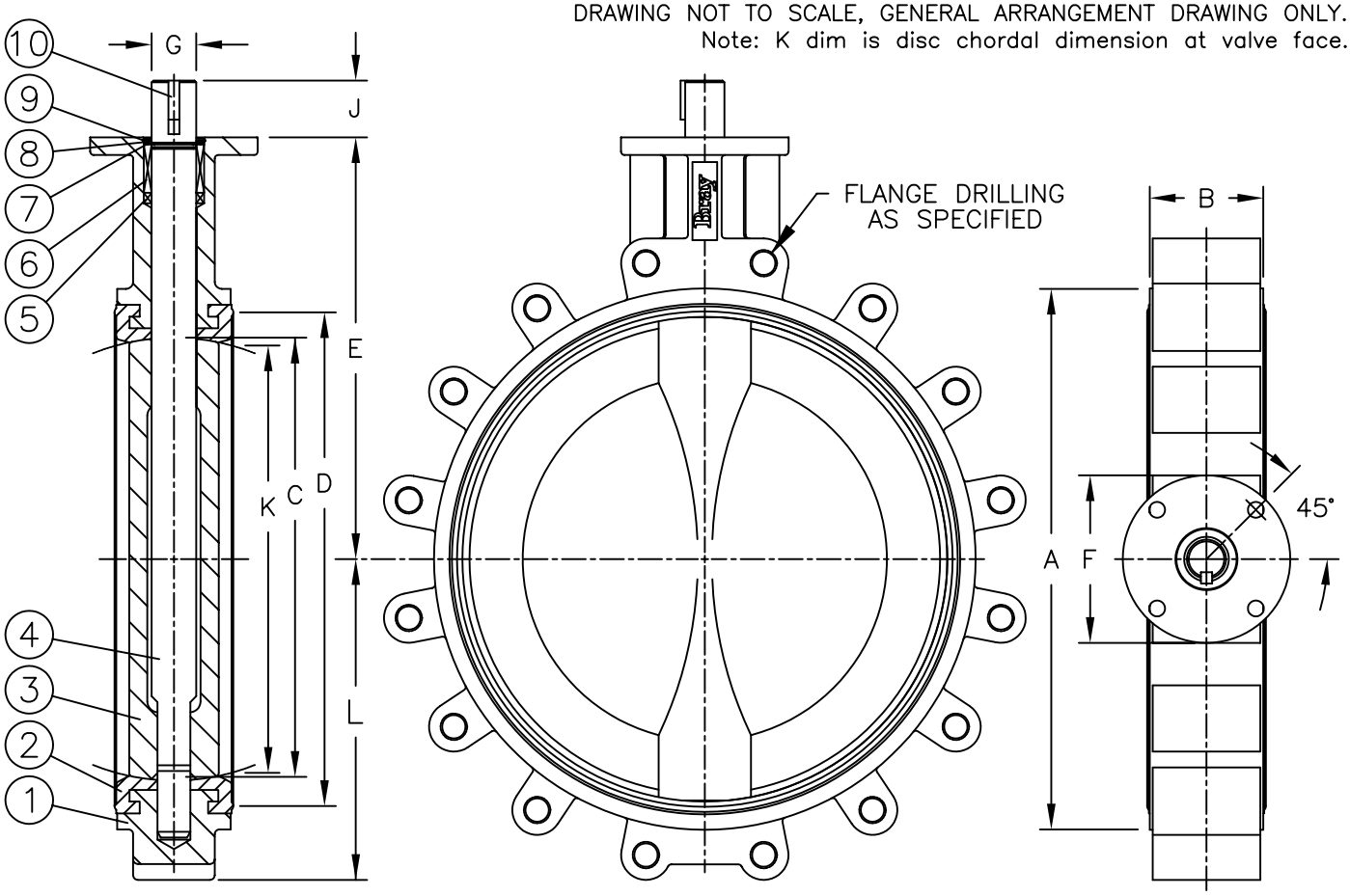


| ITEM No. | NAME | No. REQUIRED | SERIES/PART No. | MATERIAL | SPECIFICATION/REMARKS |
|---|---|---|---|---|---|
| 10 | KEY | 1 | | 18–8SS | |
| 9 | RETAINING RING | 1 | | 304SS | |
| 8 | THRUST WASHER | 1 | | BRONZE | |
| 7 | STEM RETAINER | 2 | | BRONZE | |
| 6 | BUSHING | 1 | | ACETAL | |
| 5 | PACKING | 1 | | BUNA–N | |
| 4 | STEM | 1 | | 416SS | ASTM A582 Type 416 |
| 3 | DISC | 1 | | 316SS | ASTM A351 CF8M |
| 2 | SEAT | 1 | | EPDM | FOOD GRADE |
| 1 | BODY | 1 | | CAST IRON | ASTM A126 Class B |

Valve Size _____ Flg. Drilling Ansi 150
Pressure Rating 150psi
Distributor _____
CUSTOMER G.E. ZENON
Project Number _____
Contractor _____
Bray Order _____
Certified Correct By S.S. Date Jan. 2007

The High Performance Company
BRAY CONTROLS CANADA
A Subsidiary of BRAY INTERNATIONAL, Inc.

PARTS LIST AND DIMENSIONS
SERIES 31 BUTTERFLY VALVE
SIZES 16” thru 20”

| Series | Size | Part No. | Material Trim Code | Drawing No. |
|---|---|---|---|---|
| 31 | XXXX | 11010 | 169 | CN–070104 |

Bray

# Bray CONTROLS CANADA CORPORATION

SERIES 31
CN–070107
Date: January 2007

| Valve Size | A | B | C | D | E | F | Top Plate Drilling BC | Top Plate Drilling No. of Holes | Top Plate Drilling Hole Diameter | G | H | J | K | L | Lug Bolting Data BC | Lug Bolting Data No. of Holes | Lug Bolting Data Threads UNC–2B | Adapter Code | Weight (lbs) |
|---|---|---|---|---|---|---|---|---|---|---|---|---|---|---|---|---|---|---|---|
| 2” | 3.69 | 1.62 | 2.00 | 2.84 | 5.50 | 3.54 | 2.76 | 4 | .39 | .55 | .39 | 1.25 | 1.32 | 2.30 | 4.75 | 4 | .62–11 | A | 7.0 |
| 2.5” | 4.19 | 1.75 | 2.50 | 3.34 | 6.00 | 3.54 | 2.76 | 4 | .39 | .55 | .39 | 1.25 | 1.91 | 2.57 | 5.50 | 4 | .62–11 | A | 8.0 |
| 3” | 4.88 | 1.75 | 3.00 | 4.03 | 6.25 | 3.54 | 2.76 | 4 | .39 | .55 | .39 | 1.25 | 2.55 | 2.81 | 6.00 | 4 | .62–11 | A | 9.0 |
| 4” | 6.06 | 2.00 | 4.00 | 5.16 | 7.00 | 3.54 | 2.76 | 4 | .39 | .63 | .43 | 1.25 | 3.57 | 4.09 | 7.50 | 8 | .62–11 | B | 15.0 |
| 5” | 7.12 | 2.12 | 5.00 | 6.16 | 7.50 | 3.54 | 2.76 | 4 | .39 | .75 | .51 | 1.25 | 4.63 | 4.61 | 8.50 | 8 | .75–10 | C | 20.0 |
| 6” | 8.12 | 2.12 | 5.75 | 7.02 | 8.00 | 3.54 | 2.76 | 4 | .39 | .75 | .51 | 1.25 | 5.45 | 5.06 | 9.50 | 8 | .75–10 | C | 23.0 |
| 8” | 10.50 | 2.50 | 7.75 | 9.47 | 9.50 | 5.91 | 4.92 | 4 | .57 | .87 | .63 | 1.25 | 7.45 | 6.05 | 11.75 | 8 | .75–10 | D | 42.0 |
| 10” | 12.75 | 2.50 | 9.75 | 11.47 | 10.75 | 5.91 | 4.92 | 4 | .57 | 1.18 | .87 | 2.00 | 9.53 | 7.69 | 14.25 | 12 | .88–9 | E | 66.0 |
| 12” | 14.88 | 3.00 | 11.75 | 13.47 | 12.25 | 5.91 | 4.92 | 4 | .57 | 1.18 | .87 | 2.00 | 11.47 | 9.02 | 17.00 | 12 | .88–9 | E | 88.0 |

DRAWING NOT TO SCALE, GENERAL ARRANGEMENT DRAWING ONLY.
Note: K dim is disc chordal dimension at valve face.

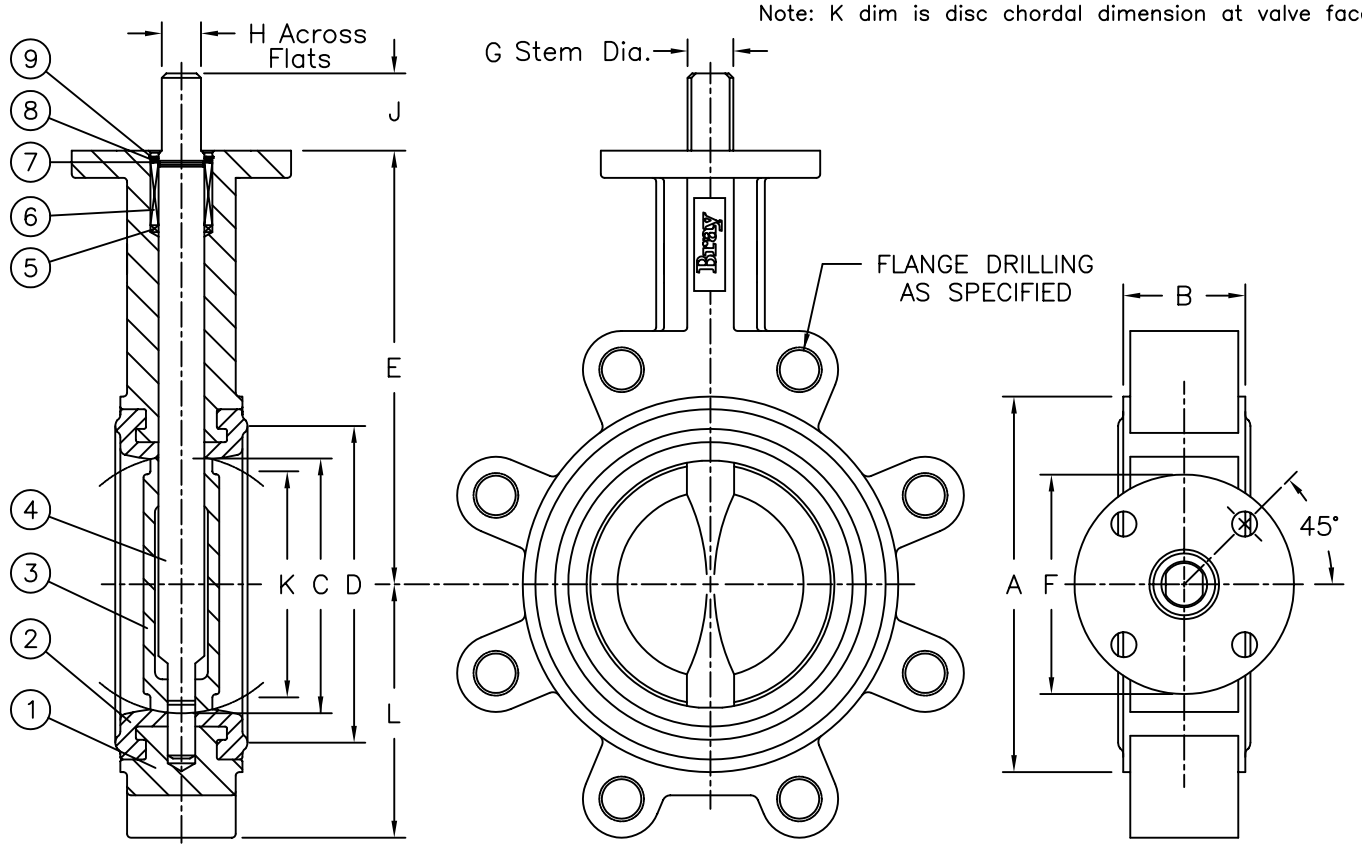


| ITEM No. | NAME | No. REQUIRED | SERIES/PART No. | MATERIAL | SPECIFICATION/REMARKS |
|---|---|---|---|---|---|
| 9 | RETAINING RING | 1 | | 304SS | |
| 8 | THRUST WASHER | 1 | | BRONZE | |
| 7 | STEM RETAINER | 2 | | BRONZE | |
| 6 | BUSHING | 1 | | ACETAL | |
| 5 | PACKING | 1 | | BUNA–N | |
| 4 | STEM | 1 | | 416SS | ASTM A582 Type 416 |
| 3 | DISC | 1 | | NDI | Nylon 11 coated Ductile Iron |
| 2 | SEAT | 1 | | EPDM | FOOD GRADE |
| 1 | BODY | 1 | | CAST IRON | ASTM A126 Class B |

Valve Size _____ Flg. Drilling Ansi 150
Pressure Rating 175psi
Distributor _____
CUSTOMER G.E. ZENON
Project Number _____
Contractor _____
Bray Order _____
Certified Correct By S.S. Date Jan. 2007

The High Performance Company
BRAY CONTROLS CANADA
A Subsidiary of BRAY INTERNATIONAL, Inc.

PARTS LIST AND DIMENSIONS (inches)
SERIES 31 BUTTERFLY VALVE
SIZES 2” – 12”

| Series | Size | Part No. | Material Trim Code | Drawing No. |
|---|---|---|---|---|
| 31 | XXXX | 11010 | 119 | CN–070107 |

Bray

# Bray CONTROLS CANADA CORPORATION

SERIES 31
CN–070108
Date: January 2007

| Valve Size | A | B | C | D | E | F | Top Plate Drilling BC | Top Plate Drilling No. of Holes | Top Plate Drilling Hole Diameter | G | J | Key Size | K | L | Lug Bolting Data BC | Lug Bolting Data No. of Holes | Lug Bolting Data Threads UNC–2B | Adapter Code | Weight (lbs) |
|---|---|---|---|---|---|---|---|---|---|---|---|---|---|---|---|---|---|---|---|
| 14” | 17.05 | 3.00 | 13.25 | 15.28 | 13.62 | 5.91 | 4.92 | 4 | .57 | 1.38 | 2.00 | .39x.39 | 13.04 | 9.93 | 18.75 | 12 | 1.00–8 | F | 114 |
| 16” | 19.21 | 4.00 | 15.25 | 17.14 | 14.75 | 5.91 | 4.92 | 4 | .57 | 1.38 | 2.00 | .39x.39 | 14.85 | 11.30 | 21.25 | 16 | 1.00–8 | F | 166 |
| 18” | 21.12 | 4.25 | 17.25 | 19.47 | 16.00 | 8.27 | 6.50 | 4 | .81 | 1.97 | 2.50 | .47x.39 | 16.85 | 12.16 | 22.75 | 16 | 1.12–7 | G | 226 |
| 20” | 23.25 | 5.00 | 19.25 | 21.59 | 17.25 | 8.27 | 6.50 | 4 | .81 | 1.97 | 2.50 | .47x.39 | 18.73 | 14.00 | 25.00 | 20 | 1.12–7 | G | 305 |

DRAWING NOT TO SCALE, GENERAL ARRANGEMENT DRAWING ONLY.
Note: K dim is disc chordal dimension at valve face.

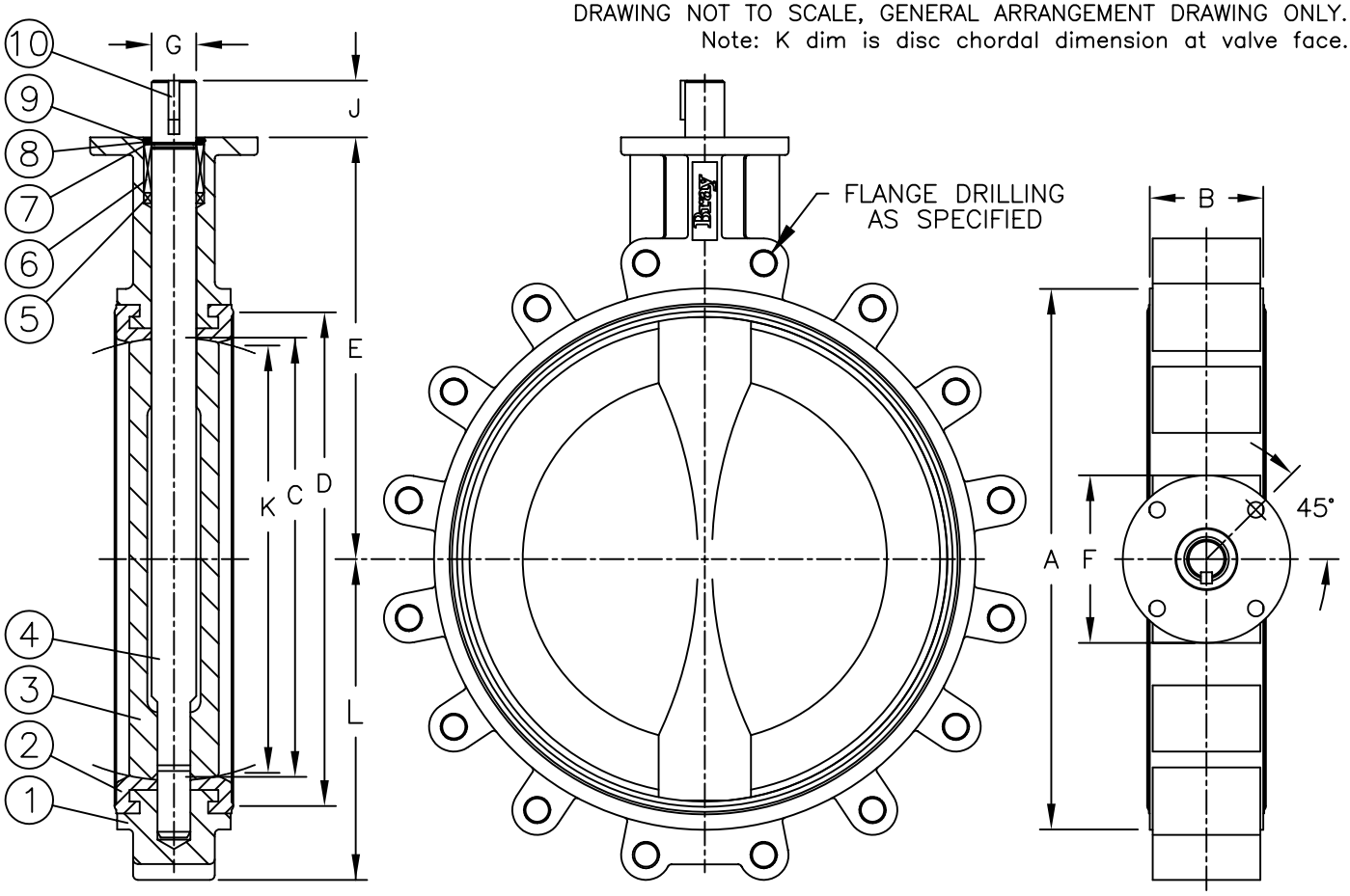


| ITEM No. | NAME | No. REQUIRED | SERIES/PART No. | MATERIAL | SPECIFICATION/REMARKS |
|---|---|---|---|---|---|
| 10 | KEY | 1 | | 18–8SS | |
| 9 | RETAINING RING | 1 | | 304SS | |
| 8 | THRUST WASHER | 1 | | BRONZE | |
| 7 | STEM RETAINER | 2 | | BRONZE | |
| 6 | BUSHING | 1 | | ACETAL | |
| 5 | PACKING | 1 | | BUNA–N | |
| 4 | STEM | 1 | | 416SS | ASTM A582 Type 416 |
| 3 | DISC | 1 | | NDI | Nylon 11 coated Ductile Iron |
| 2 | SEAT | 1 | | EPDM | FOOD GRADE |
| 1 | BODY | 1 | | CAST IRON | ASTM A126 Class B |

Valve Size _____ Flg. Drilling Ansi 150
Pressure Rating 150psi
Distributor _____
CUSTOMER G.E. ZENON
Project Number _____
Contractor _____
Bray Order _____
Certified Correct By S.S. Date Jan. 2007

The High Performance Company
BRAY CONTROLS CANADA
A Subsidiary of BRAY INTERNATIONAL, Inc.

PARTS LIST AND DIMENSIONS
SERIES 31 BUTTERFLY VALVE
SIZES 16” thru 20”

| Series | Size | Part No. | Material Trim Code | Drawing No. |
|---|---|---|---|---|
| 31 | XXXX | 11010 | 119 | CN–070108 |

Bray

*ATTENTION*

THIS DOCUMENT IS VALID IF AND ONLY IF YOU PERSONALLY DOWNLOADED IT FROM WWW.BRAY.COM
IF YOU RECEIVED THIS DOCUMENT FROM ANY OTHER SOURCE, PLEASE TAKE INTO CONSIDERATION THAT ALTERATIONS COULD HAVE BEEN MADE. FOR AN ORIGINAL COPY, PLEASE CONTACT BRAY VALVE AT 281-894-5454

**SERIES 31**
**ES11A-0256**
**Date: JULY 1996**

| Valve Size | A | B | C | D | E | F | G | J | K | L | M |
|---|---|---|---|---|---|---|---|---|---|---|---|
| 2" | 3.69 | 1.62 | 4.32 | 10.62 | 5.50 | 3.54 | 3.16 | 1.25 | 1.32 | 2.30 | 2.55 |
| 2½" | 4.19 | 1.75 | 4.32 | 10.62 | 6.00 | 3.54 | 3.16 | 1.25 | 1.91 | 2.57 | 2.55 |
| 3" | 4.88 | 1.75 | 4.32 | 10.62 | 6.25 | 3.54 | 3.16 | 1.25 | 2.55 | 2.81 | 2.55 |
| 4" | 6.06 | 2.00 | 4.32 | 10.62 | 7.00 | 3.54 | 3.16 | 1.25 | 3.57 | 4.09 | 2.55 |
| 5" | 7.12 | 2.12 | 4.32 | 10.62 | 7.50 | 3.54 | 3.16 | 1.25 | 4.63 | 4.61 | 2.55 |
| 6" | 8.12 | 2.12 | 4.32 | 10.62 | 8.00 | 3.54 | 3.16 | 1.25 | 5.45 | 5.06 | 2.55 |
| 8" | 10.50 | 2.50 | 6.66 | 11.75 | 9.50 | 5.91 | 3.16 | 1.25 | 7.45 | 6.05 | 3.70 |
| 10" | 12.75 | 2.50 | 6.66 | 11.75 | 10.75 | 5.91 | 3.16 | 2.00 | 9.53 | 7.69 | 3.70 |
| 12" | 14.88 | 3.00 | 6.66 | 11.75 | 12.25 | 5.91 | 3.16 | 2.00 | 11.47 | 9.02 | 3.70 |

Note: K dim is disc chordal dimension at valve face.

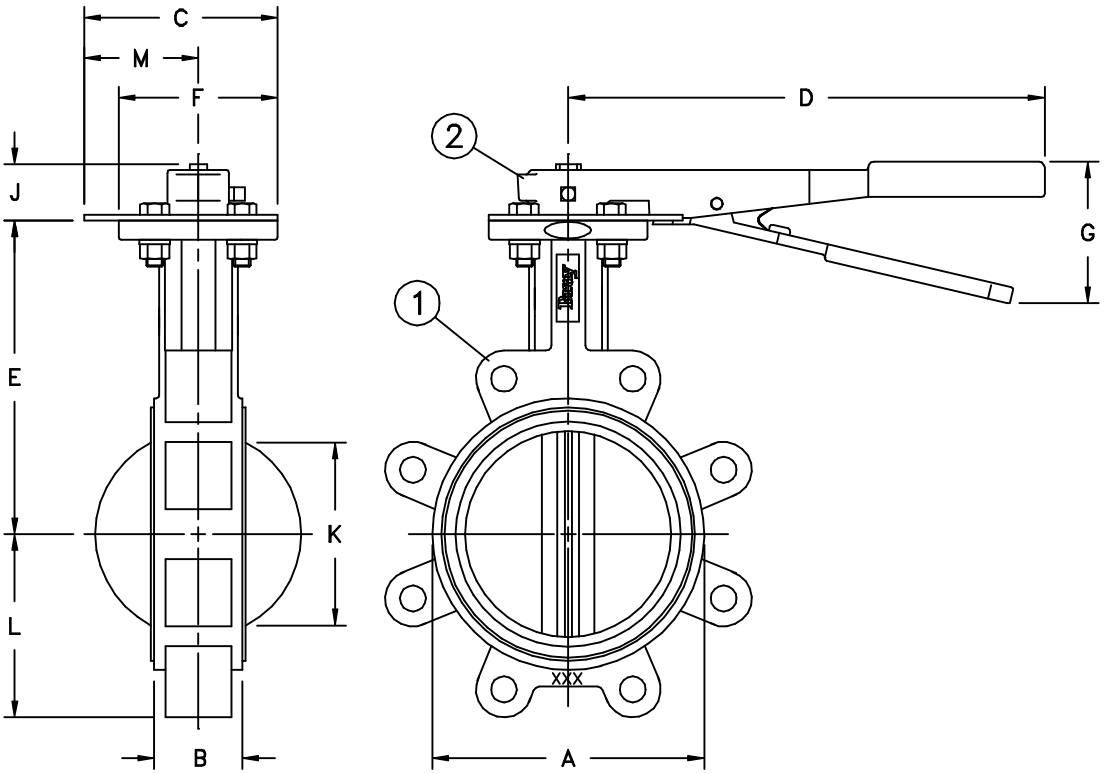


| ITEM No. | NAME | No. REQUIRED | SERIES/PART No. | MATERIAL | SPECIFICATION/REMARKS |
|---|---|---|---|---|---|
| 2 | HANDLE KIT | 1 | | | |
| 1 | VALVE | 1 | | | |

Valve Size _____ Flg. Drilling _____
Pressure Rating _____
Customer/Project _____
Inq./P.O. No. _____
Bray Order No. _____
Certified Correct By _____ Date _____

The High Performance Company

BRAY VALVE & CONTROLS
A Subsidiary of BRAY INTERNATIONAL, Inc.

DIMENSIONAL DRAWING (inches)
SERIES 31, SIZES 2" THRU 12" BUTTERFLY VALVES
WITH SERIES 01 HANDLE KIT

| Series | Size | Part No. | Material Trim Code | Drawing No. |
|---|---|---|---|---|
| | | | | ES11A-0256 |

Bray

REV. RFP / ERN-2442

ESNUMBER

*ATTENTION*

THIS DOCUMENT IS VALID IF AND ONLY IF YOU PERSONALLY DOWNLOADED IT FROM WWW.BRAY.COM
IF YOU RECEIVED THIS DOCUMENT FROM ANY OTHER SOURCE, PLEASE TAKE INTO CONSIDERATION THAT ALTERATIONS COULD HAVE BEEN MADE. FOR AN ORIGINAL COPY, PLEASE CONTACT BRAY VALVE AT 281-894-5454

**SERIES 31**
**ES11A-0257**
**Date: JULY 1996**

| Valve Size | Gear Operator | A | B | C | E | F | G | J | K | L | N | P |
|---|---|---|---|---|---|---|---|---|---|---|---|---|
| 2" | 20:1 | 3.69 | 1.62 | 4.00 | 5.50 | 1.77 | 1.62 | 1.44 | 1.32 | 2.30 | 5.34 | 8 |
| 2½" | 20:1 | 4.19 | 1.75 | 4.00 | 6.00 | 1.77 | 1.62 | 1.44 | 1.91 | 2.57 | 5.34 | 8 |
| 3" | 20:1 | 4.88 | 1.75 | 4.00 | 6.25 | 1.77 | 1.62 | 1.44 | 2.55 | 2.81 | 5.34 | 8 |
| 4" | 20:1 | 6.06 | 2.00 | 4.00 | 7.00 | 1.77 | 1.62 | 1.44 | 3.57 | 4.09 | 5.34 | 8 |
| 5" | 20:1 | 7.06 | 2.12 | 4.00 | 7.50 | 1.77 | 1.62 | 1.44 | 4.63 | 4.61 | 5.34 | 8 |
| 6" | 20:1 | 8.12 | 2.12 | 4.00 | 8.00 | 1.77 | 1.62 | 1.44 | 5.45 | 5.06 | 5.34 | 8 |
| 8" | 30:1 | 10.50 | 2.50 | 4.00 | 9.50 | 2.96 | 2.62 | 1.25 | 7.45 | 6.05 | 7.50 | 8 |
| 10" | 30:1 | 12.75 | 2.50 | 4.00 | 10.75 | 2.96 | 2.62 | 1.25 | 9.53 | 7.69 | 7.50 | 8 |
| 12" | 30:1 | 14.88 | 3.00 | 4.00 | 12.25 | 2.96 | 2.62 | 1.25 | 11.47 | 9.02 | 7.50 | 8 |
| 14" | 30:1 | 17.05 | 3.00 | 4.00 | 13.62 | 2.96 | 2.62 | 1.25 | 13.04 | 9.93 | 7.50 | 8 |
| 14" | 50:1 | 17.05 | 3.00 | 6.00 | 13.62 | 2.96 | 3.12 | 1.69 | 13.04 | 9.93 | 11.94 | 12 |
| 16" | 30:1 | 19.21 | 4.00 | 4.00 | 14.75 | 2.96 | 2.62 | 1.25 | 14.85 | 11.30 | 7.50 | 8 |
| 16" | 50:1 | 19.21 | 4.00 | 6.00 | 14.75 | 2.96 | 3.12 | 1.69 | 14.85 | 11.30 | 11.94 | 12 |
| 18" | 80:1 | 21.12 | 4.25 | 6.00 | 16.00 | 4.14 | 4.56 | 2.38 | 16.85 | 12.16 | 14.94 | 12 |
| 20" | 80:1 | 23.25 | 5.00 | 6.00 | 17.25 | 4.14 | 4.56 | 2.38 | 18.73 | 14.00 | 14.94 | 12 |

Note: K dim is disc chordal dimension at valve face.

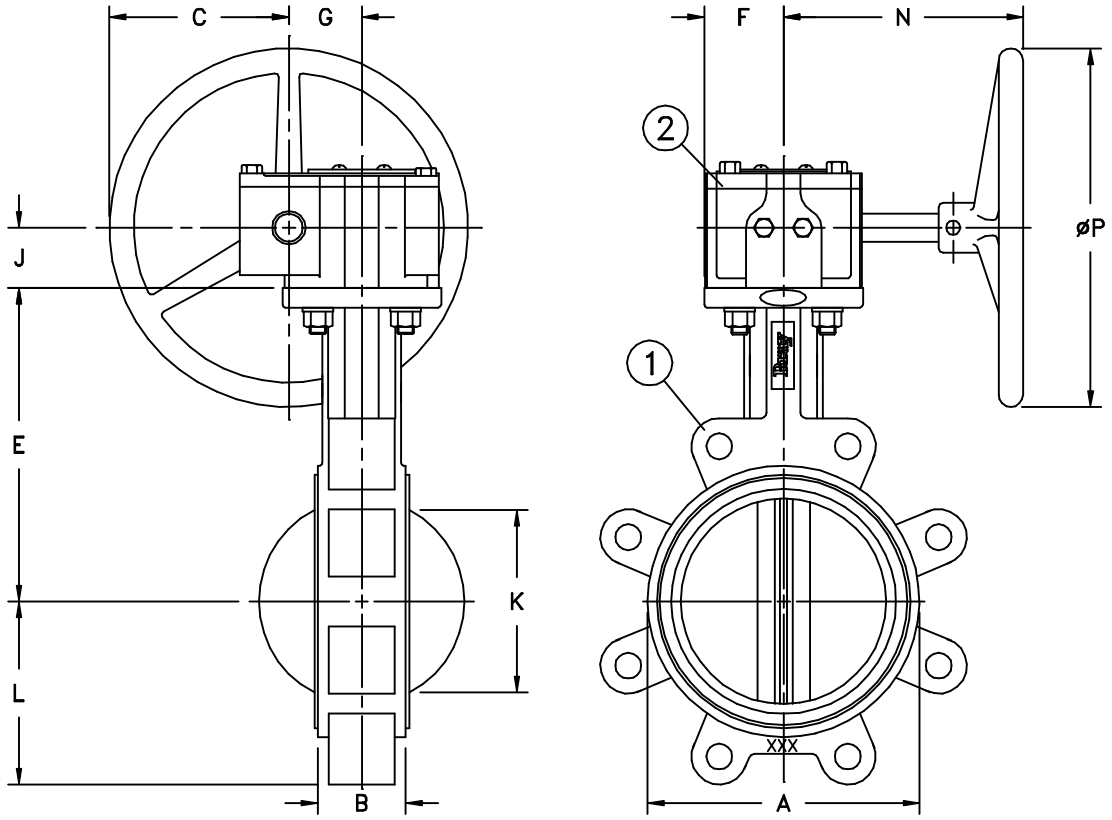


| ITEM No. | NAME | No. REQUIRED | SERIES/PART No. | MATERIAL | SPECIFICATION/REMARKS |
|---|---|---|---|---|---|
| 2 | GEAR OPERATOR | 1 | | | |
| 1 | VALVE | 1 | | | |

Valve Size _____ Flg. Drilling _____
Pressure Rating _____
Customer/Project _____
Inq./P.O. No. _____
Bray Order No. _____
Certified Correct By _____ Date _____

The High Performance Company

BRAY VALVE & CONTROLS
A Subsidiary of BRAY INTERNATIONAL, Inc.

DIMENSIONAL DRAWING (inches)
SERIES 31, SIZES 2" THRU 20" BUTTERFLY VALVES
WITH SERIES 04 GEAR OPERATORS

| Series | Size | Part No. | Material Trim Code | Drawing No. |
|---|---|---|---|---|
| | | | | ES11A-0257 |

Bray

REV. RFP / ERN-2442

ESNUMBER

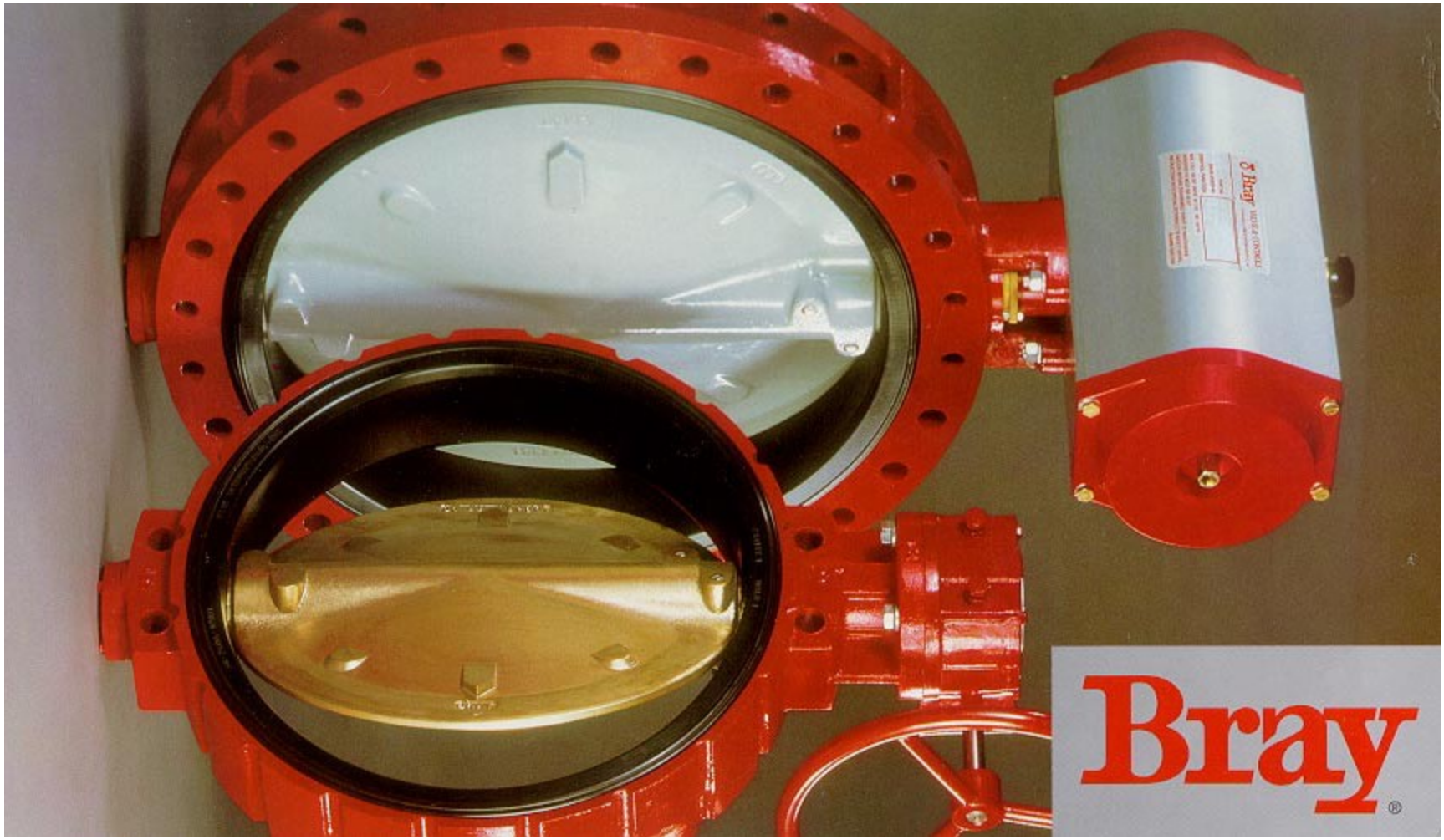


The High Performance Company

# BUTTERFLY VALVES

## *LARGE DIAMETER / RESILIENT SEATED*

**SERIES 32 / 33** Wafer
22”-36” (550mm-900mm)
**SERIES 35 / 36** Full Flanged
22”-72” (550mm-1800mm)

# FEATURES

22”-72” (550mm-1800mm)
Bray Controls proudly offers this line of heavy duty, large diameter, resilient seated butterfly valves. The Series 32/33 valves are wafer versions with the Series 32 valve rated for 75 PSI and the Series 33 designed for a higher rating of 150 PSI. The Series 35/36 are full-flanged versions rated at 75 and 150 PSI respectively. This valve series has many of the design features and benefits of the smaller Bray valves, such as high Cv ratings, minimum parts exposed to the line media, greater reliability and a proven record of long service life. Engineering innovation and exceptional quality are the focus of Bray's unique design features.

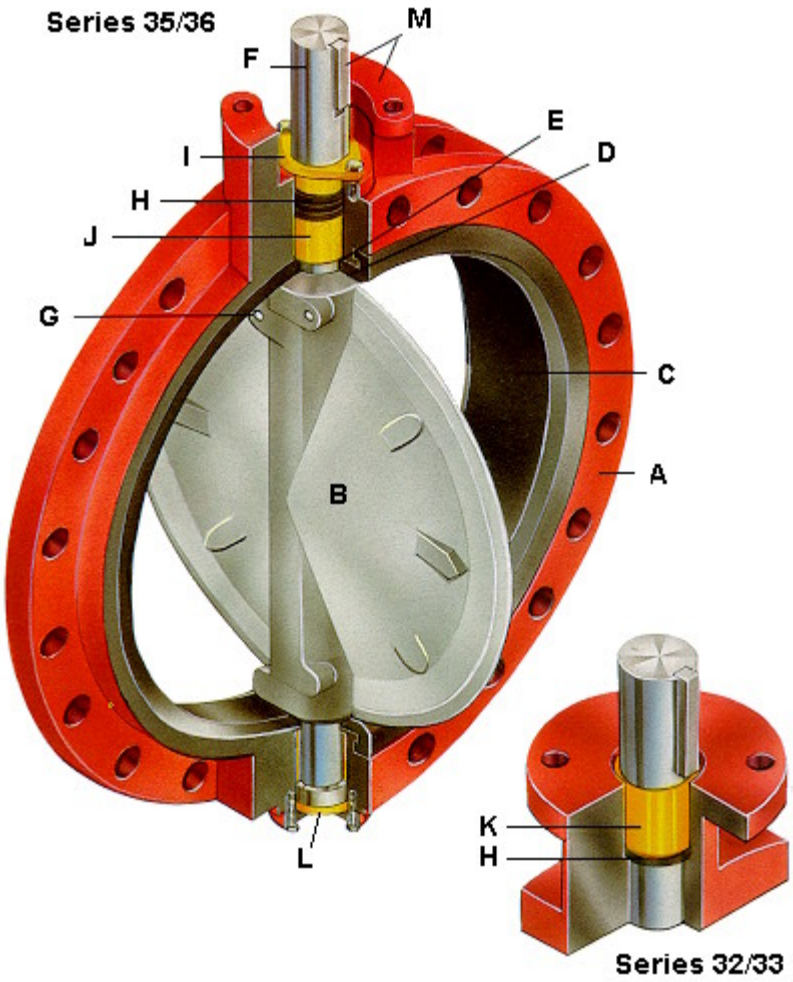


## BODY (A)
One piece wafer or full flanged style. All bodies are drilled to be compatible with ANSI 125/150 or other international flange standards. The Series 35/36 may be bolted to allow downstream flange removal or cross-bolted for maximum resistance to line stresses.

## DISC (B)
The high strength casting is spherically machined, hand polished to provide 360° concentric seating bi-directional bubble-tight shut off, minimum torque and longer seat life. The symmetrical disc profile enhances valve performance - the $C_v$ values are higher, turbulence is reduced and pressure recovery is increased. The disc O.D. clearance is designed to work with all standard piping.

## SEAT (C)
One of the valve's key elements is Bray's unique *tongue and groove* seat design which fully isolates the body from line media. The Bray resilient seat offers lower torque than many valves on the market today, and is excellent for most vacuum services. The *tongue and groove* seat to body retention method is the most advanced design in the industry, making field replacement simple and fast. The strategically located molded-in O-ring completely eliminates the requirement of flange gaskets. The seat isolates the valve body and stem from line media and has been specifically designed to seal with slip-on or weld-neck flanges.

## PRIMARY SEAL (D)
The primary seal is achieved by preloaded contact of spherically machined hand polished disc hubs with unique molded seat flat surfaces. This sealing method isolates the flowing media from the stem and body material at all angles of valve disc seating.

## SECONDARY SEAL (E)
A secondary seal is achieved by an interference fit of the stem and seat hole diameters.

## STEM (F)
Bray's one piece through stem design is completely isolated from the flowing media and achieves high torsional strength. The stem ends are standardized for direct mounting and interchangeability with Bray actuators.

## TAPER PINS (G)
Tangential taper pins of 17-4 PH stainless steel are driven and mechanically locked for maximum torsional capacity and resistance to vibration. O-rings are installed with the driven-in taper pins to insure bubble-tight shutoff under pressure or vacuum conditions.

## STEM PACKING (H)
This advanced V-Type packing design in the Series 35/36 is self-adjusting with bi-directional sealing which prevents external substances from entering the upper stem bore. This packing is externally adjustable and functions well for vacuum applications as well as third pressure seal in emergency situations. The stem packing in the Series 32/33 is a V-cup self-adjusting design.

## ADJUSTABLE PACKING GLAND (I)
A bronze gland allows for field adjustment of stem packing without removing manual operators or power actuators. (Series 35/36 only)

## STEM BEARING (J)
To minimize bearing friction and operating torque, heavy wall bronze sleeve bearings are utilized. (Series 35/36 only)

## STEM BUSHING (K)
Heavy wall bronze bushing absorbs actuator side thrusts. (Series 32/33 only)

## VERTICAL THRUST BEARING (L)
A bronze vertical thrust bearing eliminates disc displacement due to the weight of the stem and disc.

## ACTUATOR MOUNTING FLANGE AND STEM CONNECTION (M)
Due to a modular concept of design, all Bray manual gear operators and pneumatic or electric actuators mount directly to Bray valves.

# SPECIFICATIONS

## RECOMMENDED SPECIFICATIONS FOR BRAY SERIES 32/33, 35/36 SHALL BE:

- Cast iron, wafer or double flanged bodies.
- Tongue-and-groove seat design with primary hub seal and a molded O-ring suitable for weld-neck and slip-on flanges.
- No field adjustments necessary to maintain optimum field performance.
- Seat totally encapsulates the body with no flange gaskets required.
- Spherically machined, hand polished disc edge and hub for minimum torque and maximum sealing capability.
- Equipped with non-corrosive bushing and self-adjusting stem seals for pressure or vaccum on wafer valves.
- On flanged valves, equipped with packing glands and upper/lower bronze bearings. The packing gland to be adjustable without removing manual operator or actuator.
- Bi-directional and tested to 110% of full pressure rating.
- Disc stem connected by 17-4 PH tangential taper pins driven, O-ring sealed, and mechanically locked.

## MATERIALS SELECTION

22”-72” (550mm-1800mm)

### BODY:

- Cast Iron ASTM A126 Class B
- Ductile Iron ASTM A536 Gr. 65-45-12
- Cast Steel ASTM A216 Gr. WCB
- 316 Stainless Steel ASTM A351 CF8M

### DISC:

- Cast Iron ASTM A126 Class B
- Nylon 11 Coated, Cast Iron ASTM A126 Class B
- ENP Cast Iron ASTM A126 Class B
- Ductile Iron ASTM A536 Gr. 65-45-12
- Nylon 11 Coated, Ductile Iron ASTM A536
- Aluminum Bronze ASTM B148 Alloy C95400
- 316 Stainless Steel ASTM A351 CF8M
- Hastelloy® C-276 ASTM B575 Alloy N10276

### SEAT:

- EPDM
- BUNA-N
- FKM*

### STEM:

- Carbon Steel, Coated
- 304 Stainless Steel ASTM A276 Type 304
- Hastelloy® C-276 ASTM B575 Alloy N10276

## $C_v$ VALUES-VALVE SIZING COEFFICIENT BRAY SERIES 32/33, 35/36

| Valve Size | | Disc Position (degrees) | | | | | | | | |
|---|---|---|---|---|---|---|---|---|---|---|
| ins | mm | 90º | 80º | 70º | 60º | 50º | 40º | 30º | 20º | 10º |
| 22 | 550 | 27,168 | 22,028 | 14,562 | 9,036 | 5,640 | 3,510 | 2,070 | 916 | 103 |
| 24 | 600 | 33,154 | 27,186 | 18,235 | 11,040 | 6,962 | 4,244 | 2,387 | 1,028 | 259 |
| 26 | 650 | 36,220 | 29,700 | 19,921 | 12,496 | 7,824 | 4,890 | 2,752 | 1,141 | 289 |
| 28 | 700 | 41,619 | 34,683 | 22,578 | 13,838 | 8,636 | 5,399 | 3,133 | 1,324 | 295 |
| 30 | 750 | 52,443 | 43,003 | 28,844 | 18,090 | 11,328 | 7,080 | 3,986 | 1,652 | 420 |
| 32 | 800 | 60,658 | 48,558 | 32,591 | 20,410 | 12,743 | 7,983 | 4,636 | 2,026 | 550 |
| 36 | 900 | 77,089 | 59,667 | 40,086 | 25,053 | 15,572 | 9,790 | 5,936 | 2,775 | 740 |
| 40 | 1000 | 90,175 | 73,990 | 50,406 | 30,636 | 19,307 | 11,862 | 6,925 | 2,971 | 757 |
| 42 | 1050 | 102,989 | 83,421 | 54,584 | 35,016 | 21,010 | 12,997 | 7,879 | 3,502 | 783 |
| 44 | 1100 | 112,960 | 87,430 | 58,740 | 36,712 | 22,818 | 14,346 | 8,698 | 4,066 | 904 |
| 48 | 1200 | 132,888 | 108,968 | 70,431 | 43,853 | 27,242 | 17,010 | 10,365 | 4,651 | 1,023 |
| 54 | 1400 | 168,700 | 138,334 | 89,411 | 55,671 | 34,583 | 21,594 | 13,158 | 5,904 | 1,299 |
| 60 | 1500 | 190,000 | 154,000 | 102,000 | 63,200 | 39,400 | 24,500 | 14,500 | 6,400 | 1,480 |
| 66 | 1650 | 211,000 | 171,000 | 113,000 | 70,200 | 43,800 | 27,300 | 16,100 | 7,110 | 1,650 |
| 72 | 1800 | 244,000 | 198,000 | 131,000 | 81,200 | 50,700 | 31,500 | 18,600 | 8,220 | 1,900 |

## INSTALLATION

Position the disc in the partially open position, maintaining the disc within the body face-to-face. Place the body between flanges and install flange bolts. Do not use flange gaskets. Before tightening flange bolts, carefully open the disc to the full open position to ensure proper alignment and clearance of the disc O.D. with the adjacent pipe I.D. Leave the disc in the full open position and tighten flange bolts per required specification. Once bolts are tightened, carefully rotate disc to closed position to ensure disc O.D. clearance.

## PRESSURE RATINGS

For bi-directional bubble tight shut off, disc in closed position.

Series 32 : 22”-36” 75 psig
Series 33 : 22”-36” 150 psig
Series 35 : 22”-72” 75 psig
Series 36 : 22”-72” 150 psig

All valves are factory tested to 110% of their specified pressure rating.

## TAPER PINS:

- 17-4 PH Stainless Steel ASTM A564 Type 630 Condition H900

### Packing:

- Buna-N

### Bearings:

- Luberized Bronze (Series 35/36)

### Bushing:

- Luberized Bronze (Series 32/33)

### Thrust Bearing:

- Bronze

## TEMPERATURE RANGE OF SEATS

| Type | Max | Min |
|---|---|---|
| EPDM | +250ºF (121ºC) | -40ºF (-40ºC) |
| Buna-N | +212ºF (100ºC) | 0ºF (-18ºC) |
| FKM* | +400ºF (204ºC) | 0ºF (-18ºC) |

For other seat types consult factory

*FKM is the ASTM D1418 designation for Fluorinated Hydrocarbon Elastomers (also called Fluoroelastomers.)
Hastelloy® is a registered trademark of Haynes International, Inc.

## COMPONENTS

| Item No. | Quantity | | Item Description |
|---|---|---|---|
| | S.32/33 | S.35/36 | |
| 1 | 1 | 1 | Body |
| 2 | 1 | 1 | Seat |
| 3 | 1 | 1 | Disc |
| 4 | 1 | 1 | Stem |
| 5 | 1 | 1 | Bottom Plate |
| 6 | 1 | 1 | Packing |
| 7 | - | 2 | Bearing |
| 8 | 2 | 2 | Taper Pin |
| 9 | 2 | 2 | O-ring |
| 10 | 2 | 2 | Nut |
| 11 | 2 | 2 | Lock Washer |
| 12 | 1 | 1 | Thrust Bearing |
| 13 | 1 | 1 | Gasket |
| 14 | 4 | 6 | Screw |
| 15 | 1 | 1 | Key |
| 16 | - | 1 | Packing Gland |
| 17 | 1 | 1 | Retainer |
| 18 | 1 | - | Bushing |

SERIES 32 / 33

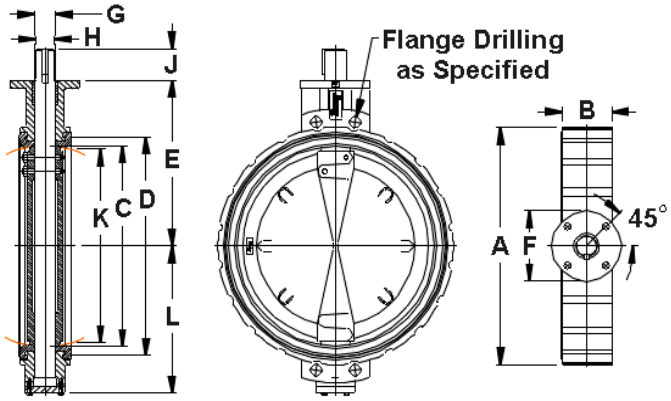


SERIES 35 / 36

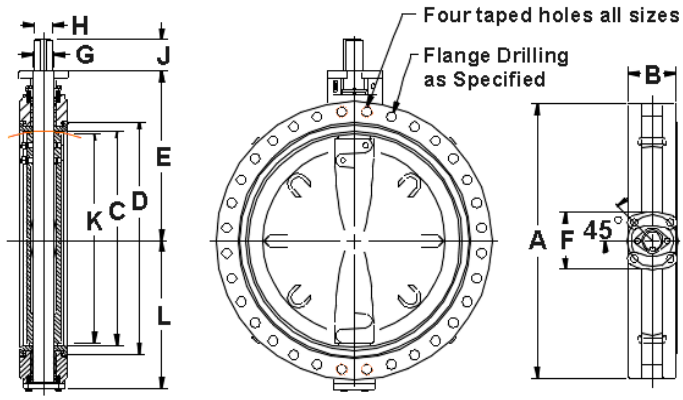


SERIES 32/33 Wafer*

| Valve Size | | | | | | | | Mtg. Flange Drig. | | | | SERIES 32 | | | | SERIES 33 | | | | | |
|---|---|---|---|---|---|---|---|---|---|---|---|---|---|---|---|---|---|---|---|---|---|
| ins | mm | A | B | C | D | E | F | PCD | No. Holes | Hole Dia. | G | H | J | Key Size | K | H | J | Key Size | K | L | Wt (lb.) |
| 22 | 550 | 25.50 | 6.06 | 21.25 | 24.06 | 20.12 | 8.27 | 6.50 | 4 | .81 | 2.50 | 2.50 | 4.00 | .62x.62 | 20.51 | 2.50 | 4.00 | .62x.62 | 20.56 | 16.50 | 400 |
| 24 | 600 | 27.94 | 5.94 | 23.25 | 25.75 | 19.50 | 8.27 | 6.50 | 4 | .81 | 2.50 | 2.50 | 4.00 | .62x.62 | 22.64 | 2.50 | 4.00 | .62x.62 | 22.69 | 17.56 | 420 |
| 26 | 650 | 29.36 | 6.50 | 24.46 | 27.83 | 21.83 | 11.81 | 10.00 | 8 | .75 | 2.50 | 2.50 | 4.00 | .62x.62 | 23.67 | 2.50 | 4.00 | .62x.62 | 23.71 | 18.83 | 540 |
| 28 | 700 | 31.34 | 6.50 | 26.59 | 29.76 | 22.82 | 11.81 | 10.00 | 8 | .75 | 2.50 | 2.50 | 4.00 | .62x.62 | 25.74 | 2.50 | 4.00 | .62x.62 | 25.78 | 19.28 | 580 |
| 30 | 750 | 34.19 | 6.56 | 29.25 | 32.00 | 23.00 | 8.27 | 6.50 | 4 | .81 | 3.00 | 2.50 | 4.00 | .62x.62 | 28.67 | 3.00 | 4.00 | .75x.75 | 28.73 | 20.81 | 660 |
| 32 | 800 | 35.555 | 7.48 | 30.39 | 33.70 | 26.37 | 11.81 | 10.00 | 8 | .75 | 3.00 | 2.50 | 4.00 | .62x.62 | 29.57 | 3.00 | 4.00 | .75x.75 | 29.61 | 21.88 | 785 |
| 36 | 900 | 40.69 | 7.88 | 35.25 | 38.25 | 27.75 | 10.75 | 8.50 | 4 | 1.25 | 3.50 | 3.00 | 4.00 | .75x.75 | 34.54 | 3.50 | 5.25 | .88x.62 | 34.60 | 24.94 | 1025 |

SERIES 35/36 Double Flanged*

| Valve Size | | | | | | | | Mtg. Flange Drig. | | | | SERIES 35 | | | | SERIES 36 | | | | | |
|---|---|---|---|---|---|---|---|---|---|---|---|---|---|---|---|---|---|---|---|---|---|
| ins | mm | A | B | C | D | E | F | PCD | No. Holes | Hole Dia. | G | H | J | Key Size | K | H | J | Key Size | K | L | Wt (lb.) |
| 22 | 550 | 29.50 | 6.06 | 21.25 | 24.06 | 20.12 | 8.27 | 6.50 | 4 | .81 | 2.50 | 2.50 | 4.00 | .62x.62 | 20.51 | 2.50 | 4.00 | .62x.62 | 20.56 | 16.50 | 475 |
| 24 | 600 | 33.25 | 5.94 | 23.25 | 25.75 | 19.50 | 8.27 | 6.50 | 4 | .81 | 2.50 | 2.50 | 4.00 | .62x.62 | 22.64 | 2.50 | 4.00 | .62x.62 | 22.69 | 17.56 | 500 |
| 26 | 650 | 35.75 | 6.50 | 24.46 | 27.83 | 21.83 | 11.81 | 10.00 | 8 | .75 | 2.50 | 2.50 | 4.00 | .62x.62 | 23.67 | 2.50 | 4.00 | .62x.62 | 23.71 | 18.83 | 675 |
| 28 | 700 | 37.80 | 6.50 | 26.59 | 29.76 | 22.82 | 11.81 | 10.00 | 8 | .75 | 2.50 | 2.50 | 4.00 | .62x.62 | 25.74 | 2.50 | 4.00 | .62x.62 | 25.78 | 19.78 | 735 |
| 30 | 750 | 38.75 | 6.56 | 29.25 | 32.00 | 23.00 | 8.27 | 6.50 | 4 | .81 | 3.00 | 2.50 | 4.00 | .62x.62 | 28.67 | 3.00 | 4.00 | .75x.75 | 28.73 | 20.81 | 855 |
| 32 | 800 | 41.75 | 7.48 | 30.39 | 33.70 | 26.37 | 11.81 | 10.00 | 8 | .75 | 3.00 | 2.50 | 4.00 | .62x.62 | 29.57 | 3.00 | 4.00 | .75x.75 | 29.61 | 21.88 | 1010 |
| 36 | 900 | 46.00 | 7.88 | 35.25 | 38.25 | 27.75 | 9.50 | 8.50 | 4 | 1.25 | 3.50 | 3.00 | 4.00 | .75x.75 | 34.54 | 3.50 | 5.25 | .88x.62 | 34.60 | 24.94 | 1320 |
| 40 | 1000 | 50.75 | 8.50 | 38.37 | 41.58 | 30.78 | 13.78 | 11.73 | 8 | .81 | 4.00 | 3.50 | 5.25 | .88x.62 | 37.45 | 4.00 | 5.25 | 1.0x.75 | 37.49 | 26.56 | 2140 |
| 42 | 1050 | 53.00 | 9.88 | 41.25 | 44.25 | 32.00 | 9.50 | 8.50 | 4 | 1.25 | 4.00 | 3.50 | 5.25 | .88x.62 | 40.20 | 4.00 | 5.25 | 1.0x.75 | 40.25 | 27.81 | 2550 |
| 44 | 1100 | 55.25 | 9.88 | 43.25 | 46.25 | 33.12 | 13.78 | 11.73 | 8 | .81 | 4.00 | 3.50 | 5.25 | .88x.62 | 42.20 | 4.00 | 5.25 | 1.0x.75 | 42.25 | 29.06 | 2800 |
| 48 | 1200 | 59.50 | 10.88 | 47.25 | 50.62 | 36.00 | 10.75 | 8.50 | 4 | 1.25 | 5.00 | 4.00 | 5.25 | 1.0x.75 | 46.13 | 5.00 | 6.00 | 1.25x.88 | 46.18 | 31.06 | 3200 |
| 54 | 1400 | 69.00 | 15.36 | 54.12 | 57.50 | 40.62 | 13.78 | 11.73 | 8 | .81 | 6.00 | 5.00 | 5.25 | 1.25x.88 | 51.88 | - | - | - | - | 37.19 | 6000 |
| 54 | 1400 | 69.00 | 15.36 | 54.12 | 57.50 | 40.62 | 16.34 | 14.02 | 8 | 1.30 | 6.00 | - | - | - | - | 6.00 | 6.50 | 1.50x1.0 | 51.88 | 37.19 | 6000 |
| 60^ | 1500 | 73.00 | 15.00 | 59.25 | 63.88 | 42.62 | 16.34 | 14.02 | 8 | 1.30 | 7.00 | 6.00 | 6.50 | 1.5x1.0 | 57.51 | - | - | - | - | 40.88 | 7000 |
| 60^ | 1500 | 73.00 | 15.00 | 59.25 | 63.88 | 42.62 | 18.70 | 15.98 | 8 | 1.56 | 7.00 | - | - | - | - | 7.00 | 6.50 | 1.75x1.5 | 57.56 | 40.88 | 7000 |
| 66 | 1650 | 80.00 | 18.00 | 65.14 | 69.89 | 48.62 | 16.34 | 14.02 | 8 | 1.30 | 7.00 | 6.00 | 6.50 | 1.5x1.0 | 62.91 | - | - | - | - | 44.56 | 8000 |
| 66 | 1650 | 80.00 | 18.00 | 65.14 | 69.89 | 48.62 | 18.70 | 15.98 | 8 | 1.56 | 7.00 | - | - | - | - | 7.00 | 6.50 | 1.75x1.5 | 62.98 | 44.56 | 8000 |
| 72 | 1800 | 86.50 | 18.00 | 69.24 | 73.75 | 52.25 | 18.70 | 15.98 | 8 | 1.56 | 8.50 | 7.50 | 8.00 | 1.75x1.5 | 67.03 | - | - | - | - | 47.44 | 11250 |
| 72 | 1800 | 86.50 | 18.00 | 69.24 | 73.75 | 52.25 | 22.05 | 19.02 | 12 | 1.56 | 8.50 | - | - | - | - | 8.50 | 10.00 | 2.0x1.5 | 67.08 | 47.44 | 11250 |

* Dimensions for the Series 36 valve are the same except for a larger key Size, H, J and K dimension. Dimensions for the 46" and 54"-72" Series 35 and Series 36 valevs differ and are listed separately.
^ Dimesions are for reference only. Consult factory for exact dimensions. Bray reserves the right to change product dimensions without notice.

All statements, technical information, and recommendations in this bulletin are for general use only. Consult Bray representatives or factory for the specific requirements and material selection for your intended application. The right to change or modify product design or product without prior notice is reserved.
Patents applied for in U.S. and foreign countries. Bray® is a registered trademark of BRAY INTERNATIONAL., Inc.

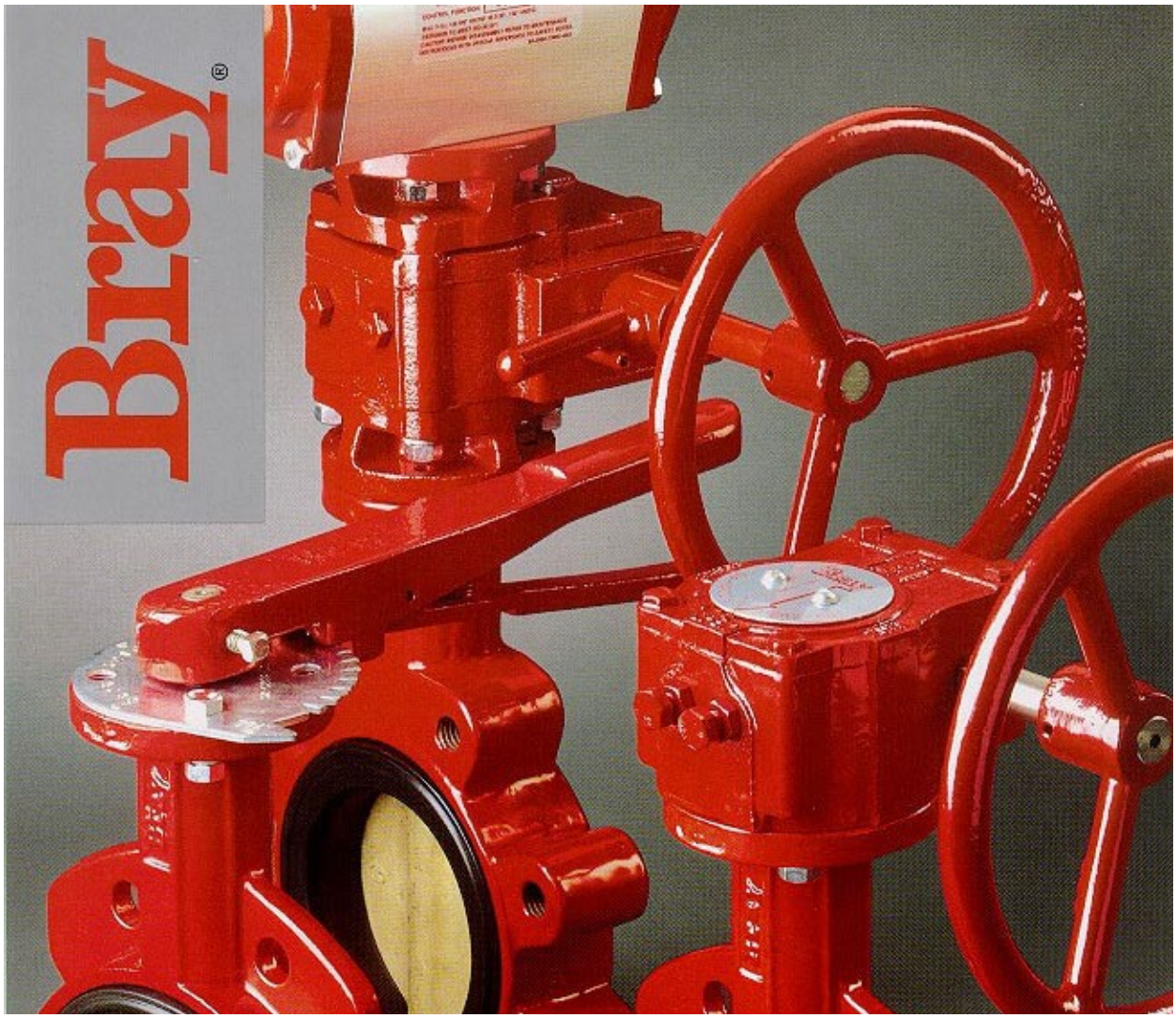


# Manual Operators

**Handle / Gear Operator / S.S. Gear Operator / Declutchable Gear Operator**

**Series 1: 1"-12" (25mm-300mm)**
**Series 4: 2"-54" (50mm-1400mm)**
**Series 4 Stainless Steel: 1"-16" (25mm-400mm)**
**Series 5: 2"-36" (50mm-900mm)**

Bray Controls proudly offers four operators for manual control of valve position. All manual operators mount directly to Bray valves, and all are epoxy coated for excellent corrosion, abrasion and impact resistance.

## SERIES 1 HANDLE & NOTCH PLATE

Bray offers two handles for on-off and throttling service - one for resilient seated valves from 1”-12" (25mm-300mm), and a high torque handle for high pressure valves from 2 ½”-8” (65mm-200mm). These quarter turn handles have a locking spring and a directional pointer for valve disc position indication. Bolted notch plates are offered. For resilient seated valves a 10 position plate is standard. For high pressure valves an 8 position plate is standard. Both contain on-off stops to prevent over rotation of the valve. Optionally available are an infinite position plate, a 180° notch plate, a memory stop, a padlock kit, and a 2” square nut version.

## SERIES 4 GEAR OPERATOR

For heavy duty on-off and throttling service of 2”-54” (50mm-1400mm) valves, the Series 4 is self lubricated for smooth, trouble-free operation. The rugged, cast iron body with O-ring body seals is weatherproof to IP65. A self-locking worm and worm gear drive holds the valve in the desired position. Features include a readily accessible handwheel, a valve position indicator and mechanical travel stops which permit field adjustment of valve movement to specific degrees of rotation. Optionally available are chainwheel accessories, padlock kits and 2” square nut versions. A Gear Operator with a Stainless Steel housing is also available for valve sizes 1”-16”.

## SERIES 4 STAINLESS STEEL GEAR OPERATOR

Bray Controls is proud to introduce the Series 4 quarter-turn stainless steel gear operator for manual control of valve position. The weatherproof stainless steel housing is ideal for applications in highly corrosive environments as well as in breweries, pharmaceutical and sanitary industries.

## SERIES 5 DECLUTCHABLE GEAR OPERATOR

Available for 2”-36” (50mm-900mm) valves, the Series 5 offers the same superior features as the Series 4 gear operator with the added ability to manually override pneumatic actuators or rotate the valve when air pressure is not available. This operator is excellent for the safe handling of spring return actuators. During pneumatic operation, the worm of the gear unit is disengaged. Should the valve require opening or closing in the event of power loss, manual rotation of the declutch lever will provide a camming action and engage the worm to the segmented worm gear, allowing rotation of the valve using the handwheel. The Series 5 can be installed in the filed with existing Bray pneumatic actuators.

The
High
Performance
Company

Standard 10 Position Notch Plate
has been designed to lock the handle securely in place, preventing position change of disc due to line pressure, vibration or shock. *Standard 8 Position Plate for high pressure valves is not shown*.

Infinite Position Notch Plate
for throttling applications, allows for very precise adjustments of valve disc positioning anywhere from 0° to 90°. Positioning is simply a matter of loosening the set knob, moving the handle, then retightening the knob. *For resilient seated valves only.*

Handle and 180° Notch Plate
allows the operator to switch the handle to either side without removing the notch plate from the valve.

Memory Stop
allows the operator to set the maximum amount the valve can open. When set, this limit will remain fixed until the stop is reset.

Padlock Kit
allows the customer to lock the valve in the full open or closed position, tamper proofing the valve. By drilling a new hole in the top plate, the handle can be locked in mid travel.

2" Square nut
is used where the valve is buried under the surface. To rotate valve disc position, the nut is reached with a T handle wrench.

Chainwheel for remote access to valve positioning when the handwheel is not accessible, such as valves positioned high out of reach.
A Padlock Kit and a 2" Square Nut version for buried service are also available with the Series 4 *(not shown)*.

Operation Any residual air pressure in the pneumatic actuator must be vented before operation of the Declutchable Gear Operator. Bray recommends the use of a vent valve to block the incoming air supply and vent residual air. Then engage the declutching lever and rotate the valve using the handwheel. When returning to automatic operation, disengage the manual override by rotating the declutching lever, turning the vent valve to off, then restoring air pressure to the actuator.

SERIES 04 STAINLESS STEEL
FEATURES
For on-off and throttling service of 1"-16" (25mm-400mm) butterfly valves. Torque range is 1,100 to 8,800 lb-in. The self-locking worm and worm gear drive holds the valve in the desired position. Features include an aluminum or stainless steel handwheel, a valve position indicator and mechanical travel stops that permit field adjustment of valve movement to specific degrees of rotation. Offered with a double "D" connection for 1"-12" valves and keyway for 14"-16" valves. Additionally, the Series 4 mounts directly to Bray valves, no brackets or adapters are required.

Bray® CONTROLS

A Subsidiary of BRAY INTERNATIONAL, INC.
13333 Westland East Blvd.,Houston, Texas 77041
Phone: 281.894.5454 Fax: 281.894.9499
©1995 Bray International. All rights reserved

*ATTENTION*
THIS DOCUMENT IS VALID IF AND ONLY IF YOU PERSONALLY DOWNLOADED IT FROM WWW.BRAY.COM
IF YOU RECEIVED THIS DOCUMENT FROM ANY OTHER SOURCE, PLEASE TAKE INTO CONSIDERATION THAT ALTERATIONS
COULD HAVE BEEN MADE. FOR AN ORIGINAL COPY, PLEASE CONTACT BRAY VALVE AT 281-894-5454

**SERIES 04**
**ES-0136**
**Date: March 1997**

| Size | RATIO | A | B | C | D | E | F | G | H | J | K | L | M (Mounting Hole Pattern) BC | No. of Holes | Threads UNC-2B | Depth | WT (lbs.) |
|---|---|---|---|---|---|---|---|---|---|---|---|---|---|---|---|---|---|
| 0200 | 20:1 | 4.53 | 3.50 | 2.56 | 4.72 | 1.62 | 1.75 | 1.44 | .63 | .75 | .51 | --- | 2.76 | 4 | .31-18 | .50 | 9.8 |
| 0300 | 30:1 | 6.89 | 5.91 | 2.50 | 6.87 | 2.62 | 2.95 | 1.25 | .75 | 1.18 | .87 | --- | 4.92 | 4 | .50-13 | .63 | 15.8 |
| 0300 | 30:1 | 6.89 | 5.91 | 2.50 | 6.87 | 2.62 | 2.95 | 1.25 | .75 | 1.38 | --- | .39x.39 | 4.92 | 4 | .50-13 | .63 | 15.8 |
| 0500 | 50:1 | 7.53 | 5.91 | 3.28 | 11.00 | 3.12 | 2.95 | 1.69 | .75 | 1.38 | --- | .39x.39 | 4.92 | 4 | .50-13 | .75 | 29.0 |
| 0800 | 80:1 | 10.51 | 8.27 | 4.39 | 14.00 | 4.56 | 4.14 | 2.38 | 1.00 | 1.97 | --- | .47x.39 | 6.50 | 4 | .75-10 | 1.00 | 62.5 |
| 0800 | 80:1 | 10.51 | 8.27 | 4.39 | 14.00 | 4.56 | 4.14 | 2.38 | 1.00 | 2.50 | --- | .62x.62 | 6.50 | 4 | .75-10 | 1.00 | 69.8 |

| Size | N STD | N OPT | P STD | P OPT | R | øS | Torque (lb.in.) | Adaptor Code |
|---|---|---|---|---|---|---|---|---|
| 0200 | 5.34 | – | 8 | – | 1.25 | .156 | 2,000 | A1,B1,C0 |
| 0300 | 7.50 | 7.69 | 8 | 12 | 1.25 | .156 | 8,000 | EO |
| 0300 | 7.50 | 7.69 | 8 | 12 | 1.25 | .156 | 8,000 | FO |
| 0500 | 11.81 | – | 12 | – | 1.62 | .188 | 13,000 | FO |
| 0800 | 14.81 | 14.88 | 12 | 18 | 1.62 | .188 | 24,000 | GO |
| 0800 | 14.88 | – | 18 | – | 1.50 | .250 | 24,000 | HO |

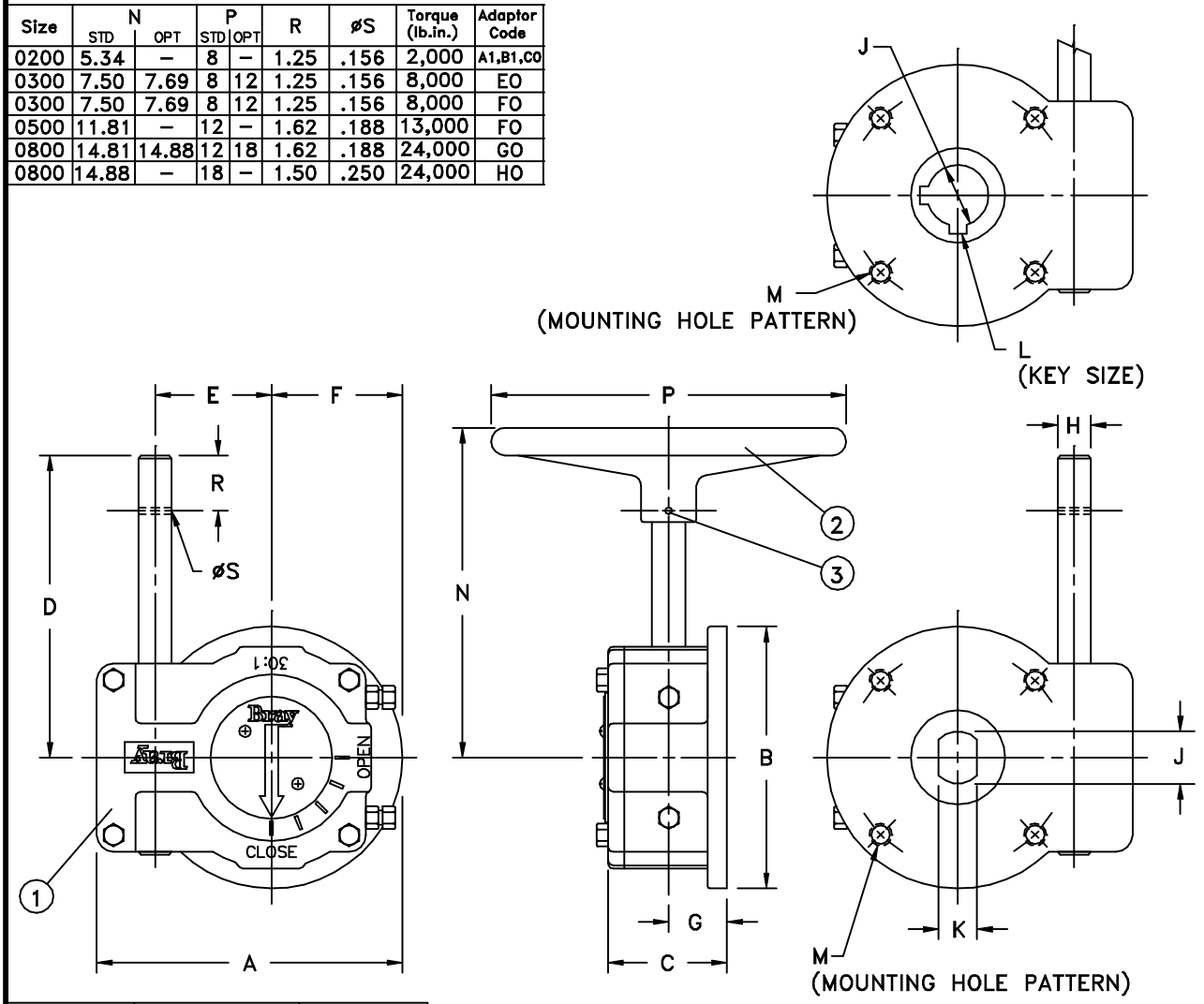


| ITEM No. | NAME | No. REQUIRED |
|---|---|---|
| 3 | ROLL PIN | 1 |
| 2 | HANDWHEEL | 1 |
| 1 | OPERATOR | 1 |

Customer/Project _____
Inq./P.O. No. _____
Bray Order No. _____
Certified Correct By _____ Date _____

The High Performance Company
BRAY VALVE & CONTROLS
A Division of BRAY INTERNATIONAL, Inc.

DIMENSIONS (Inches)
GEAR OPERATOR, SERIES 04
SIZE 0200-0800

| Series | Size | Part No. | Material Trim Code | Drawing No. |
|---|---|---|---|---|
| | | | | ES-0136 |

Bray

REV. 3/ ERN 3586

# Nylon 11 Coatings
# Physical / Chemical Resistance Properties

The general physical properties of Nylon 11 coatings properly applied with primer and temperature are as follows:

| | |
|---|---|
| **Melting Point** | 363-367°F<br>(irrespective of type of powder) |
| **Specific Gravity** at 68°F<br>Coating in natural powders<br>Coating in fine powder, white<br>Coating in ES powder, white | <br>0.0376 lb/in$^3$<br>0.0385 lb/in$^3$<br>0.0403 lb/in$^3$ |
| **Solubility**<br>Solvent for tests and analysis<br><br>Solvent for stripping | <br>metacresol; sulphuric acid, formic acid, alcohol-phenol mixtures<br>Inpro CL, Turco 5061 |
| **Water absorption to saturation**<br>At 68°F and 65% RH<br>At 68°F and 100% RH<br>At 212°F and 100% RH (boiling water) | <br>0.9 to 1.1% (1 according)<br>1.6 to 1.9% (1 to the type)<br>2.4 to 3.0% (1 of powder) |
| **Shore D hardness** at 68°F, measured at a thickness greater than 0.2 inches to eliminate the influence of the substrate | 75 |
| **Hardness** measured with a Persoz pendulum at 68°F (AFNORT 30-016) | 190 |
| **Rockwell hardness**, R scale, ASTM D 785 at 68°F measured at a thickness greater than 0.2 inches to eliminate the influence of the substrate | 106 |
| **Surface hardness** according to DIN 53-456 at 68°F 10 sec. under load | 11,600 PSI |
| **Scratch resistance** measured with the Clemen apparatus; load necessary to introduce a scratch which reaches the underlying metal for a coating of 0.016 inch thickness | 13.3 lbf |
| **Shear strength**, ASTM D 732 | 5076-6092 PSI |
| **Impact resistance**<br>Projectile with hemi-spherical head, 0.98 inches diameter, weighing 4.41 lbf., falling from height of 19.7 inches, horizontal coating 0.01 inches thick | <br>Excellent<br>no fracture of the coating and metal not bared after impact |

All information herein is proprietary and confidential and may not be copied or reproduced without the expressed written consent of BRAY INTERNATIONAL, Inc.

| | |
|---|---|
| **Impact resistance (cont.)**<br>ATO test; cylindrical bar, 0.98 inches diameter, weighing 4.72 lbf, falling from 5.12 inches on to a coating 0.01 inches thick applied to a tubular substrate at a rate of 30 impacts per minute | After 4,000 impacts the coating is not fractured; the tubular substrate is deformed and the coating develops a matt finish |
| **Abrasion resistance**<br>Taber abrasimeter (wheel type CS 17, load 2.21 lbf)<br>loss of weight after 1,000 turns<br>coefficient of friction | Excellent<br>1.76 to 2.82 x $10^{-4}$ oz.<br><br>0.10 – 0.30 (according to test conditions) |
| **Tensile strength** ASTM D 638 (Measured on a Stripped coating)<br>Tensile strength at yield<br>Elongation at yield<br>Tensile strength at break | <br>4496-4786 PSI<br>18-24%<br>5656-6817 PSI |
| **Specific heat** | 0.499 btu/lb °F |
| **Thermal conductivity** | 2.01 btu in/ft$^2$h°F<br>Between 323 and 443°K (122 & 338°F) |
| **Latent heat of fusion** | 35.98 btu/lb |
| **Coefficient of linear expansion** ASTM D 696 | 5.055 x $10^{-5}$ / °F (-22 to 104°F)<br>8.33 x $10^{-5}$ / °F (104 to 248°F) |
| **Inflammability** ATM D 635 (measured at a Thickness greater than 0.12 inches to eliminate the influence of the substrate) | self-extinguishing |
| **Transverse of volume resistivity**<br>ASTM D 257 at 68°F and 65% RH at 500V | 8.89 x $10^{14}$ohms / in$^2$ / in |
| **Surface resistivity**<br>ASTM D 257 at 68°F and 65% RH at 500V | 2.4 x $10^{14}$ohms |
| **Dielectric constant**<br>$10^2$Hz<br>$10^6$Hz | <br>3.9<br>3.1 |
| **Tangent of the angle of loss (power factor)** at 68°F and 65% RH at 1,000 V R.M.S. with a current of 1,000 Hz | 0.05 |
| **Resistance to surface tracking**<br>DIN 53-480, KA method | Grade KA3c |

All information herein is proprietary and confidential and may not be copied or reproduced without the expressed written consent of BRAY INTERNATIONAL, Inc.

| | |
|---|---|
| **Dielectric strength** measured at 68°F and 65% RH | |
| Influence of the thickness studied on a natural coating: | |
| 0.008 in. | 1.34 KV / .001 in. |
| 0.017 in. | 0.98 KV / .001 in. |
| 0.028 in. | 0.88 KV / .001 in. |
| 0.035 in. | 0.84 KV / .001 in. |
| Influence of color (pigments and colorants) studied at a thickness of 0.016 in. | |
| Natural | 0.99 KV / .001 in. |
| grey 49 | 0.775 KV / .001 in. |
| red 16 | 0.767 KV / .001 in. |
| black 26 | 0.288 KV / .001 in. |
| | NOTE: From the point of view of electric insulation, the coating is completely satisfactory when its dielectric strength exceeds 0.457 KV / .001 in. |
| **Resistance to boiling water** | Excellent adhesion after 2,000 hours; with a special surface preparation this adhesion will be sustained for much longer; consult us for further details |
| **Resistance to outdoor exposure And Ultra-Violet radiation** | Very good in white, black Y and pastel-colored coatings Bray's red color is not subject to UV deterioration (chalking or cracking) |
| **Resistance to salt spray** | No corrosion after 2,000 hours exposure (ASTM B117 or AFNOR X 41-002) |
| **Resistance to sea water** | No corrosion after 10 years exposure |

CHEMICAL PROPERTIES OF THE COATING

In general, Nylon 11 coatings have good resistance to inorganic salts, alkalis, most solvents and to organic acids. Greater caution must be observed in uses involving inorganic acids, phenols and certain chlorinated solvents. In such cases, it is advisable to consult Bray Inside Sales Department, specifying the practical problem involved; e.g. the temperature and chemical composition of the liquid or gas. Practical tests have shown that Nylon 11 coatings have excellent resistance to chemical solutions provided the material coated is properly prepared.

The following is a summary of Nylon 11 resistance to various chemicals, as a function of temperature.

A – Recommended, generally little or minor effect based on valve usage experience and recommendations from suppliers.

B – May sometimes be used depending on the conditions of application such as concentration and temperature. Testing is recommended before full scale usage.

N – Not recommended for usage.

BLANK – Insufficient evidence available.

All information herein is proprietary and confidential and may not be copied or reproduced without the expressed written consent of BRAY INTERNATIONAL, Inc.

| | Concentration | 68°F | 104°F | 140°F | 194°F |
|---|---|---|---|---|---|
| **Inorganic bases** | | | | | |
| Ammonia | Liquid or gas | A | A | | |
| Ammonium hydroxide | Concentrated | A | A | A | A |
| Potassium hydroxide | 50% | A | B | N | N |
| Sodium hydroxide | 5% | A | A | B | |
| Sodium hydroxide | 10% | A | B | B | |
| Sodium hydroxide | 50% | A | B | N | N |
| **Inorganic acids** | | | | | |
| Chromic acid | 10% | N | N | N | N |
| Hydrochloric acid | 1% | A | B | N | N |
| Hydrochloric acid | 10% | A | B | N | N |
| Nitric acid | all concentrations | N | N | N | N |
| Phosphoric acid | 50% | A | B | N | N |
| Sulfur trioxide | | B | N | N | N |
| Sulfuric acid | 1% | A | B | B | N |
| Sulfuric acid | 10% | A | B | N | N |
| **Inorganic salts** | | | | | |
| Alum | Concentrated solutions | A | A | A | |
| Aluminum sulfate | Or slurries | A | A | A | A |
| Ammonium nitrate | “ | A | A | A | |
| Ammonium sulfate | “ | N | A | B | |
| Barium chloride | “ | A | A | A | A |
| Calcium arsenate | “ | A | A | A | |
| Calcium chloride | ” | A | A | A | A |
| Calcium sulfate | ” | A | A | B | |
| Copper sulfate | “ | A | A | A | A |
| Diammonium phosphate | “ | A | A | B | |
| Magnesium chloride | 50% | A | A | A | A |
| Potassium ferrocyanide | concentrated sclutions | A | A | A | |
| Potassium nitrate | or slurries | A | B | N | N |
| Potassium sulfate | “ | A | A | A | A |
| Sodium silicate | “ | A | A | A | A |
| Sodium sulfide | “ | A | B | B | |
| Sodium carbonate | “ | A | A | B | N |
| Sodium chloride | saturated concentrated | A | A | A | A |
| Trisodium phosphate | solutions or slurries | A | A | A | A |
| **Other inorganic products** | | | | | |
| Agricultural sprays | | A | A | | |
| Bleach solution | | B | N | N | N |
| Bromine | | N | N | | |
| Chlorine | | N | N | N | N |
| Fluorine | | N | N | N | N |
| Hydrogen | | A | A | A | A |
| Hydrogen peroxide | 20 vol. | A | B | | |
| Mercury | | A | A | A | A |
| Oxygen | | A | A | B | N |
| Ozone | | B | N | N | N |
| Potassium permanganate | 5% | N | N | | |
| Sea water | | A | A | A | A |
| Soda water | | A | A | A | A |
| sulfur | | A | A | | |

All information herein is proprietary and confidential and may not be copied or reproduced without the expressed written consent of BRAY INTERNATIONAL, Inc.

| | Concentration | 68°F | 104°F | 140°F | 194°F |
|---|---|---|---|---|---|
| **Other inorganic products (cont'd)** | | | | | |
| Water | | A | A | A | A |
| **Organic bases** | | | | | |
| Aniline | Pure | B | N | N | N |
| Diethanolamine | 20% | A | A | A | B |
| Pyridine | Pure | B | N | N | N |
| Urea | | A | A | B | B |
| **Organic acids and anhydrides** | | | | | |
| Acetic acid | | B | N | N | N |
| Acetic anhydride | | B | N | N | N |
| Citric acid | | A | A | B | N |
| Formic acid | | N | N | N | N |
| Lactic acid | | A | A | A | B |
| Oleic acid | | A | A | A | B |
| Oxalic acid | | A | A | B | N |
| Picric acid | | B | N | N | N |
| Stearic acid | | A | A | A | B |
| Tartaric acid | Saturated solution | A | A | A | B |
| Uric acid | | A | A | A | B |
| **Hydrocarbons** | | | | | |
| Acetylene | | A | A | A | |
| Benzene | | A | A | B | |
| Butane | | A | A | A | |
| Cyclohexane | | A | A | B | |
| Decalin | | A | A | A | B |
| Freon 12 | | A | | | |
| Freon 22 | | A | | | |
| Hexane | | A | A | A | |
| Methane | | A | A | A | |
| Naphthalene | | A | A | A | B |
| Propane | | A | A | A | |
| Styrene | | A | A | | |
| Tolunene | | A | A | B | B |
| xylene | | A | A | B | B |
| **Alcohols** | | | | | |
| Benzyl alcohol | | | | | |
| Butanol | | | | | |
| Ethanol | | | | | |
| Glycerine | | | | | |
| Glycol | | | | | |
| Methanol | | | | | |
| **Aldehydes and Ketones** | | | | | |
| Acetaldehyde | | A | B | B | |
| Acetone | Pure | A | A | B | N |
| Benzaldehyde | | A | B | N | |
| Cyclohexanone | | A | B | N | |
| Formaldehyde | Technical | A | B | N | |
| Methylethylketone | | A | A | B | N |
| Methylisobutylketone | | A | A | B | N |

All information herein is proprietary and confidential and may not be copied or reproduced without the expressed written consent of BRAY INTERNATIONAL, Inc.

| | Concentration | 68°F | 104°F | 140°F | 194°F |
|---|---|---|---|---|---|
| **Chlorinated solvents** | | | | | |
| Carbon tetrachloride | | N | | | |
| Methyl bromide | | A | N | | |
| Methyl chloride | | A | N | | |
| Perchlorethylene | | A | A | B | |
| Trichlorethane | | B | N | | |
| Trichlorethylene | | A | B | | |
| **Phenols** | | N | N | N | N |
| **Salts, Esters, Ethers** | | | | | |
| Amyl acetate | | A | A | A | B |
| Butyl acetate | | A | A | A | B |
| Diethyl ether | | A | | | |
| Dioctylphosphate | | A | A | A | B |
| Diotylphthalate | | A | A | A | |
| Ethyl acetate | | A | A | A | |
| Fatty acid esters | | A | A | A | A |
| Methyl acetate | | A | A | A | |
| Methyl sulfate | | A | B | | |
| Tributylphosphate | | A | A | A | B |
| Tricresylphosphate | | A | A | A | B |
| **Various organic compounds** | | | | | |
| Anethole | | A | | | |
| Carbon disulphide | | A | B | N | |
| Diacetone alcohol | | A | A | B | N |
| Dimethyl formamide | | A | A | B | |
| Ethylene chlorhydrin | | N | N | | |
| Ethylene oxide | | A | A | B | N |
| Furfurol | | A | A | B | N |
| Glucose | | A | A | A | A |
| Tetraethyl lead | | A | | | |
| Tetrahydrofurane | | A | A | B | |
| **Various products** | | | | | |
| Beer | | A | | | |
| Cider | | A | | | |
| Crude petroleum | | A | A | A | |
| Diesel fuel | | A | A | A | |
| Fruit juices | | A | A | | |
| Fuel oil | | A | A | A | A |
| Greases | | A | A | A | A |
| Ground-nut oil | | A | A | | |
| High octane petrol | | A | A | A | |
| Kerosene (paraffin) | | A | A | A | |
| Linseed cake | | A | A | A | A |
| Milk | | A | A | A | A |
| Mustard | | A | | | |
| Normal petrol | | A | A | A | |
| Oils | | A | A | A | A |
| Sea water | | A | A | A | |
| Sewer gas | | A | A | | |
| Soap solution | | A | | | |

All information herein is proprietary and confidential and may not be copied or reproduced without the expressed written consent of BRAY INTERNATIONAL, Inc.

| | Concentration | 68°F | 104°F | 140°F | 194°F |
|---|---|---|---|---|---|
| **Various Products (cont'd)** | | | | | |
| Solutions or emulsions of: | | | | | |
| 2.4 – D | Agricultural sprays | A | | | |
| D.D.T. or Lindane | Agricultural sprays | A | | | |
| Hydroxy-quinoline | Agricultural sprays | A | | | |
| Solvent naphtha | | A | A | A | |
| Stearin | | A | A | A | |
| Turpentine | | A | A | A | |
| Vinegar | | A | | | |
| Wine | | A | | | |

All information herein is proprietary and confidential and may not be copied or reproduced without the expressed written consent of BRAY INTERNATIONAL, Inc.

The High Performance Company

Bray®

**SERIES 30/31** Wafer/Lug
2" - 20" (50mm-500mm)

# BUTTERFLY VALVES
RESILIENT SEATED

CELEBRATING 20 YEARS

The High Performance Company

# SERIES 30

**2"–20" (50mm–500mm)**
Bray® Controls is proud to offer a high quality line of butterfly valves to meet the requirements of today's market. Combining years of field application experience, research and development, Bray has designed many unique features in the Series 30/31 not previously available. The results are longer service life, greater reliability, ease of parts replacement and interchangeability of components.

**DISC AND STEM CONNECTION** (**A**) Features a high-strength through stem design. The close tolerance, double "D" connection that drives the valve disc is an exclusive feature of the Bray valve. It eliminates stem retention components being exposed to the line media, such as disc screws and taper pins, which commonly result in leak paths, corrosion, and vibration failures. Disc screws or taper pins, due to wear and corrosion, often

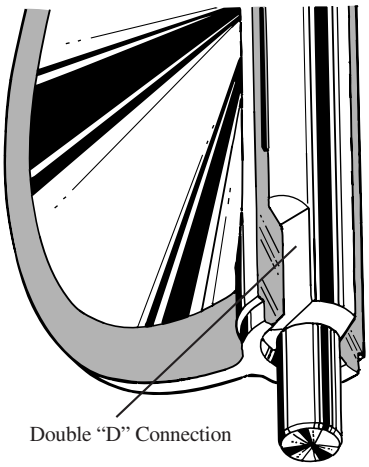


require difficult machining for disassembly. Disassembly of the Bray stem is just a matter of pulling the stem out of the disc. Without fasteners obstructing the line flow, the Series 30/31 $C_V$ values are higher than many other valves, turbulence is reduced, and pressure recovery is increased. The stem ends and top mounting flange are standardized for interchangeability with Bray actuators.

**DISC** (**B**) Casting is spherically machined and hand polished to provide a bubble-tight shut off, minimum torque, and longer seat life. The disc O.D. clearance is designed to work with all standard piping.

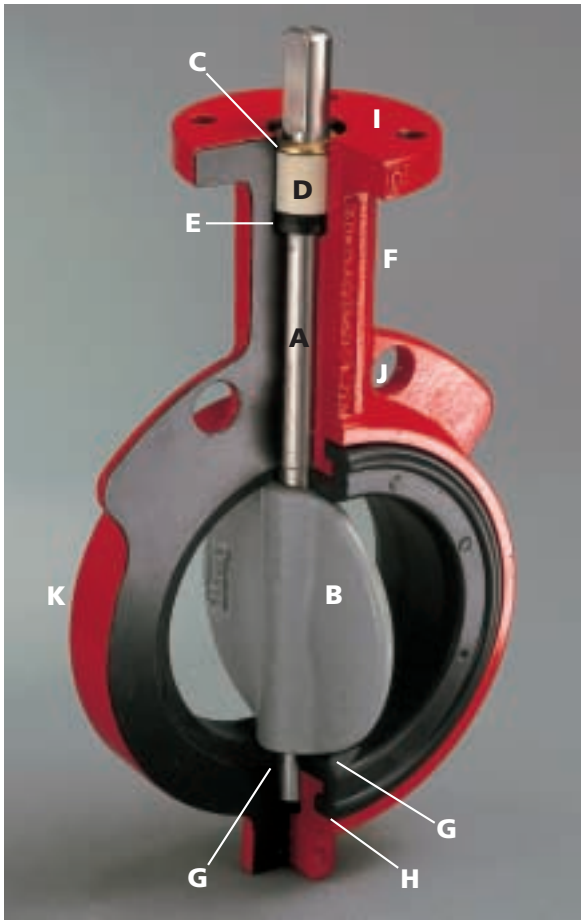


**STEM RETAINING ASSEMBLY** (**C**) The stem is retained in the body by means of a unique Stainless Steel "Spirolox®" retaining ring, a thrust washer and two C-rings, manufactured from brass as standard, stainless steel upon request. The retaining ring may be easily removed with a standard hand tool. The stem retaining assembly prevents unintentional removal of the stem during field service.

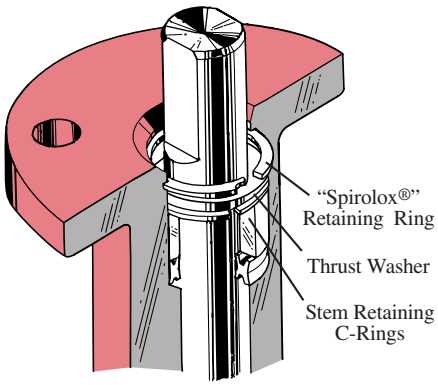


**STEM BUSHING** (**D**) Non-corrosive, heavy duty acetal bushing absorbs actuator side thrusts.

**STEM SEAL** (**E**) Double "U" cup seal design is self-adjusting and gives positive sealing in both directions. Prevents external substances from entering the stem bore.

**NECK** (**F**) Extended neck length allows for 2" of piping insulation and is easily accessible for mounting actuators.

**PRIMARY AND SECONDARY SEALS** (**G**) The Primary Seal is achieved by an interference fit of the molded seat flat with the disc hub. The Secondary Seal is created because the stem diameter is greater than the diameter of the seat stem hole. These seals prevent line media from coming in contact with the stem or body.

**BRAY UNIQUE SEAT DESIGN** (**H**) One of the valve's key elements is Bray's unique *tongue and groove* seat design. This resilient seat features lower torque than many valves on the market today and provides complete isolation of flowing media from the body. The tongue-and-groove seat to body retention method is superior to traditional designs, making field replacement simple and fast. The seat is specifically designed to seal with slip-on or weld-neck flanges. The seat features a molded O-ring which eliminates the use of flange gaskets. An important maintenance feature is

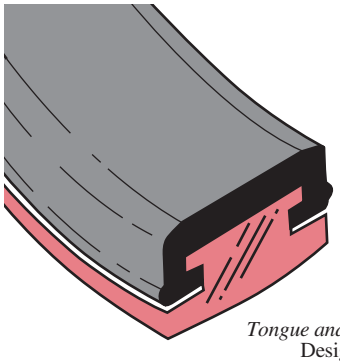

*Tongue and Groove* Design

*"Spirolox®" designation is a registered trademark of Kaydon Ring and Seal, Inc.

that all resilient seats for Bray butterfly valves Series 20, 21, 30, 31 and 34 are completely interchangeable.

### ACTUATOR MOUNTING FLANGE AND STEM CONNECTION (I)

Universally designed to ISO 5211 for direct mounting of Bray® power actuators and manual operators.

### FLANGE LOCATING HOLES (J)

Provide quick and proper alignment during installation.

**BODY (K)** One-piece wafer or lug style. Polyester coating for excellent corrosion resistance. Bray valve bodies meet ANSI 150 pressure ratings for hydrostatic shell test requirements.

## DESIGN FEATURES

Bray's Series 30 valve is a wafer version with flange locating holes, and the Series 31 is the companion lug version for dead-end service and other flange requirements. All Bray valves are tested to 110% of full pressure rating before shipment.

A major design advantage of Bray valve product lines is international compatibility. The same valve is compatible with most world flange standards – ANSI Class 125/150, BS 10 Tables D and E, BS 4504 NP 10/16, DIN ND 10/16, AS 2129 and JIS 10. In addition the valves are designed to comply with ISO 5752 face-to-face and ISO 5211 actuator mounting flanges. Therefore, one valve design can be used in many different world markets.

Due to a modular concept of design, all Bray® handles, manual gear operators and pneumatic and electric actuators mount directly to Bray valves. No brackets or adapters are required.

Bray interchangeability and compatibility offers you the best in uniformity of product line and low-cost performance in the industry today.

### POLYESTER COATING CORROSION PROTECTION

Bray's standard product offers valve bodies with a polyester coating, providing excellent corrosion and wear resistance to the valve's surface. The Bray polyester coating is a hard, gloss red finish.

Chemical Resistance – resists a broad range of chemicals including: dilute aqueous acids and alkalies, petroleum solvents, alcohols, greases and oils. Offers outstanding resistance to humidity and water.

Weatherability – outdoor tested resistant to ultra-violet radiation.

Abrasion Resistance – excellent resistance to abrasion.

Impact Resistance – withstands impact without chipping or cracking.

### NYLON 11 COATING

Optionally available for valve bodies where outstanding protection and performance is needed. A thermoplastic produced from a vegetable base, this coating is inert to fungus growth and molds. Nylon 11 is *USDA Approved*, as well as certified to ANSI/NSF 61 for water service.

Corrosion Resistance – superior resistance to a broad range of chemical environments. Salt spray tested in excess of 2,000 hours and seawater immersion tested for over 10 years without corrosion to metal substrates.

Nylon 11 features a very low coefficient of friction and excellent resistance to impact and ultra-violet radiation.

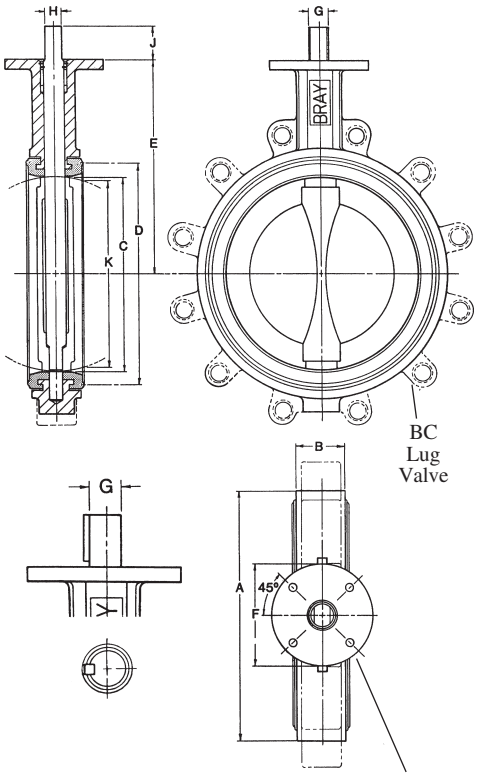


See chart for Actuator Mounting Flange Drilling.

### DIMENSIONS SERIES 30 Wafer

| Valve Size ins | Valve Size mm | A | B | C | D | E | F | Mounting Flange Drig. BC | No. Holes | Hole Dia. | G | H | J | K |
|---|---|---|---|---|---|---|---|---|---|---|---|---|---|---|
| 2 | 50 | 3.69 | 1.62 | 2.00 | 2.84 | 5.50 | 3.54 | 2.76 | 4 | .39 | .55 | .39 | 1.25 | 1.32 |
| 2 1/2 | 65 | 4.19 | 1.75 | 2.50 | 3.34 | 6.00 | 3.54 | 2.76 | 4 | .39 | .55 | .39 | 1.25 | 1.91 |
| 3 | 80 | 4.88 | 1.75 | 3.00 | 4.03 | 6.25 | 3.54 | 2.76 | 4 | .39 | .55 | .39 | 1.25 | 2.55 |
| 4 | 100 | 6.06 | 2.00 | 4.00 | 5.16 | 7.00 | 3.54 | 2.76 | 4 | .39 | .63 | .43 | 1.25 | 3.57 |
| 5 | 125 | 7.06 | 2.12 | 5.00 | 6.16 | 7.50 | 3.54 | 2.76 | 4 | .39 | .75 | .51 | 1.25 | 4.63 |
| 6 | 150 | 8.12 | 2.12 | 5.75 | 7.02 | 8.00 | 3.54 | 2.76 | 4 | .39 | .75 | .51 | 1.25 | 5.45 |
| 8 | 200 | 10.50 | 2.50 | 7.75 | 9.47 | 9.50 | 5.91 | 4.92 | 4 | .57 | .87 | .63 | 1.25 | 7.45 |
| 10 | 250 | 12.75 | 2.50 | 9.75 | 11.47 | 10.75 | 5.91 | 4.92 | 4 | .57 | 1.18 | .87 | 2.00 | 9.53 |
| 12 | 300 | 14.88 | 3.00 | 11.75 | 13.47 | 12.25 | 5.91 | 4.92 | 4 | .57 | 1.18 | .87 | 2.00 | 11.47 |

SERIES 31 Lug

| Lug Bolting Data BC | No. Holes | Threads UNC-2B |
|---|---|---|
| 4.75 | 4 | 5/8-11 |
| 5.50 | 4 | 5/8-11 |
| 6.00 | 4 | 5/8-11 |
| 7.50 | 8 | 5/8-11 |
| 8.50 | 8 | 3/4-10 |
| 9.50 | 8 | 3/4-10 |
| 11.75 | 8 | 3/4-10 |
| 14.25 | 12 | 7/8-9 |
| 17.00 | 12 | 7/8-9 |

| Valve Size ins | Valve Size mm | A | B | C | D | E | F | Mounting Flange Drig. BC | No. Holes | Hole Dia. | G | J | KEY SIZE | K |
|---|---|---|---|---|---|---|---|---|---|---|---|---|---|---|
| 14 | 350 | 17.05 | 3.00 | 13.25 | 15.28 | 13.62 | 5.91 | 4.92 | 4 | .57 | 1.38 | 2.00 | .39x.39 | 13.04 |
| 16 | 400 | 19.21 | 4.00 | 15.25 | 17.41 | 14.75 | 5.91 | 4.92 | 4 | .57 | 1.38 | 2.00 | .39x.39 | 14.85 |
| 18 | 450 | 21.12 | 4.25 | 17.25 | 19.47 | 16.00 | 8.27 | 6.50 | 4 | .81 | 1.97 | 2.50 | .39x.47 | 16.85 |
| 20 | 500 | 23.25 | 5.00 | 19.25 | 21.59 | 17.25 | 8.27 | 6.50 | 4 | .81 | 1.97 | 2.50 | .39x.47 | 18.73 |

| Lug Bolting Data BC | No. Holes | Threads UNC-2B |
|---|---|---|
| 18.75 | 12 | 1-8 |
| 21.25 | 16 | 1-8 |
| 22.75 | 16 | 1 1/8-7 |
| 25.00 | 20 | 1 1/8-7 |

# SELECTION DATA

## FLANGE REQUIREMENTS

Bray valves are designed for installation between ANSI Class 125/150 lb. weld-neck or slip-on flanges, BS 10 Tables D & E, BS 4504 NP 10/16, DIN ND 10/16, AS 2129 and JIS 10, either flat faced or raised faced. While weld-neck flanges are recommended, Bray has specifically designed its valve seat to work with slip-on flanges, thus eliminating common failures of other butterfly valve designs. When using raised face flanges be sure to properly align valve and flange. Type C stub-end flanges are not recommended.

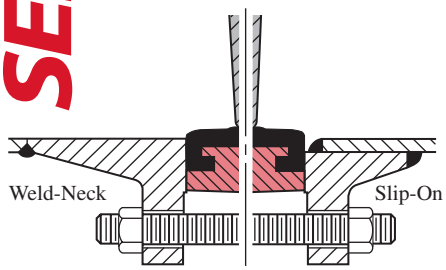


## PRESSURE RATINGS*

For bi-directional bubble-tight shut off, disc in closed position:

| Inches | mm | psig | bar |
|---|---|---|---|
| 2-12 | 50-300 | 175 | 12 |
| 14-20 | 350-500 | 150 | 10 |

**For Dead-end Service Applications:**
With *downstream flanges installed* or with *vulcanized seats,* the dead-end pressure ratings are equal to valve bi-directional ratings as stated above. With no downstream flanges or with seats that are not vulcanized, the dead-end pressure rating for 2"-12" valves is 75 psi (5 bar) for 14"-20" valves, 50 psi (3.5 bar).

*Pressure Ratings are based on standard disc diameters. For low pressure application, Bray offers a standard reduced disc diameter to decrease seating torques and to extend seat life, thus increasing the valve's performance and reducing actuator costs for the customer.

## VELOCITY LIMITS

For On/Off Services:
Fluids – 30 ft / sec (9m / s)
Gases – 175 ft / sec (54m / s)

## $C_V$ VALUES–VALVE SIZING COEFFICIENT

| Valve Size | | Disc Position (degrees) | | | | | | | | |
|---|---|---|---|---|---|---|---|---|---|---|
| ins | mm | 90° | 80° | 70° | 60° | 50° | 40° | 30° | 20° | 10° |
| 2 | 50 | 144 | 114 | 84 | 61 | 43 | 27 | 16 | 7 | 1 |
| 2 1/2 | 65 | 282 | 223 | 163 | 107 | 67 | 43 | 24 | 11 | 1.5 |
| 3 | 80 | 461 | 364 | 267 | 154 | 96 | 61 | 35 | 15 | 2 |
| 4 | 100 | 841 | 701 | 496 | 274 | 171 | 109 | 62 | 27 | 3 |
| 5 | 125 | 1376 | 1146 | 775 | 428 | 268 | 170 | 98 | 43 | 5 |
| 6 | 150 | 1850 | 1542 | 1025 | 567 | 354 | 225 | 129 | 56 | 6 |
| 8 | 200 | 3316 | 2842 | 1862 | 1081 | 680 | 421 | 241 | 102 | 12 |
| 10 | 250 | 5430 | 4525 | 2948 | 1710 | 1076 | 667 | 382 | 162 | 19 |
| 12 | 300 | 8077 | 6731 | 4393 | 2563 | 1594 | 1005 | 555 | 235 | 27 |
| 14 | 350 | 10538 | 8874 | 5939 | 3384 | 2149 | 1320 | 756 | 299 | 34 |
| 16 | 400 | 13966 | 11761 | 7867 | 4483 | 2847 | 1749 | 1001 | 397 | 45 |
| 18 | 450 | 17214 | 14496 | 10065 | 5736 | 3643 | 2237 | 1281 | 507 | 58 |
| 20 | 500 | 22339 | 18812 | 12535 | 7144 | 4536 | 2786 | 1595 | 632 | 72 |

$C_V$ is defined as the volume of water in U.S.G.P.M. that will flow through a given restriction or valve opening with a pressure drop of one (1) p.s.i. at room temperature. Recommended control angles are between 25°–70° open. Preferred angle for control valve sizing is 60°–65° open.

## EXPECTED SEATING/UNSEATING TORQUES (Lb.-Ins.)

| Valve Size | | Full-Rated Pressure Valves | | | | Reduced Disc Diameter |
|---|---|---|---|---|---|---|
| | | ΔP (PSI) | | | | ΔP (PSI) |
| ins | mm | 50 | 100 | 150 | 175 | 50 |
| 2 | 50 | 125 | 130 | 135 | 140 | 125 |
| 2 1/2 | 65 | 195 | 205 | 215 | 220 | 195 |
| 3 | 80 | 260 | 275 | 290 | 297 | 260 |
| 4 | 100 | 400 | 425 | 450 | 462 | 267 |
| 5 | 125 | 615 | 670 | 725 | 755 | 410 |
| 6 | 150 | 783 | 871 | 953 | 1003 | 537 |
| 8 | 200 | 1475 | 1650 | 1825 | 1915 | 983 |
| 10 | 250 | 2240 | 2520 | 2800 | 2940 | 1493 |
| 12 | 300 | 3420 | 3870 | 4320 | 4545 | 2280 |
| 14 | 350 | 4950 | 5700 | 6450 | — | 3300 |
| 16 | 400 | 6400 | 7700 | 9000 | — | 4267 |
| 18 | 450 | 7850 | 9850 | 11850 | — | 5267 |
| 20 | 500 | 10300 | 12900 | 15500 | — | 6867 |

Valve Torque Rating – Bray has classified valve torque ratings according to 3 types: non-corrosive lubricating service, general service, and severe service. Torques listed above are for general services. Consult Bray for torque information corresponding to specific applications.

TO USE TORQUE CHART, NOTE THE FOLLOWING:
1) For Bray valves, Series 20, 21, 30, 31 and 34.
2) Review Technical Bulletin No. 1001, Expected Seating/Unseating Torques, for explanation of the 3 service classes and their related seating/unseating torque values for given pressure differentials of Full-Rated and Reduced Disc Diameter valves.
3) Dynamic Torque values are not considered. See Technical Bulletin No. 1002 for evaluation of Dynamic Torque values vs. Seating/Unseating Torque values.
4) Do not apply a safety factor to above torque values when determining actuator output torque requirement.
5) For 3 way assemblies where one valve is opening and other is closing, multiply torque by 1.5 factor.

# SPECIFICATIONS

## RECOMMENDED SPECIFICATIONS FOR BRAY SERIES 30/31 SHALL BE:

- Polyester coated, cast iron, wafer or lug bodies.
- With flange locating holes that meet ANSI Class 125/150 (or BS 10 Tables D & E, BS 4504 NP 10/16, DIN ND 10/16, AS 2129 and JIS 10) drillings.
- Through-stem direct drive double "D" design requiring no disc screws or pins to connect stem to disc with no possible leak paths in disc/stem connection.
- Stem mechanically retained in body neck and no part of stem or body exposed to line media.
- Tongue-and-groove seat design with primary hub seal and a molded O-ring suitable for weld-neck and slip-on flanges. Seat totally encapsulates the body with no flange gaskets required.
- Spherically machined, hand polished disc edge and hub for minimum torque and maximum sealing capability.
- Equipped with non-corrosive bushing and self-adjusting stem seal.
- Bi-directional and tested to 110% of full rating.
- Bi-directional pressure ratings:
2"-12" valves: 175 psi, 14"-20" valves: 150 psi
Lug bodies for dead end service
With downstream flanges or vulcanized seats, pressure ratings are equal to bi-directional ratings as stated above.
With no downstream flanges or non-vulcanized seats: 2"-12" valves: 75 psi, 14"-20" valves: 50 psi
- No field adjustment necessary to maintain optimum field performance.
- The valve shall be Bray Series 30 wafer / 31 lug or equal.

## WEIGHTS

| Valve Size ins | Valve Size mm | Series 30 | Series 31 |
|---|---|---|---|
| 2 | 50 | 5.5 | 7.0 |
| 2 1/2 | 65 | 7.0 | 8.0 |
| 3 | 80 | 7.5 | 9.0 |
| 4 | 100 | 11.5 | 15.0 |
| 5 | 125 | 14.0 | 20.0 |
| 6 | 150 | 17.0 | 23.0 |
| 8 | 200 | 34.0 | 42.0 |
| 10 | 250 | 49.0 | 66.0 |
| 12 | 300 | 67.0 | 88.0 |
| 14 | 350 | 95.0 | 114.0 |
| 16 | 400 | 135.0 | 166.0 |
| 18 | 450 | 200.0 | 226.0 |
| 20 | 500 | 260.0 | 305.0 |

Weights are in lbs.

## MATERIALS SELECTION

2"–20" (50mm-500mm)

### BODY:

- Cast Iron ASTM A126 Class B
- Ductile Iron ASTM A536
- Cast Steel ASTM A216 WCB
- Aluminum ASTM B26

### SEAT:

- Buna-N – Food Grade
- EPDM – Food Grade
- FKM*
- White Buna-N – Food Grade

### STEM:

- Coated Carbon Steel
- 416 Stainless Steel ASTM A582 Type 416
- 304 Stainless Steel ASTM A276 Type 304
- 316 Stainless Steel ASTM A276 Type 316
- Monel

### DISC:

- Aluminum Bronze ASTM B148-954
- Coated Ductile Iron ASTM A536 Gr. 65-45-12
- Ductile Iron, Nylon 11 Coated, ASTM A536 Gr. 65-45-12
- Ductile Iron, Halar® Coated, ASTM A536 Gr. 65-45-12
- 316 Stainless Steel ASTM A351 CF8M
- Hastelloy® C-276 ASTM B575 Alloy N10276

## COMPONENTS

| No. | Qty. | Description |
|---|---|---|
| 1 | 1 | Body |
| 2 | 1 | Seat |
| 3 | 1 | Disc |
| 4 | 1 | Stem |
| 5 | 1 | Stem Seal |
| 6 | 1 | Stem Bushing |
| 7 | 2 | Stem Retainer |
| 8 | 1 | Thrust Washer |
| 9 | 1 | Retaining Ring |

## TEMPERATURE RANGE OF SEATS

| Type | Maximum | Minimum |
|---|---|---|
| EPDM | +250°F(121°C) | -40°F(-40°C) |
| Buna-N | +212°F(100°C) | 0°F(-18°C) |
| FKM* | +400°F(204°C) | 0°F(-18°C) |

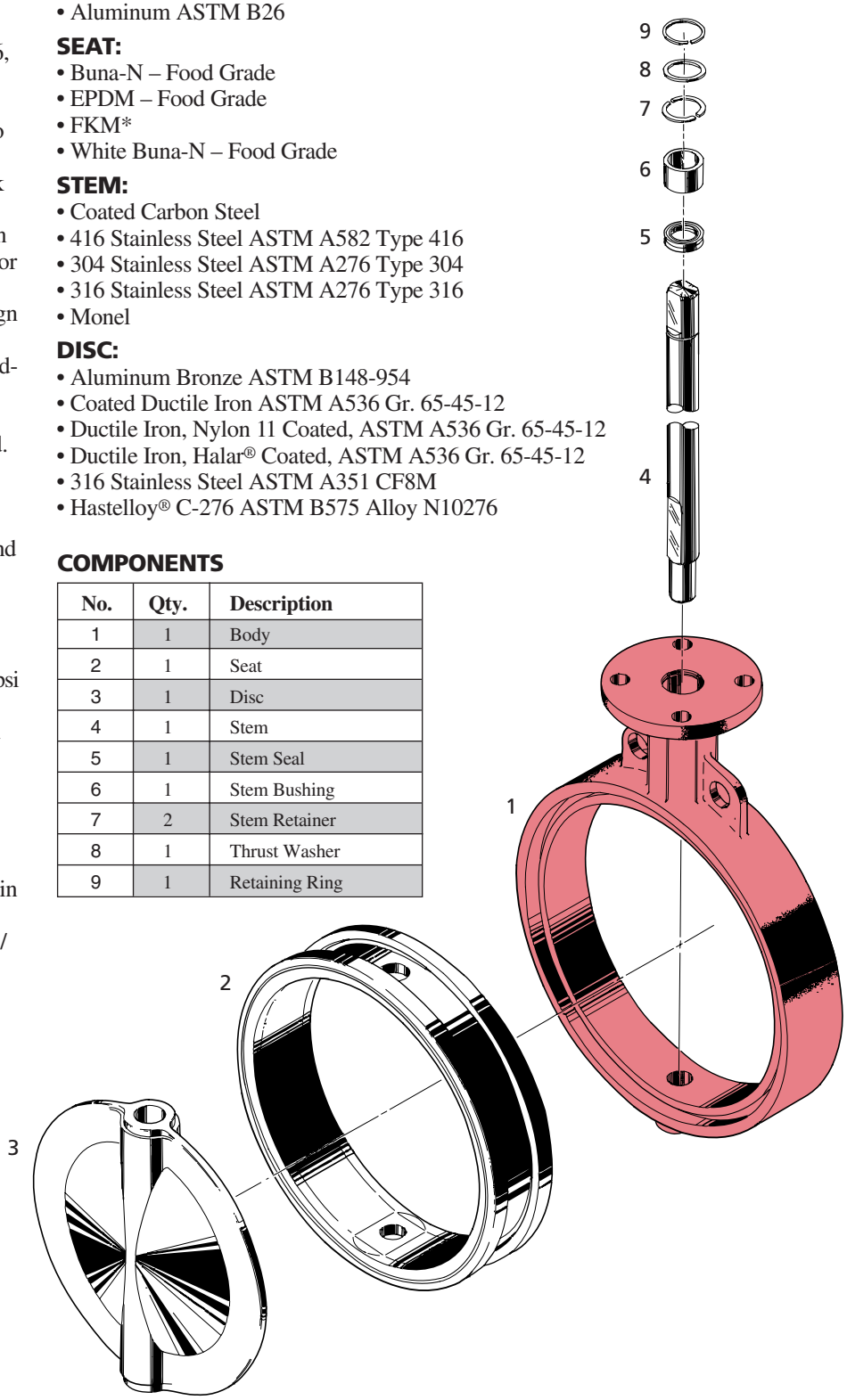


*FKM is the ASTM D1418 designation for Fluorinated Hydrocarbon Elastomers (also called Fluoroelastomers).

Hastelloy® is a registered trademark of Haynes International, Inc.
Halar® is a registered trademark of Ausimont U.S.A., Inc.

# ASSEMBLY

## INSTALLATION

Position the disc in the partially open position, maintaining the disc within the body face-to-face. Place the body between the flanges and install flange bolts. *Do not use flange gaskets.* Before tightening flange bolts, carefully open the disc to the full open position to ensure proper alignment and clearance of the disc O.D. with the adjacent pipe I.D. Leave disc in the full open position and tighten flange bolts per required specification. Once bolts are tightened, carefully rotate disc to closed position to ensure disc O.D. clearance.

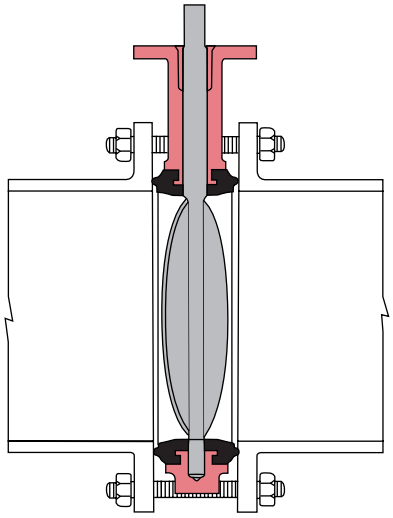

Disc in the Partially Open Position

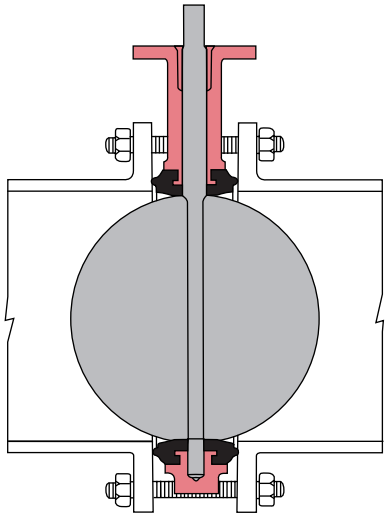

Disc in the Full Open Position

## MAINTENANCE AND REPAIR

The many Bray features minimize wear and maintenance requirements. No routine lubrication is required. All components – stem, disc, seat, bushing, stem seal, etc., are field replaceable, no adjustment is needed. If components require replacement, remove the valve from the line by placing the disc near the closed position, spread the flanges, support the valve, then remove the flange bolts. No valve maintenance, including removal of manual or power actuators, should be performed until the piping system is completely depressurized.

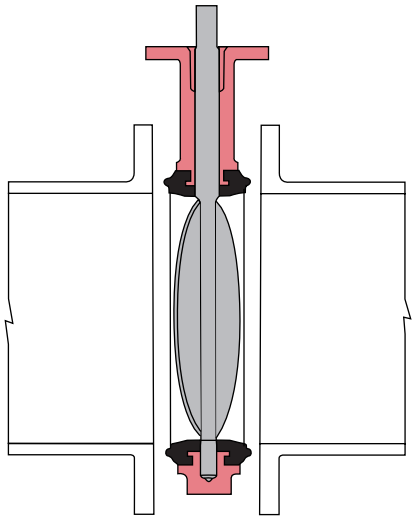

Disc in the Near Closed Position

## DISASSEMBLY

Remove the handle, gear operator, or actuator from actuator mounting flange. Remove "Spirolox®" retaining ring. Remove stem with its thrust washer and two C-ring stem retainers. Remove bushing and seal. Remove the disc from the seat, protecting disc edge at all times. Push the seat into an oval shape, then remove the seat from the body.

## ASSEMBLY

Push the valve seat into an oval and push it into the body with seat stem holes aligned to body stem holes. Push stem into the stem hole of body. For aid in inserting disc, slightly protrude stem beyond the I.D. of the top of the seat. Install a light coating of foodgrade silicone oil (for silicone free applications use soap and water) on the I.D. of seat. Insert the disc into the seat by lining up the disc hole with the stem hole of the seat. Note: the broached double "D" flats in the disc must be toward the bottom of valve body. (Take special care when lining disc up with stem.) With a downward pressure and rotating the stem back and forth, push the stem until the stem touches the bottom of the body stem hole. Make certain that when pushing the stem through disc bottom, the broached flats of stem and disc are aligned. After the stem has engaged the disc, but before the stem is firmly seated in the body, replace the stem seal and bushing. Install the two C-ring stem retainers in the groove in the stem and thrust washer on top of the C-rings. Seat the stem firmly in the body and install the "Spirolox®" retaining ring back into position.

DISTRIBUTOR

All statements, technical information, and recommendations in this bulletin are for general use only. Consult Bray representatives or factory for the specific requirements and material selection for your intended application. The right to change or modify product design or product without prior notice is reserved.
United States patent number 5,152,501.
Other patents issued and applied for worldwide.

Bray® CONTROLS
A Division of BRAY INTERNATIONAL, Inc.
13333 Westland East Blvd. Houston, Texas 77041
281.894.5454 FAX 281.894.9499 www.bray.com

Bray® is a registered trademark of BRAY INTERNATIONAL, Inc. © 2006 Bray International. All rights reserved. 

Bray CONTROLS

OPERATION AND MAINTENANCE MANUAL

# RESILIENT SEATED BUTTERFLY VALVES

20/21, 22/23, 30/31, 3A/3AH, 31H, 31U, 32/33, 35/36, 36H

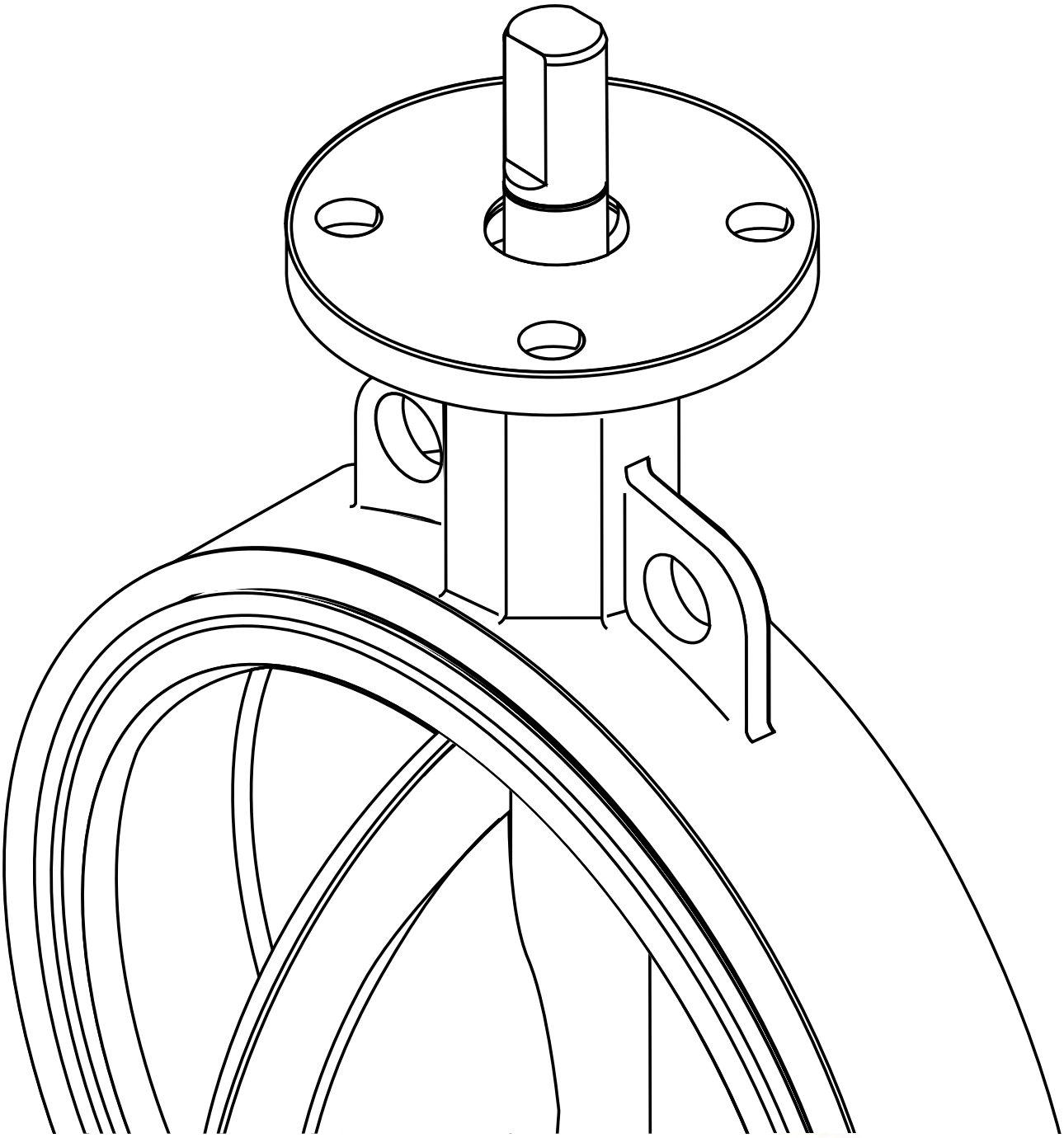

FOUNDED 1862

The High Performance Company

## Table Of Contents:


PAGE

Safety Instructions: Definition Of Terms ..... 1

Introduction ..... 1

Shipment & Storage ..... 1

Installation Considerations ..... 2

Valves With Spring Return Actuators ..... 2

Fail Open Assembly ..... 2

Fail Closed Assembly ..... 2

Valve Location And Orientation In Piping ..... 3

Valve Orientation Diagrams ..... 4-6

Installation Procedure ..... 6-9

PTFE Seated Butterfly Valves in Plastic Flanges ..... 9

Maintenance & Repair ..... 9

Appendix 'A' - S20/21 Disassembly/Assembly Instructions ..... 10-11

Appendix 'B' - S22/23 Disassembly/Assembly Instructions ..... 12-13

Appendix 'C' - S30/31 Disassembly/Assembly Instructions ..... 14-15

Appendix 'D' - S3A/3AH Disassembly/Assembly Instructions ..... 16-17

Appendix 'E' - S31H Disassembly/Assembly Instructions ..... 18-19

Appendix 'F' - S31U Disassembly/Assembly Instructions ..... 20-21

Appendix 'G' - S32/33 Disassembly/Assembly Instructions ..... 22-24

Appendix 'H' - S35/36 (Taper Pin Disc/Stem Connection)
Disassembly/Assembly Instructions ..... 25-27

Appendix 'I' - S35/36 (Internal Spline or Keyed Disc/Stem Connection)
Disassembly/Assembly Instructions ..... 28-33

Appendix 'J' - S36H Disassembly/Assembly Instructions ..... 34-36



FOR INFORMATION ON THESE PRODUCTS AND OTHER BRAY PRODUCTS
PLEASE VISIT US AT OUR WEB PAGE - www.bray.com

# SAFETY INSTRUCTIONS - DEFINITION OF TERMS

**READ AND FOLLOW THESE INSTRUCTIONS**
**SAVE THESE INSTRUCTIONS**

| | |
|---|---|
| **WARNING** | indicates a potentially hazardous situation which, if not avoided, **could** result in death or serious injury. |
| **CAUTION** | indicates a potentially hazardous situation which, if not avoided, may result in minor or moderate injury. |
| **NOTICE** | used without the safety alert symbol indicates a potential situation which, if not avoided, may result in an undesirable result or state, including property damage. |

## Introduction

### Historical Experience

Based on over twenty years experience in the butterfly industry, Bray can state without question the majority of all field problems for resilient seated butterfly valves are directly related to poor installation procedures. For this reason, it is very important all distributor salespeople educate their customers regarding proper installation of resilient seated butterfly valves.

### Butterfly Valve Seat / Disc Function

Before reviewing the proper installation, maintenance, and repair procedures for resilient seated butterfly valves, let's discuss the seat-disc function of a butterfly valve. The seat in a resilient seated butterfly valve has molded o-rings on its flange face. **As a result, no gaskets are required as these o-rings serve the function of a gasket.** The flange face and molded o-rings of the seat extend beyond the body face-to-face to ensure sealing at the flange faces. The seat material, which extends past the face is compressed in installation and flows toward the center of the valve seat I.D.

In essence, the elastomer seat acts as a liquid, and the displaced elastomer moves toward the point of least resistance. The seat I.D. of all resilient seated butterfly valves is smaller than the disc O.D. This difference, the disc-seat interference, plus the increased interference due to the elastomer movement toward the seat center after installation, has been engineered so as to be the basis for pressure rating capability and the related seating/unseating torques. **Any change in this interference due to improper installation directly affects the pressure rating and seating/unseating torques.**

Finally, unlike many valve types, the resilient seated butterfly valve's disc actually extends beyond the face of the valve body at given angles of opening (say, 30° or more) when installed between flanges.

**CAUTION**

It is very important before installation to ensure the critical chord dimension of the disc at the full open position is less than the adjacent pipe flange I.D.

### Shipment & Storage

A. The seat, disc, stem and bushing of the resilient seated butterfly valve should be coated with silicone lubricant unless specified otherwise as recommended by Bray Technical Bulletin 1028.

B. The disc should be positioned at 10° open. **Note**: See page 2 for special considerations for valves with spring return actuators.

C. Valves should be stored indoors with a preferred temperature range from 40° F (4°C) to 85° F (29°C).

D. When valves are stored for a long time, open and close the valves once every 3 months.

E. Ship and store valves so that no heavy loads are applied to the bodies.

# Installation Considerations – Piping and Valve Orientation and Placement

## Piping and Flanged Compatibilities

### Piping

These valves have been engineered so that the critical disc chord dimension at the full open position will clear the adjacent inside diameter of most types of piping, including Schedule 40, lined pipe, heavy wall, etc.

### Metal Flanges

Resilient seated butterfly valves have been designed to be suitable for all types of flanges (ASME, DIN, JIS and other international flange standards), whether flat-faced, raised face, slip-on, weld-neck, etc. Proper alignment of any butterfly valve between flanges is critical to good performance of the valve. The flange bolts must also be evenly tightened around the circumference of the valve, providing consistent flange compression of the molded o-ring in the seat face.

Since Bray does not recommend the use of gaskets between flanges on resilient seated butterfly valves, a uniform flange face is critical to proper valve sealing. Most weld-neck and slip-on flanges conforming to ASME specifications have an appropriate flange face. Types A and B butt-weld stub-end flanges also provide a suitable mating surface for the molded o-ring.

It should be noted that Type C butt-weld stub-end flanges have an "as formed" flange face. The varying surface of this flange face can create sealing problems between any resilient-seated butterfly valve and the flange face. For this reason, Type C flanges are not recommended for use with resilient-seating butterfly valves.

### Non-Metallic Flanges

When non-metallic flanges, such as plastic or PVC, are used with resilient seated butterfly valves, care must be taken not to over-tighten the flange bolts. The inherent flexibility of these non-metallic flange materials allow them to be over-tightened relatively easily. Flexing caused by this over-tightening can actually reduce the compression of the valve between the flanges, causing leaks between the valve and the flange face. Proper alignment and firm, even, but not excessive tightening of flange bolts are especially important with non-metallic flanges. In some cases, non-metallic flanges of low quality will not mate tightly with butterfly valves regardless of the care taken during installation.

## Valves with Spring Return Actuators

### 1. Fail Closed Assemblies

If the valve is supplied with an actuator, the butterfly valve is shipped in the full closed position (as no air pressure is present to compress the springs and open the disc).

**CAUTION**

Installing the valve with the disc in the full closed position may create a compression set on the seat causing higher than expected torques or premature seat failure. It is recommended to:

- Remove the actuator. Be sure to scribe the valve and actuator to ensure the re-installed actuator is in the exact same quadrant as originally configured
- Install the valve per the attached installation tag instructions
- Re-install the actuator ensuring it is in the proper quadrant

### 2. Fail Open Assemblies

If the valve is supplied with an actuator, the butterfly valve disc is shipped in the full open position (as no air pressure is present to compress the springs and close the valve disc.) The sealing surface, or disc edge, is therefore exposed. Damage to that surface will cause premature seat failure.

**CAUTION**

Use caution installing the valve being careful not to damage the disc edge. It is recommended to:

- Remove the actuator. Be sure to scribe the valve and actuator to ensure the re-installed actuator is in the exact same quadrant as originally configured
- Install the valve per the attached installation tag instructions
- Re-install the actuator ensuring it is in the proper quadrant

### 3. Valve Location

a. Resilient seated butterfly valves should be installed if possible a minimum of 6 pipe diameters from other line elements, i.e., elbows, pumps, valves, etc. of course, 6 pipe diameters are not always practical, but it is important to achieve as much distance as possible.

b. Where the resilient seated butterfly valve is connected to a check valve or pump, use an expansion joint between them to ensure the disc does not interfere with the adjacent equipment.

### 4. Valve Orientation

a. In general, Bray recommends the resilient seated valve be installed with the stem in the vertical position and the actuator mounted vertically directly above the valve; however, there are those applications as discussed below where the stem should be horizontal. **NOTE:** Bray does not recommend valves be installed in an upside-down position.

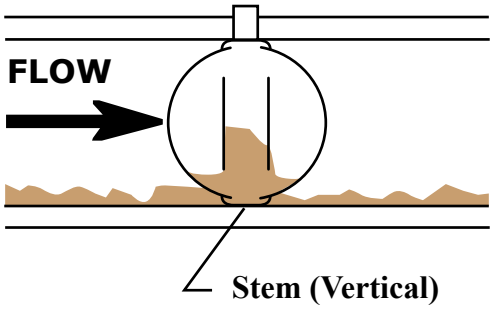


**INCORRECT INSTALLATION**

**Sludge builds up on disc**

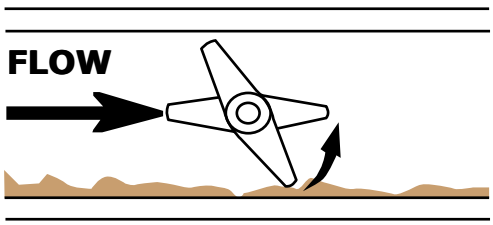


**Stem (Horizontal)**

**CORRECT INSTALLATION**

**Sludge passes under disc**

**b. For slurries, sludge, mine tailing, pulp stock, dry cement, and any media with sediment or particles, Bray recommends the resilient seated valve be installed with the stem in the horizontal position with the lower disc edge opening in the downstream direction.**

### Valve Orientation (Continued)

c. Resilient seated butterfly valve located at the discharge of a pump should be oriented as follows:

| | INCORRECT INSTALLATION | CORRECT INSTALLATION |
|---|---|---|
| i.) For centrifugal Pump – Pump shaft horizontal and stem vertical | 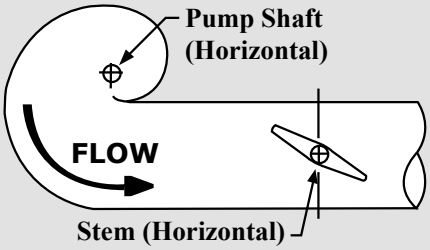  | 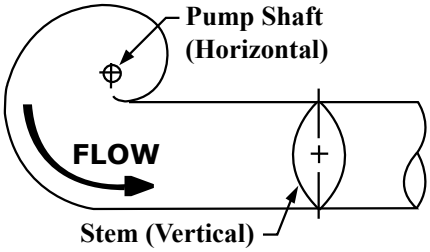  |
| ii.) Centrifugal Pump – Pump shaft vertical & stem horizontal | 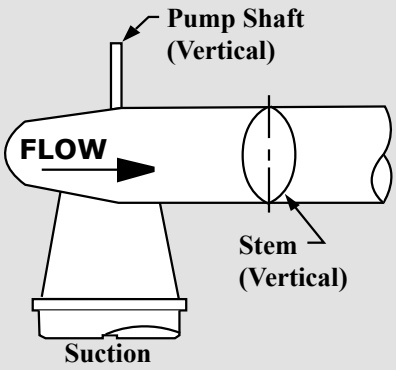  | 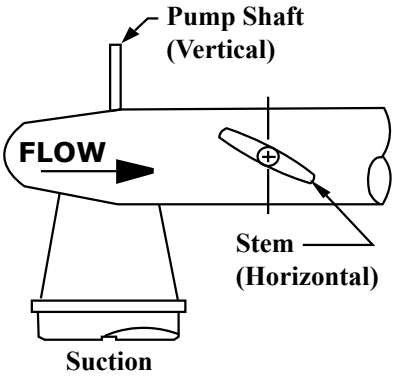  |
| iii.) Axial Pump – Pump shaft vertical & stem vertical | 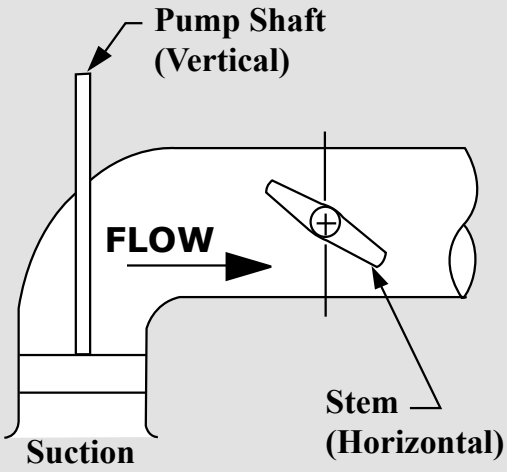  | 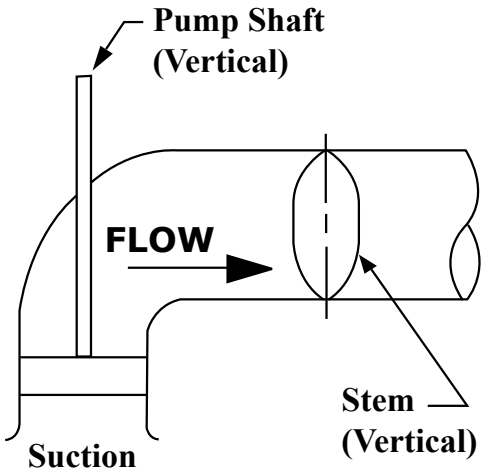  |

**Valve Orientation (Continued)**

d. Butterfly valves located downstream of a bend or pipe reducer should be oriented as follows:

| | INCORRECT INSTALLATION | CORRECT INSTALLATION |
|---|---|---|
| i.) Bend | 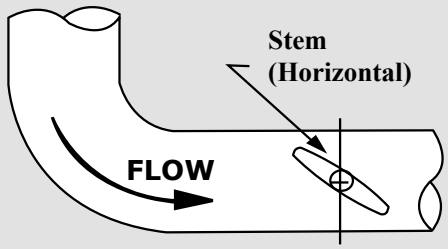 | 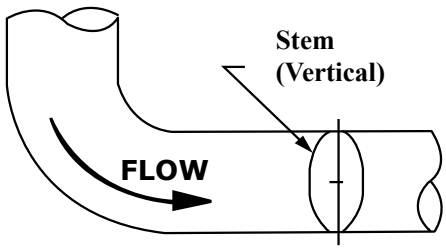 |
| ii.) Tee | 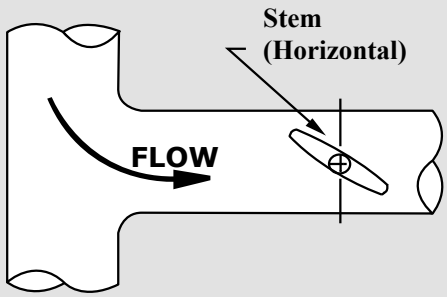 | 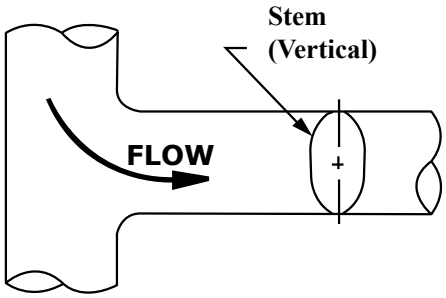 |
| iii.) Pipe Reducer | 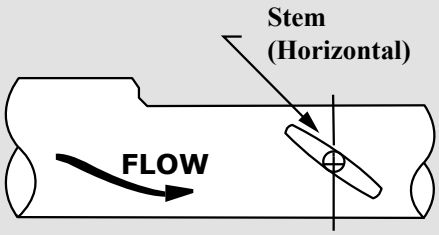 | 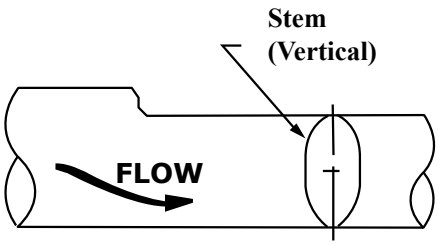 |

**Valve Orientation (Continued)**

e. Butterfly valves in combination for control/isolation applications should be installed as follows:

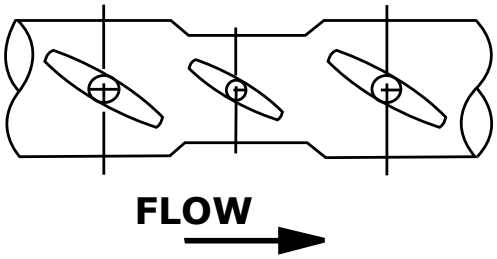


**INCORRECT INSTALLATION**

Combination with all valve stems in the same direction accelerates possible noise, vibration, & erosion problems.

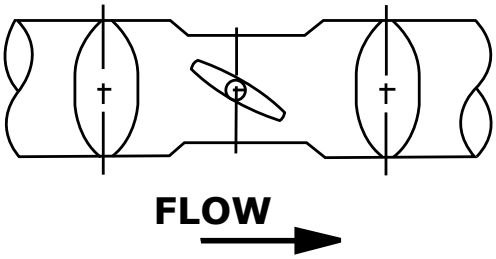


**CORRECT INSTALLATION**

Combination with the stem of the control valve at right angle to those of other valves tends to cancel the drift of the fluid, and reduces noises, vibration, and erosion.

## Installation Procedure

## A. General Installation

1. Make sure the pipeline and pipe flange faces are clean. Any foreign material such as pipe scale, metal chips, welding slag, welding rods, etc., can obstruct disc movement or damage the disc or seat.
2. The Bray elastomer seat has molded o-rings on the face of the seat. **As a result, no gaskets are required as these o-rings serve the function of a gasket.**
3. Align the piping and then spread the pipe flanges a distance apart so as to permit the valve body to be easily dropped between the flanges without contacting the pipe flanges ***(see figure 1 page 6).***
4. Check to see that the valve disc has been positioned to a partially open position, with the disc edge about 1/2 inch to 3/8 inch inside the face of the seat, (approximately 10° open) ***(see figure 1 page 6)*** **Note: See page 2 for special consideration for valves with spring return actuators.**
5. Insert the valve between the flanges as shown in figure 1 of page 6, taking care not to damage the seat faces. Always pick the valve up by the locating holes or by using a nylon sling on the neck of the body.

**WARNING**

Never pick up the valve by the actuator or operator mounted on top of the valve.

**Figure 1 – Insert Resilient Seated Butterfly Valve Between Flanges**

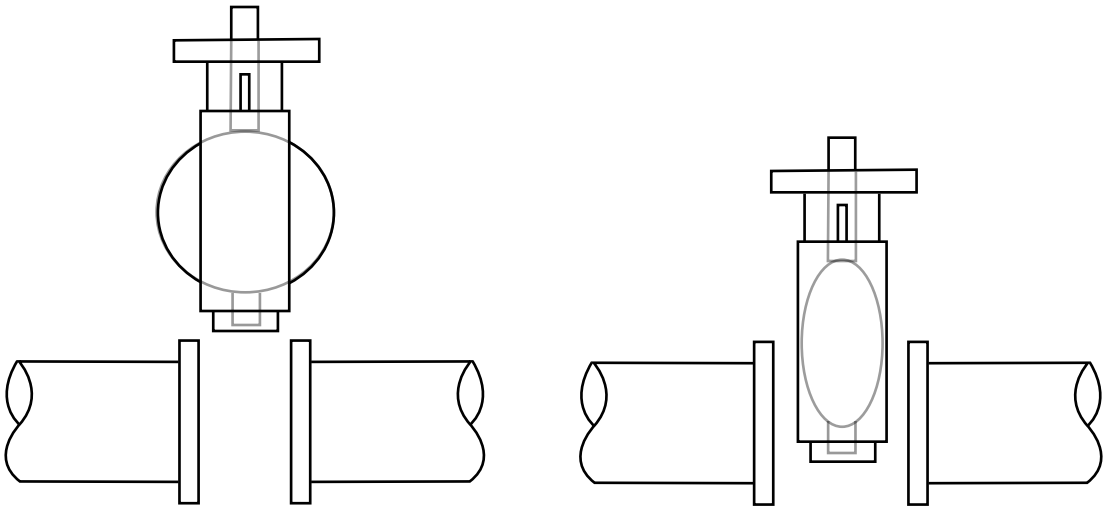

**INCORRECT INSTALLATION** | **CORRECT INSTALLATION**

**CAUTION**

Pipe not spread, disc opened beyond valve body face; Results; Disc edge damaged when it hits pipe flange.

Pipe spread and aligned, disc rotated; Results; no undesirable beginning seating/ unseating torque, disc edge protected.

6. Place the valve between the flanges, center it, and then span the valve body with all flange bolts, but do not tighten the bolts. Carefully open the disc to the full open position, making sure the disc does not hit the adjacent pipe I.D. Now systematically remove jack bolts or other flange spreaders, and hand-tighten the flange bolts as shown in **Figure 2** below. Very slowly close the valve disc to ensure disc edge clearance from the adjacent pipe flange I.D. Now open the disc to full open and tighten all flange bolts per specification as shown in **Figure 2**. Finally, repeat a full close to full open rotation of the disc to ensure proper clearances ***(See figures 3 & 4 page 7)***.

**Figure 2 – Flange Bolt Tightening Pattern**

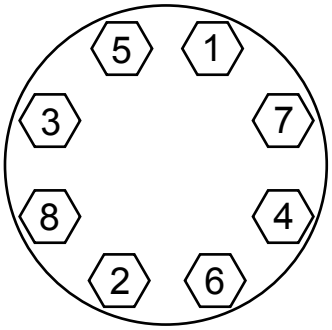

**Figure 3 – Initial Centering & Flanging of Valve**

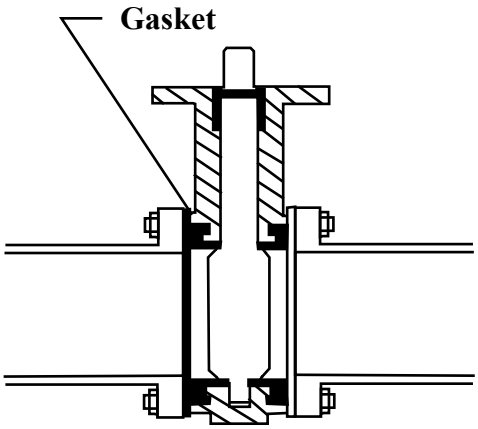


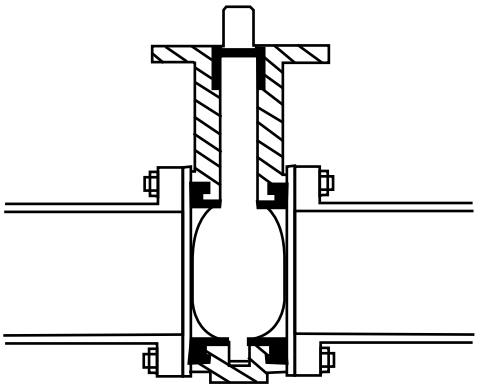

## INCORRECT INSTALLATION

Disc in closed position; gaskets used; Results – Seat distorted and over-compressed causing high initial unseating torque problems.

## CORRECT INSTALLATION

Bolts snugged, not torqued tight, disc edge within body face-to-face but not fully closed, no flange gaskets; Results: No disc edge damage, proper sealing allowed.

**Figure 4 – Final Aligning & Tightening of Flange Bolts**

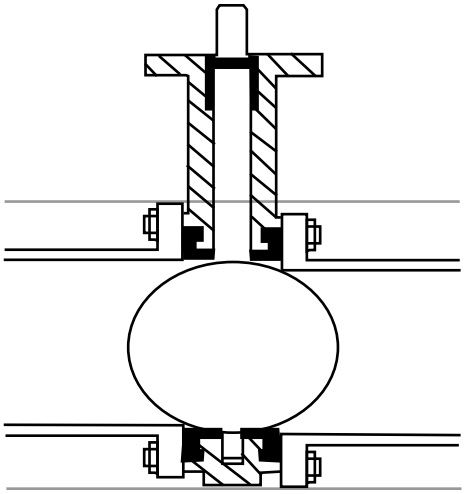

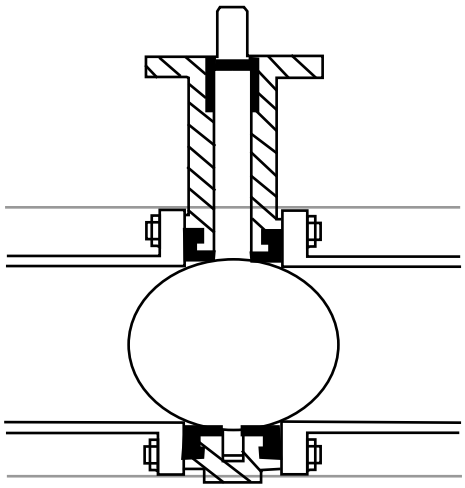

## INCORRECT INSTALLATION

Piping misaligned; Results Disc O.D. strikes pipe I.D. causing disc edge damage, increased torque & leakage. Seat face o-rings will not seal properly with incorrectly aligned piping.

## CORRECT INSTALLATION

Piping aligned properly when bolts tightened, disc in full open position; Results – disc clears adjacent pipe I.D., seat face seals properly, no excessive initial torque.

When resilient seated butterfly valves are to be installed between ASME welding type flanges, care should be taken to abide by the following procedure to ensure no damage will occur to the seat:

1. Place the valve between the flanges with the flange bores and valve body aligned properly. The disc should be in the 10° open position.
2. Span the body with the bolts.
3. Take this assembly of flange-body-flange and align it properly to the pipe.
4. Tack weld the flanges to the pipe.
5. When tack welding is complete, remove the bolts and the valve from the pipe flanges and complete the welding of the flanges. Be sure to let the pipe and flanges cool before installing the valve.

**CAUTION**

Never complete the welding process (after tacking) with the valve between pipe flanges. This causes severe seat damage due to heat transfer.

**Installation of Bray PTFE Seated Butterfly Valves in Plastic Flanges.**

Bray recommends the following guidelines when PTFE Seated Valves are installed between plastic flanges:

1. The valve body should be coated with epoxy, not nylon. The extra thickness of the nylon coating slightly reduces the seat compression, and every advantage to maximize seat compression should be taken with plastic flanges.
2. The plastic flange can be either one piece construction, or two piece construction comprised of a stub end and a backup ring.
3. The plastic flange style can be butt-weld, socket or slip-on, but butt-weld and socket are preferred.
4. The plastic flange face must be flat. Concave and convex flange faces are not acceptable. This includes flange faces that were originally flat but later distorted into a concave shape by over tightening the flange bolts.
5. The plastic flange face surface may have grooves or serrations, provided the grooves do not exceed .100” (2.54 mm) in width or .020” (.508 mm) in depth. If the grooves are less than .100” (2.54 mm) in width, the groove depth must not exceed the width. However, fine conentric or “phonograph record” grooves are acceptable regardless of the groove depth.
6. Flange gaskets must not be used with PTFE seats, since they create an uncontrolled over compression that can buckle the PTFE and damage the seat. If a damaged face, a flange gasket can appear to cure the leak to atmosphere, while simultaneously damaging the PTFE seat and creating a second leak across the disc or up the stem hole. Leaks across the plastic flange must be cured without the use of gaskets, by proper selection and installation of the flange.
7. The bolts holding plastic flanges should be installed in strict conformance to the recommended practices of the plastic flange manufacturer. This usually involves aligning the flanges accurately, using lubricated bolts, and tightening the bolts in the proper sequence and to the specified torque. Uniform stress across the flange prevents leakage.

## Maintenance and Repair

The many Bray features minimize wear and maintenance requirements. No routine lubrication is required. **All components – stem, disc, seat, bushing, stem seal, etc., are field replaceable, no adjustment is required**. If components require replacement, the valve may be removed from the line by placing the disc in the near closed position, then supporting the valve and removing the flange bolts.

**WARNING** No valve maintenance, including removal of manual or power actuators, should be performed until the piping system is completely depressurized.

# Appendix A

## Disassembly/Assembly Instructions

## Series 20/21 Resilient Seated Butterfly Valves

### Disassembly

1. Remove handle, gear operator or power actuator from actuator mounting flange.
2. Remove the body bolts and pull the lower body half away from the seat.
3. Pull the seat and disc stem from the upper body half.
4. Remove bushing and seal from the upper body.
5. Push the seat into an oval shape and remove the disc stem by withdrawing the short stem end first.

### Assembly

1. Push the long stem end of the disc into the seat.
2. Then push the seat over the disc's short stem.
3. Place the disc stem and seat into the upper body half.
4. Align the lower body with the upper body and position lower body in the seat.

| | |
|---|---|
| **NOTICE** | The body halves have a matching casting node on one side only to ensure correct assembly of body halves. |

5. Replace the body bolts and tighten.
6. Install the stem seal, then the stem bushing.

   **Note: It is recommended that the stem bushing be coated with a light amount of silicone grease before installation in the valve body. This coating of silicone grease will assist in keeping the stem bushing in the valve body until an actuator is mounted on the valve.**

7. Replace handle, manual gear operator or power actuator on the actuator mounting flange.

## Appendix A

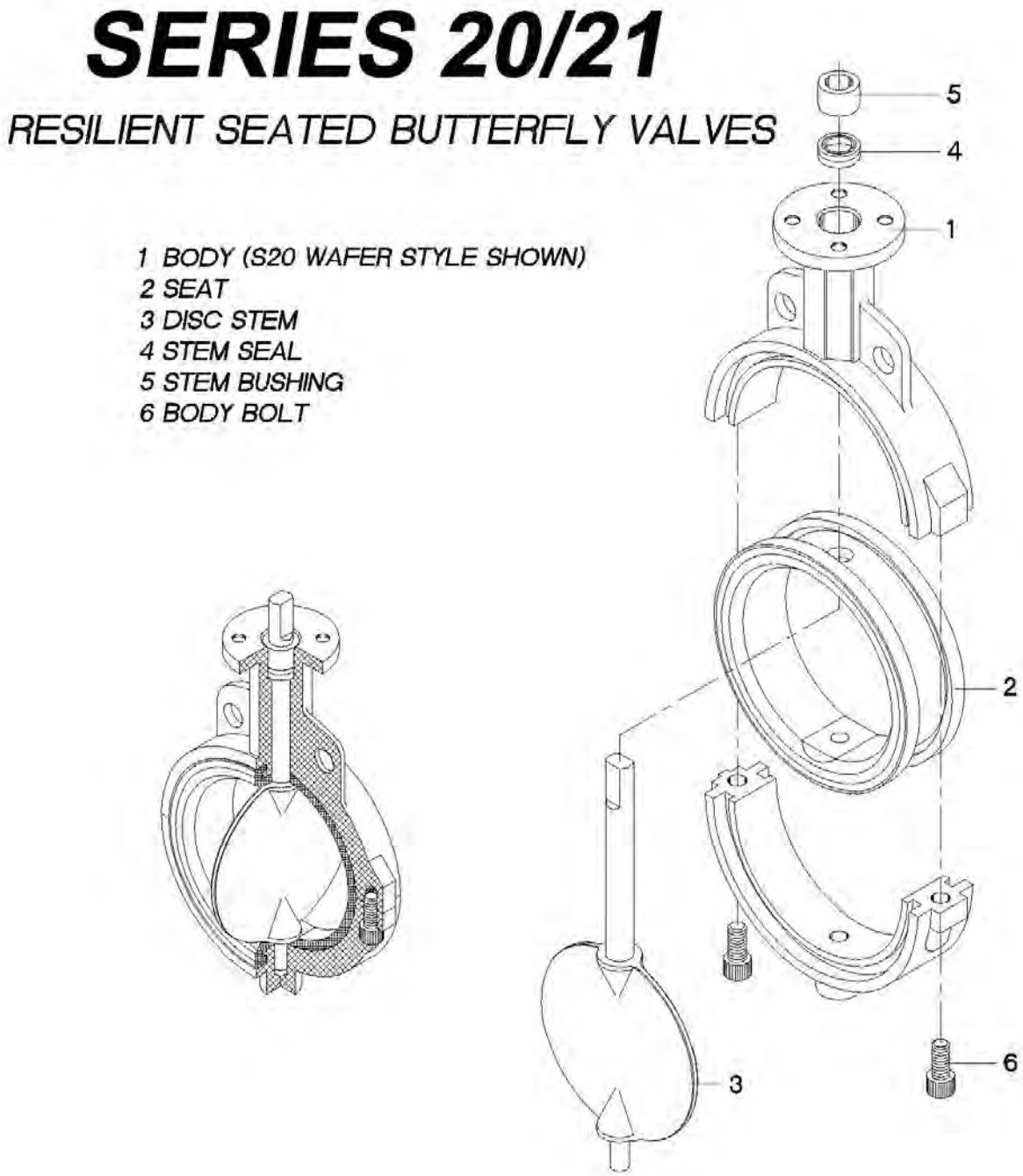
SERIES 20/21
RESILIENT SEATED BUTTERFLY VALVES
1 BODY (S20 WAFER STYLE SHOWN)
2 SEAT
3 DISC STEM
4 STEM SEAL
5 STEM BUSHING
6 BODY BOLT
5
4
1
2
3
6

# Appendix B

## Disassembly/Assembly Instructions

## Series 22/23 Resilient Seated Butterfly Valves

### Disassembly –

1. Remove the handle, gear operator, or power actuator from actuator mounting flange.
2. Remove the "Spirolox"® retaining ring and the two C-ring stem retainers from the stem hole.
3. Then remove the stem, bushing and seal.
4. Remove the disc from the seat, protecting the disc edge at all times.
5. Remove the seat energizer from the stems and seat.
6. Remove the lower and upper stems from the disc or remove the lower stem if the upper stem is connected to the disc
7. Compress the seat just enough to allow the disc to be removed along with the seal capsules.
8. Remove the retainer bushing and upper stem seal.

### Assembly –

1. Install the stem bearings in upper and lower body halves.
2. Place the body seal strip on the lower body half, overlapping the body width by approximately 0.19" on both sides.
3. Press the seat to make the I.D. elliptical, then insert the shaft seals and place the disc into the seat. Rotate the disc hubs into alignment with the seat.
4. Insert the upper and lower stems.
5. Slip one seat energizer strip onto the lower portion of the upper shaft.
6. Insert the upper shaft with the pre-installed seat energizer strip into the disc/seat sub assembly.
7. Drive the upper shaft into the disc and slip one seat energizer strip onto the lower shaft.
8. Rotate the disc into the open position and insert the disc/seat/stems/energizer sub assembly into the upper body half.
9. Place the lower body half over the seat, and ensure that both body halves are properly aligned (identified by cast-on markings.
10. Attach and tighten the body fasteners.

# SERIES 22/23

## RESILIENT SEATED BUTTERFLY VALVES

1. BODY
2. DISC
3. SEAT
4. UPPER STEM
5. LOWER STEM
6. BUSHING
7. UPPER STEM SEAL
8. SEAL CAPSULE
9. BEARING
10. SEAT ENERGIZER
11. CAP SCREW
12. RETAINER
13. BODY SEAL
14. ID TAG

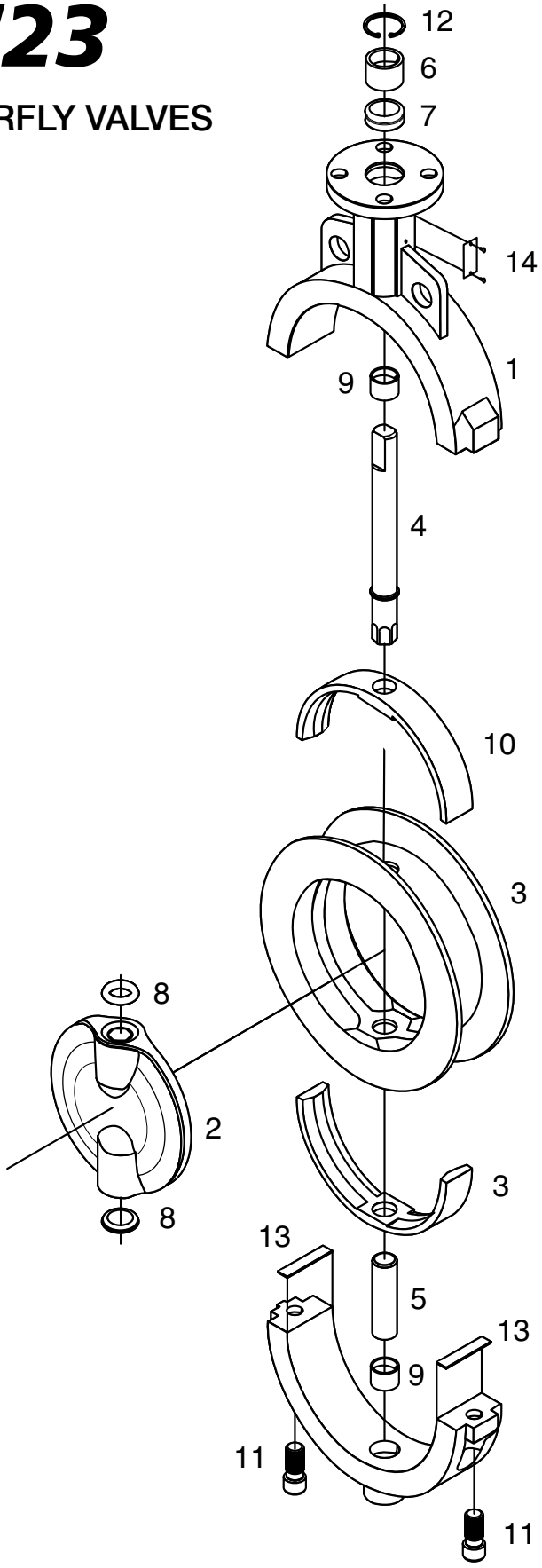

# Appendix C

## Disassembly/Assembly Instructions

## Series 30/31 Resilient Seated Butterfly Valves

### Disassembly –

1. Remove the handle, gear operator, or power actuator from actuator mounting flange.
2. Remove the "Spirolox"® retaining ring and the two C-ring stem retainers from the stem hole.
3. Then remove the stem, bushing and seal.
4. Remove the disc from the seat, protecting the disc edge at all times.
5. Push the seat into an oval shape, and then remove the seat from the body.

### Assembly –

1. Push the valve seat into an oval and push it into the body with seat stem holes aligned to body stem holes.

| | |
|---|---|
| **NOTICE** | When installing the seat the larger hole should be on top and the smaller hole should be on bottom. |

2. Insert stem seal and bushing.
3. Push stem into the stem hole of the body until the bottom of the stem is flush with the inner top edge of the seat.
4. Install a light coating of silicone or grease on the I.D. of seat. Insert the disc into the seat by lining up the disc holes with the stem holes of the seat.

   **Note: The broached double "D" flats in the disc must be toward the bottom of the valve body.**

5. With a downward pressure and rotating the stem back and forth, push the stem until the stem touches the bottom of the body stem hole.
6. Make certain that when pushing the stem through the disc bottom, the broached flats of stem and disc are aligned.
7. Replace the stem bushing and two stem retainers, then replace the "Spirolox"® retaining ring back into position.
8. Replace handle, manual gear operator or power actuator on the actuator mounting flange.

# SERIES 30/31

## RESILIENT SEATED BUTTERFLY VALVES

1 BODY (S30 WAFER STYLE SHOWN)
2 SEAT
3 DISC
4 STEM
5 STEM SEAL
6 STEM BUSHING
7 STEM RETAINER
8 THRUST WASHER
9 RETAINING RING

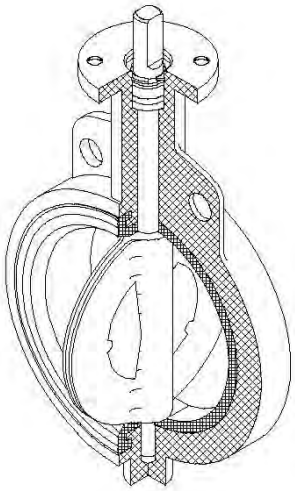

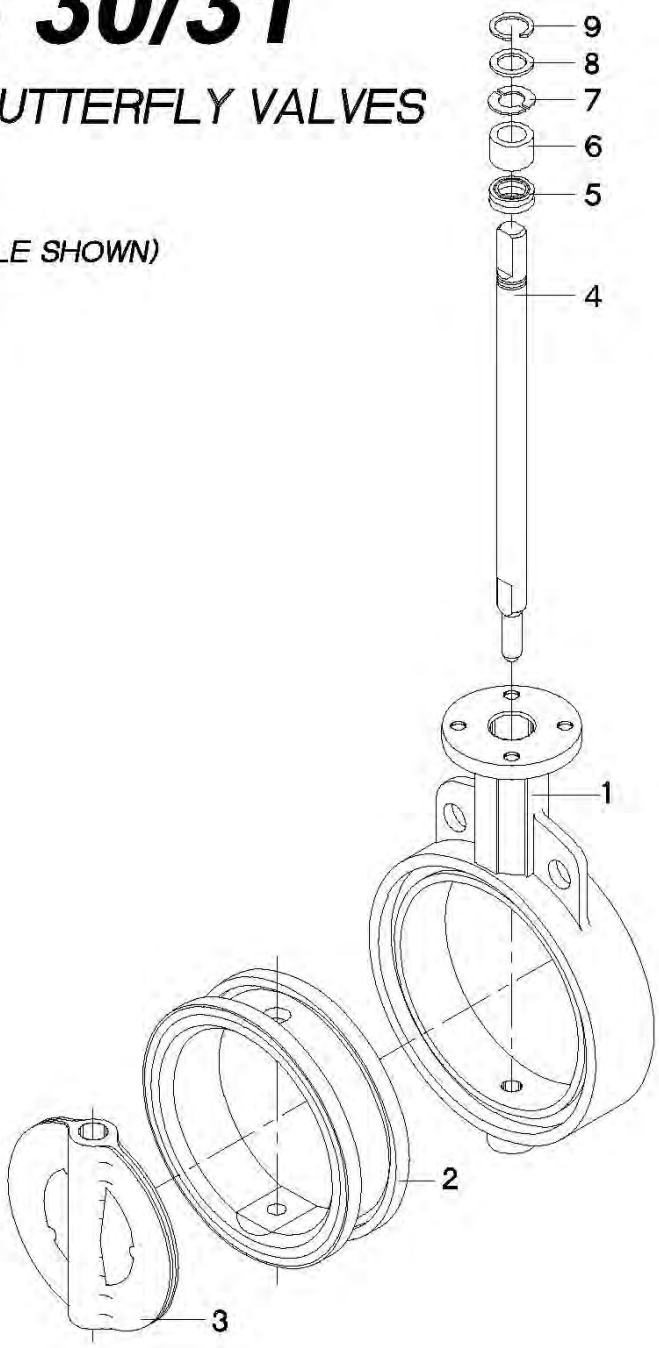

# Appendix D

## Disassembly/Assembly Instructions

## Series 3A/3AH Resilient Seated Butterfly Valves

### Disassembly –

1. Remove the handle, gear operator, or power actuator from actuator mounting flange.
2. Remove the "Spirolox"® retaining ring and the two C-ring stem retainers from the stem hole.
3. Then remove the stem, bushing and seal.
4. Remove the disc from the seat, protecting the disc edge at all times.

   **Note: The seat is bonded to the body and is not easily field replaceable. Please contact your local Bray representative for seat replacement.**

### Assembly –

1. Insert stem seal and bushing.
2. Push stem into the stem hole of the body until the bottom of the stem is flush with the inner top edge of the seat.
3. Install a light coating of silicone or grease on the I.D. of seat. Insert the disc into the seat by lining up the disc holes with the stem holes of the seat.

   **Note: The broached double "D" flats in the disc must be toward the bottom of the valve body.**

4. With a downward pressure and rotating the stem back and forth, push the stem until the stem touches the bottom of the body stem hole.
5. Make certain that when pushing the stem through the disc bottom, the broached flats of stem and disc are aligned.
6. Replace the stem bushing and two stem retainers, then replace the "Spirolox"® retaining ring back into position.
7. Replace handle, manual gear operator or power actuator on the actuator mounting flange.

# SERIES 3A/3AH

## RESILIENT SEATED BUTTERFLY VALVES

1. BODY
2. SEAT
3. DISC
4. STEM
5. STEM SEAL
6. STEM BUSHING
7. STEM RETAINER
8. THRUST WASHER
9. RETAINING RING

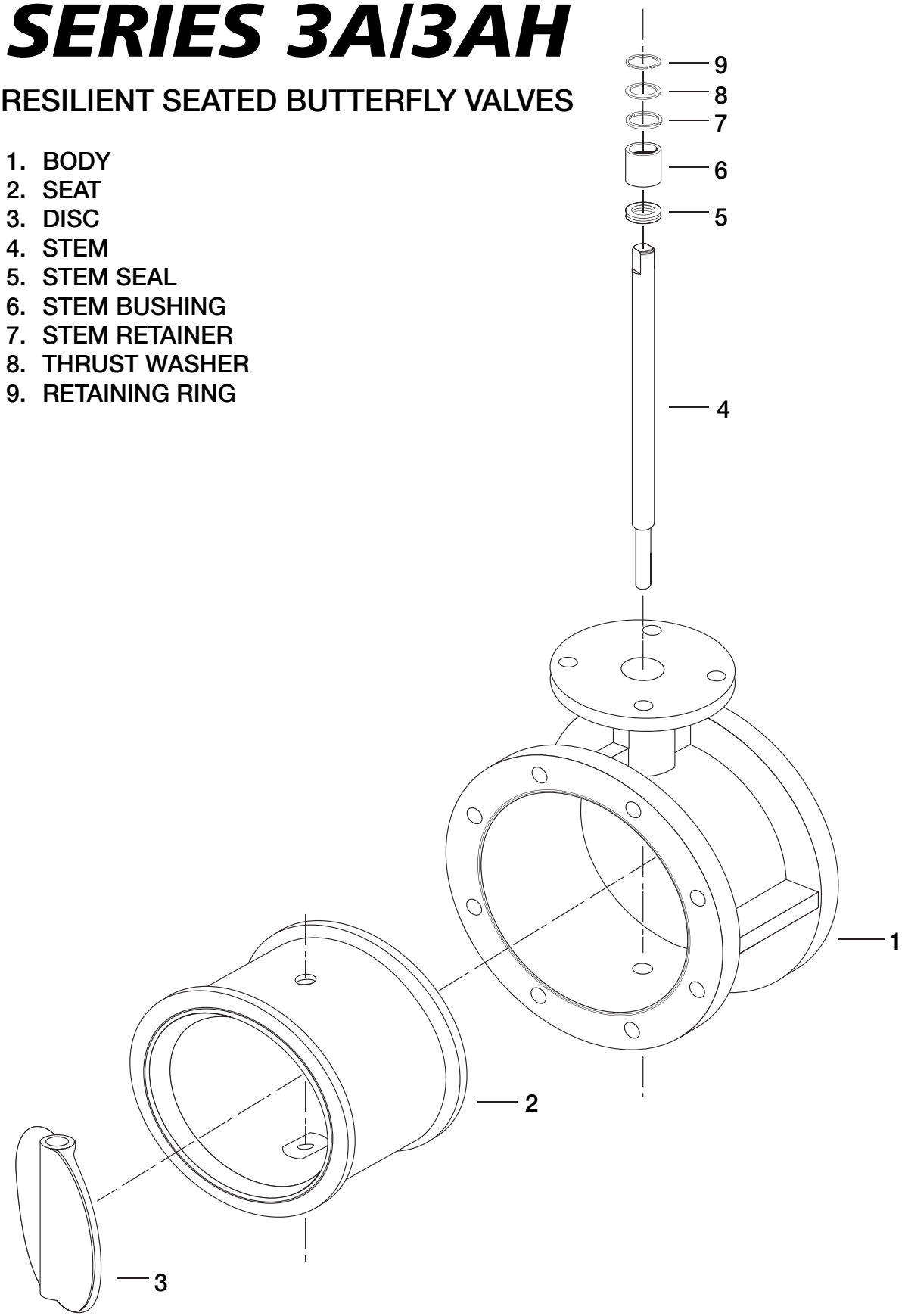

# Appendix E

## Disassembly/Assembly Instructions

## Series 31H Resilient Seated Butterfly Valves

### Disassembly –

1. Remove the handle, gear operator, or power actuator from actuator mounting flange.
2. Remove the "Spirolox"® retaining ring and the two C-ring stem retainers from the stem hole.
3. Then remove the stem, bushing and seal.
4. Remove the disc from the seat, protecting the disc edge at all times.

   **Note: Valve is provided with the seat bonded to the body and therefore is not easily field replaceable. Please contact your local Bray representative for seat replacement.**

### Assembly –

1. Insert stem seal and bushing.
2. Push stem into the stem hole of the body until the bottom of the stem is flush with the inner top edge of the seat.
3. Install a light coating of silicone or grease on the I.D. of seat. Insert the disc into the seat by lining up the disc holes with the stem holes of the seat.

   **Note: The broached double "D" flats in the disc must be toward the bottom of the valve body.**

4. With a downward pressure and rotating the stem back and forth, push the stem until the stem touches the bottom of the body stem hole.
5. Make certain that when pushing the stem through the disc bottom, the broached flats of stem and disc are aligned.
6. Replace the stem bushing and two stem retainers, then replace the "Spirolox"® retaining ring back into position.
7. Replace handle, manual gear operator or power actuator on the actuator mounting flange.

# SERIES 31H

## RESILIENT SEATED BUTTERFLY VALVES

1. BODY (S30 WAFER STYLE SHOWN)
2. SEAT
3. DISC
4. STEM
5. STEM SEAL
6. STEM BUSHING
7. STEM RETAINER
8. THRUST WASHER
9. RETAINING RING

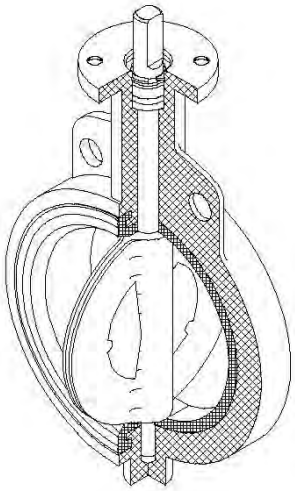

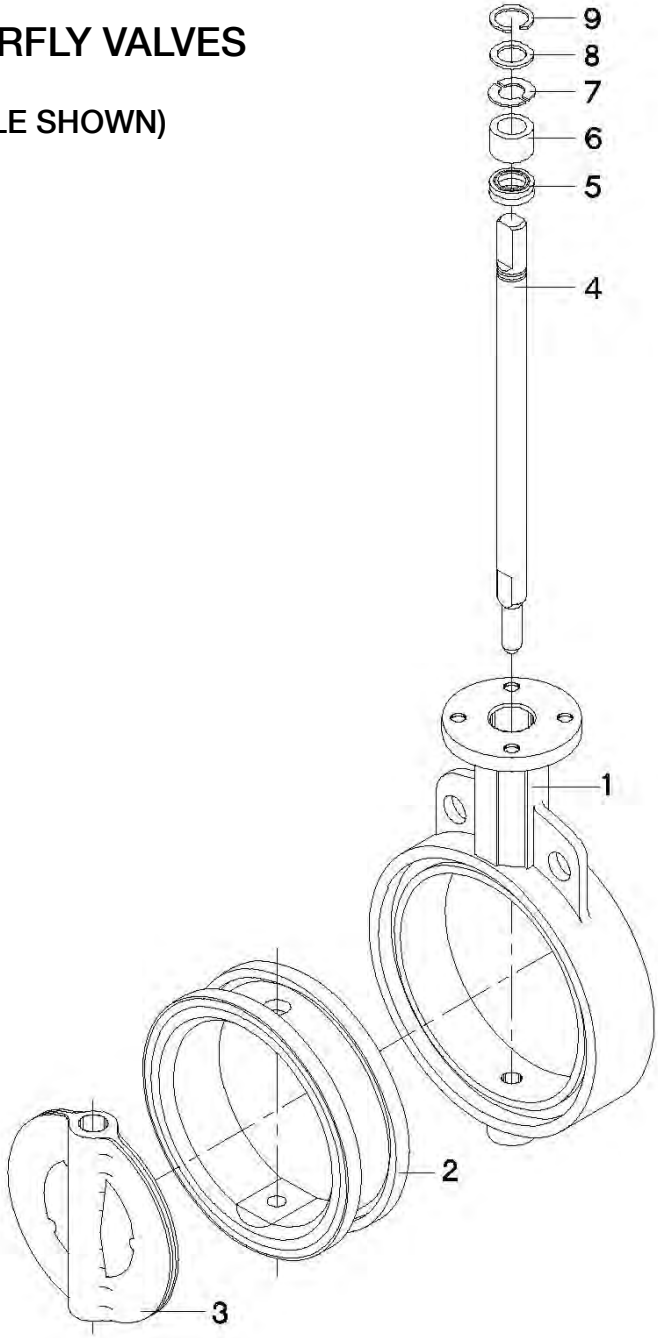

# Appendix F

## Disassembly/Assembly Instructions
## Series 31U Resilient Seated Butterfly Valves

### Disassembly –

1. Remove the handle, gear operator, or power actuator from actuator mounting flange.
2. Remove the "Spirolox"® retaining ring and the two C-ring stem retainers from the stem hole.
3. Then remove the top stem bushing and seal, upper stem and retaining rod.
4. Remove the disc from the seat, protecting the disc edge at all times.
5. The upper and lower stem bearings will remain in the valve behind the seat.

   **Note: The seat is bonded to the body and is not easily field replaceable.**
   **Please contact your local Bray representative for seat replacement.**

### Assembly –

1. Install a light coating of silicone or grease on the I.D. of seat.
2. Insert the lower stem inside the disc before inserting the disc into the seat.
3. Insert the disc into the seat by lining up the disc holes with the stem holes of the seat.
4. Line up the disc using a T-Bar (Allan key style)
5. With a downward pressure and rotating the T-Bar back and forth, push the lower stem until the lower stem touches the bottom of the body stem hole recess.

   **Note: The broached double "D" flats in the disc must be toward the bottom of the valve body.**

6. Make certain that when pushing the stem through the disc bottom, the broached flats of stem and disc are aligned.
7. Insert the spacer bar and upper stem into the disc and valve.
8. Replace the top stem bushing and seal and two stem retainers.
9. Then replace the two "C" ring stem retainers and the "Spirolox"® retaining ring back into position in the top stem hole.

   **Note: It is recommended that a torque and seat test be done to confirm all is in order with the maintenance of the valve.**

10. Replace the handle, manual gear operator or power actuator on the actuator mounting flange.

# SERIES 31U

## RESILIENT SEATED BUTTERFLY VALVES

1. BODY
2. DISC
3. UPPER STEM
4. LOWER STEM
5. SEAT
6. BEARING
7. STEM SEAL
8. STEM BUSHING
9. STEM RETAINER C WASHERS
10. UPPER THRUST WASHER
11. RETAINING RING
12. LOWER THRUST WASHER
13. SPACER
14. SEAL PLUG

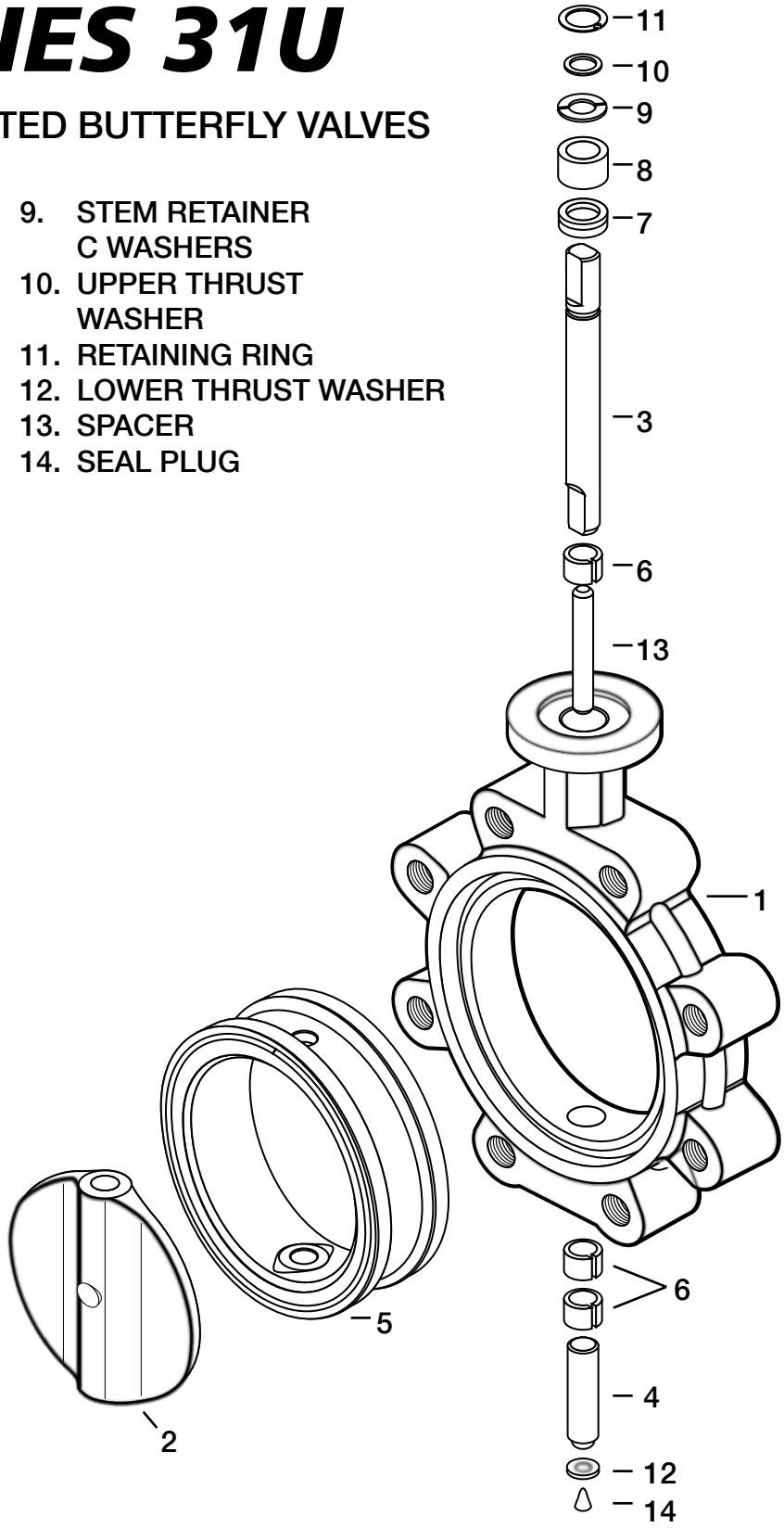

# Appendix G

## Disassembly/Assembly Instructions
## Series 32/33 Resilient Seated Butterfly Valves

### Disassembly –

1. Remove the gear operator or power actuator from the actuator mounting flange.
2. Secure the valve in a horizontal position with the taper-pin nuts facing upward.

**CAUTION**

Prior to removal of the valve stem the valve disc must be secured and supported to insure it does not drop out of the valve body once the stem is removed. Lay the valve down with two wood blocks located under the disc at the 6 o'clock and 12 o'clock positions making sure the blocks are in close contact with the disc but not supporting the valve.

3. Remove the packing gland by removing the retaining screws and sliding the gland off the top of the stem.
4. Remove bottom plate and thrust bearing to expose bottom of stem.
5. Remove nuts and washers from ends of taper pins and drive taper pins out of the disc. Avoid damaging the disc coating or surface when removing taper-pins.
6. Once taper-pins are removed, drive the stem, bushing, and packing out of the valve body through the top.
7. Remove the disc from the seat, protecting disc edge at all times.
8. Push the seat into an oval shape, and then remove the seat from the body.

# Appendix G (Cont'd)

## Disassembly/Assembly Instructions
## Series 32/33 Resilient Seated Butterfly Valves

### Assembly –

1. Replace bottom thrust bearing and plate.
2. Push the seat into an oval and push it into the body with seat stem holes aligned to body stem holes.
3. De-bur taper-pin grooves in the stem.
4. Push stem into stem hole of body until the bottom of the stem is flush with the inner top edge of the seat.

   **Note: The end of the stem containing the keyway must be toward the top of the valve body.**

5. Install a light coating of silicone or grease on the I.D. of the seat.
6. Insert the disc into the seat by lining up the disc hole with the upper stem hole of the seat.
7. With a downward pressure and rotating the stem back and forth, push the stem until the stem touches the bottom of the body stem hole.

   **Note: Make certain that when pushing the stem to the bottom of the body, the taper-pin grooves in the stem line up with the holes in the disc face.**

8. Tap the taper-pins into their holes from the large side of the hole, making sure the pins fit tightly in the hole and allow no movement of the stem in the disc.

   **Note: Ensure that the taper-pin o-rings are in place before completing valve assembly.**

9. Replace the washers and nuts on the ends of the taper-pins.
10. Replace bushing, packing, and packing gland, and then tighten the retaining screws snugly.
11. Replace manual gear operator or power actuator on the actuator mounting flange.

# SERIES 32/33

## RESILIENT SEATED BUTTERFLY VALVES

1 BODY
2 DISC
3 STEM
4 SEAT
5 STEM PACKING
6 STEM BEARING
7 TAPER PIN
8 WASHER
9 NUT
10 O-RING
11 THRUST BEARING
12 BOTTOM PLATE
13 BOTTOM PLATE GASKET
14 BOLT-HEX HEAD
15 KEY
16 STEM RETAINER
17 CAP SCREW
18 ID TAG
19 POP RIVET

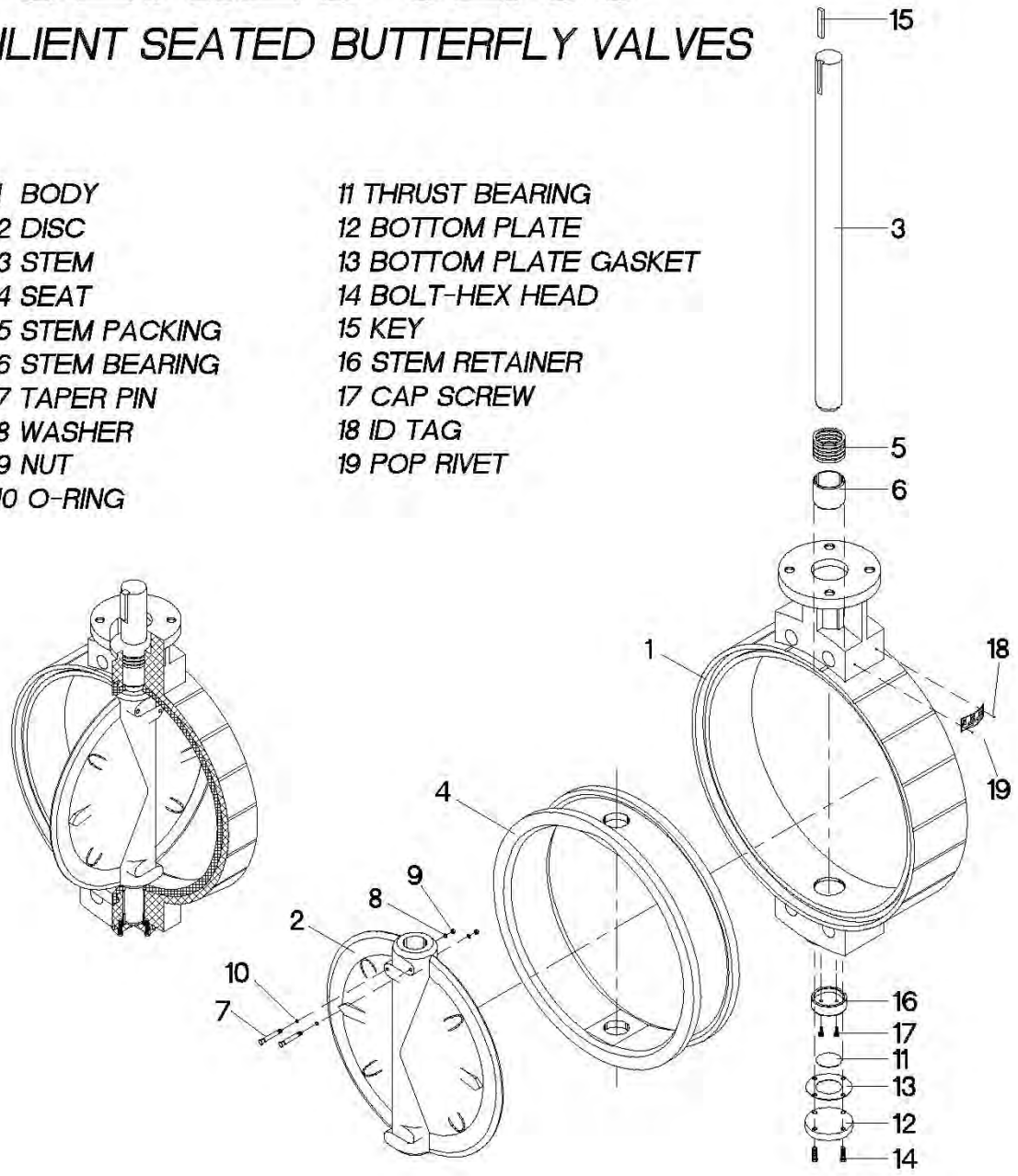

# Appendix H

## Disassembly/Assembly Instructions
## Series 35/36 Resilient Seated Butterfly Valves
## (Taper Pin Disc/Stem Connection)

### Disassembly –

1. Remove the gear operator or power actuator from the actuator mounting flange.
2. Secure the valve in a horizontal position with the taper-pin nuts facing upward.

| | |
|---|---|
| ⚠ **CAUTION** | Prior to removal of the valve stem the valve disc must be secured and supported to insure it does not drop out of the valve body once the stem is removed. Lay the valve down with two wood blocks located under the disc at the 6 o'clock and 12 o'clock positions making sure the blocks are in close contact with the disc but not supporting the valve. |

3. Remove the packing gland by removing the retaining screws and sliding the gland off the top of the stem.
4. Remove bottom plate and thrust bearing to expose bottom of stem.
5. Remove nuts and washers from ends of taper pins and drive taper pins out of the disc. Avoid damaging the disc coating or surface when removing taper-pins.
6. Once taper-pins are removed, drive the stem, bushing, and packing out of the valve body through the top.
7. Remove the disc from the seat, protecting disc edge at all times.
8. Push the seat into an oval shape, and then remove the seat from the body.

   **Note: Valves 54" and larger are provided with the seat bonded to the body and therefore is not easily field replaceable. Please contact your local Bray representative for seat replacement.**

# Appendix H (Cont'd)

## Disassembly/Assembly Instructions
## Series 35/36 Resilient Seated Butterfly Valves
## (Taper Pin Disc/Stem Connection)

### Assembly –

1. Replace bottom thrust bearing and plate.
2. Push the seat into an oval and push it into the body with seat stem holes aligned to body stem holes.

   **Note: Valves 54" and larger are provided with the seat bonded to the body and therefore is not easily field replaceable. Please contact your local Bray representative for seat replacement.**

3. De-bur taper-pin grooves in the stem.
4. Push stem into stem hole of body until the bottom of the stem is flush with the inner top edge of the seat.

   **Note: The end of the stem containing the keyway must be toward the top of the valve body.**

5. Install a light coating of silicone or grease on the I.D. of the seat.
6. Insert the disc into the seat by lining up the disc hole with the upper stem hole of the seat.
7. With a downward pressure and rotating the stem back and forth, push the stem until the stem touches the bottom of the body stem hole.

   **Note: Make certain that when pushing the stem to the bottom of the body, the taper-pin grooves in the stem line up with the holes in the disc face.**

8. Tap the taper-pins into their holes from the large side of the hole, making sure the pins fit tightly in the hole and allow no movement of the stem in the disc.

   **Note: Ensure that the taper-pin o-rings are in place before completing valve assembly.**

9. Replace the washers and nuts on the ends of the taper-pins.
10. Replace bushing, packing, and packing gland, and then tighten the retaining screws snugly.
11. Replace manual gear operator or power actuator on the actuator mounting flange.

# SERIES 35/36

## RESILIENT SEATED BUTTERFLY VALVES
## (Taper Pin Disc/Stem Connection)

1. BODY
2. DISC
3. STEM
4. SEAT
5. STEM PACKING
6. STEM BEARING
7. TAPER PIN
8. WASHER
9. NUT
10. O-RING
11. THRUST BEARING
12. BOTTOM PLATE
13. BOTTOM PLATE GASKET
14. BOLT-HEX HEAD
15. KEY
16. STEM RETAINER
17. CAP SCREW
18. PACKING GLAND
19. BOLT-HEX HEAD
20. ID TAG
21. POP RIVET

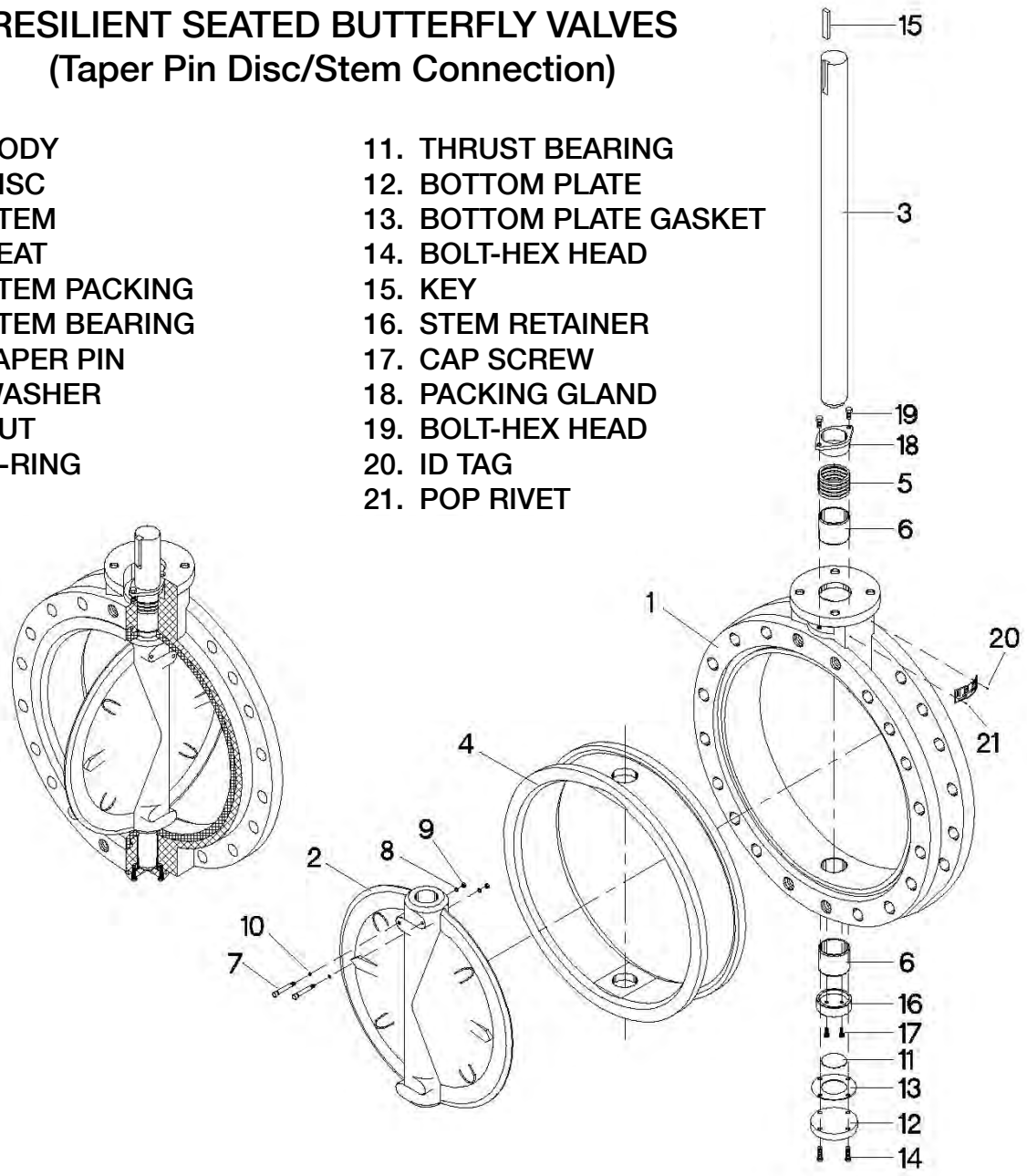

# Appendix I
# Disassembly/Assembly Instructions
# Series 35/36 Resilient Seated Butterfly Valves
# (Internal Spline or Keyed Disc/Stem Connection)

## Disassembly –

1. Remove the gear operator or power actuator from the actuator mounting flange.
2. Secure the valve in a horizontal position.

| | |
|---|---|
| ⚠ **CAUTION** | Prior to removal of the valve stems the valve disc must be secured and supported to insure it does not drop out of the valve body once the stems are removed. Lay the valve down with two wood blocks located under the disc at the 6 o'clock and 12 o'clock positions making sure the blocks are in close contact with the disc but not supporting the valve. |

**3.** Removal of the lower valve stem:

   a. Remove the bottom plate screws, bottom plate, bottom plate gasket and thrust bearing.

   b. Remove the locking nut from the tie bolt.

   c. Remove the stem retainer.

   d. Secure a hoist to the lower stem (end is imperial threaded).

   e. Then use the hoist to remove the lower stem from the valve body.

   f. Remove the stem bearing.

4. Removal of the upper valve stem:

   a. Remove the packing gland by removing the retaining screws and sliding the gland off the top of the stem.

   b. Secure a hoist to the upper stem (end is imperial threaded).

   c. Then use the hoist to remove the upper stem including the tie bolt from the valve body.

5. Removal of the valve disc:

   a. Remove the wood blocks noted above from below the disc.

   b. Using a rubber hammer, pound one area of the disc (ex. 12 o'clock position) repeatedly until the disc clears the face of the valve body.

# Appendix I (Cont'd)
# Disassembly/Assembly Instructions
# Series 35/36 Resilient Seated Butterfly Valves
# (Internal Spline or Keyed Disc/Stem Connection)

## Disassembly –

6. Removal of packing and bearings:
   a. Remove the stem packing.
   b. Use a slotted screwdriver to carefully remove the upper and lower stem bearings.
7. Removal of the valve seat:

**Note: Valves 54" and larger are provided with the seat bonded to the body and therefore is not easily field replaceable. Please contact your local Bray representative for seat replacement.**

**WARNING**

a. Set the valve body in an upright position and secure it in a floor vice capable of handling the weight of the valve body and seat.

**Note: Be sure to not clamp the seat in the vice.**

b. Insert a slotted screwdriver into the space between the body and the seat on the face of the valve at the 12 o'clock position.
c. Carefully leverage the seat away from the body.
d. Push the seat into an oval shape and remove the seat from the body.

## Assembly –

1. Installation of the valve seat:

**Note: Valves 54" and larger are provided with the seat bonded to the body and therefore is not easily field replaceable. Please contact your local Bray representative for seat replacement.**

**WARNING**

a. Set the valve body in an upright position and secure it in a floor vice capable of handling the weight of the valve body and seat.

**Note: Be sure to not clamp the seat in the vice.**

b. Check to assure the interior surface of the valve body is clean.
c. Install a light coating of silicone lubricant on the interior surface of the valve body.
d. Push the seat into an oval and push it into the body with seat stem holes aligned to the body stem holes.

# Appendix I (Cont'd)
# Disassembly/Assembly Instructions
# Series 35/36 Resilient Seated Butterfly Valves
# (Internal Spline or Keyed Disc/Stem Connection)

## Assembly –

2. Installation of the valve disc:

   **Note: Before installing the disc, check to assure the upper and lower stems are matched to the upper and lower stem holes in the disc.**

   a. With the valve still in the vice in a vertical position, hoist the upper stem with the splined end or the double keyed end pointing upward.

   b. Push the upper stem into the stem hole of the upper body until the bottom of the stem exceeds the upper stem hole of the seat by 20-50 mm.

   c. Apply a light coating of silicone or grease on the I.D. of the seat.

   d. Insert the disc into the seat with the splined end or the double keyed end up.

   e. Push the disc into the seat while inserting the upper stem into the upper stem hole in the disc.

   f. Adjust the disc to assure the lower stem hole of the disc is properly aligned with the lower body stem hole.

3. Installation of the lower stem:

   a. Close the valve so that the disc is inside the edge of the seat.

   b. Carefully place the valve in a horizontal position assuring that there is no damage to the body and disc coatings and disc edge.

   c. Insert the stem bearing into the bottom stem hole of the body.

   d. Insert the lower stem into the body and disc.

      **Note: The cone-shaped end of the lower stem should be toward the center of the disc.**

# Appendix I (Cont'd)
# Disassembly/Assembly Instructions
# Series 35/36 Resilient Seated Butterfly Valves
# (Internal Spline or Keyed Disc/Stem Connection)

**Assembly –**

4. Installation of the upper stem:

| | |
|---|---|
| **CAUTION** | a. Hoist the valve to an angle and secure it (be careful not to go to high so the lower stem does not drop out). |

   b. Remove the upper stem from the valve.

   c. Screw the tie bolt with lock nut to the splined or the double keyed end of the upper stem, tighten the lock nut and insert the upper stem into the valve with the tie bolt end first.

   **Note: The tie bolt will go through the disc and reach to the bottom of the valve**

   **Note: During this step, the keyway of the upper stem should be vertical to the front face of the valve.**

5. Installation of packing and bearings (upper valve stem):

   a. Insert the stem bearing into the top hole of the body followed by the stem packing and packing gland follower.

   b. Use two hexagon bolts to fasten the packing gland.

6. Installation of packing and bearings (lower valve stem):

   a. Insert the stem retainer into the bottom hole of the body using a nut to fasten it.

   b. Install the locking nut on the tie bolt.

   c. Install the thrust bearing, bottom plate gasket and bottom plate follower.

   d. Use four hexagon bolts to fasten the bottom plate tightly.

# *SERIES 35/36*

## RESILIENT SEATED BUTTERFLY VALVES
## (Internal Spline Valve)

1. BODY
2. DISC
3. UPPER STEM
4. SEAT
5. KEY
6. TIE BOLT
7. STEM BEARING
8. STEM PACKING
9. PACKING GLAND FOLLOWER
10. PACKING GLAND
11. BOLT-HEX HD
12. LOWER STEM
13. STEM RETAINER
14. HEX NUT
15. THRUST BEARING
16. BOTTOM PLATE GASKET
17. BOTTOM PLATE
18. BOLT-HEX HD
19. ID TAG
20. POP RIVET

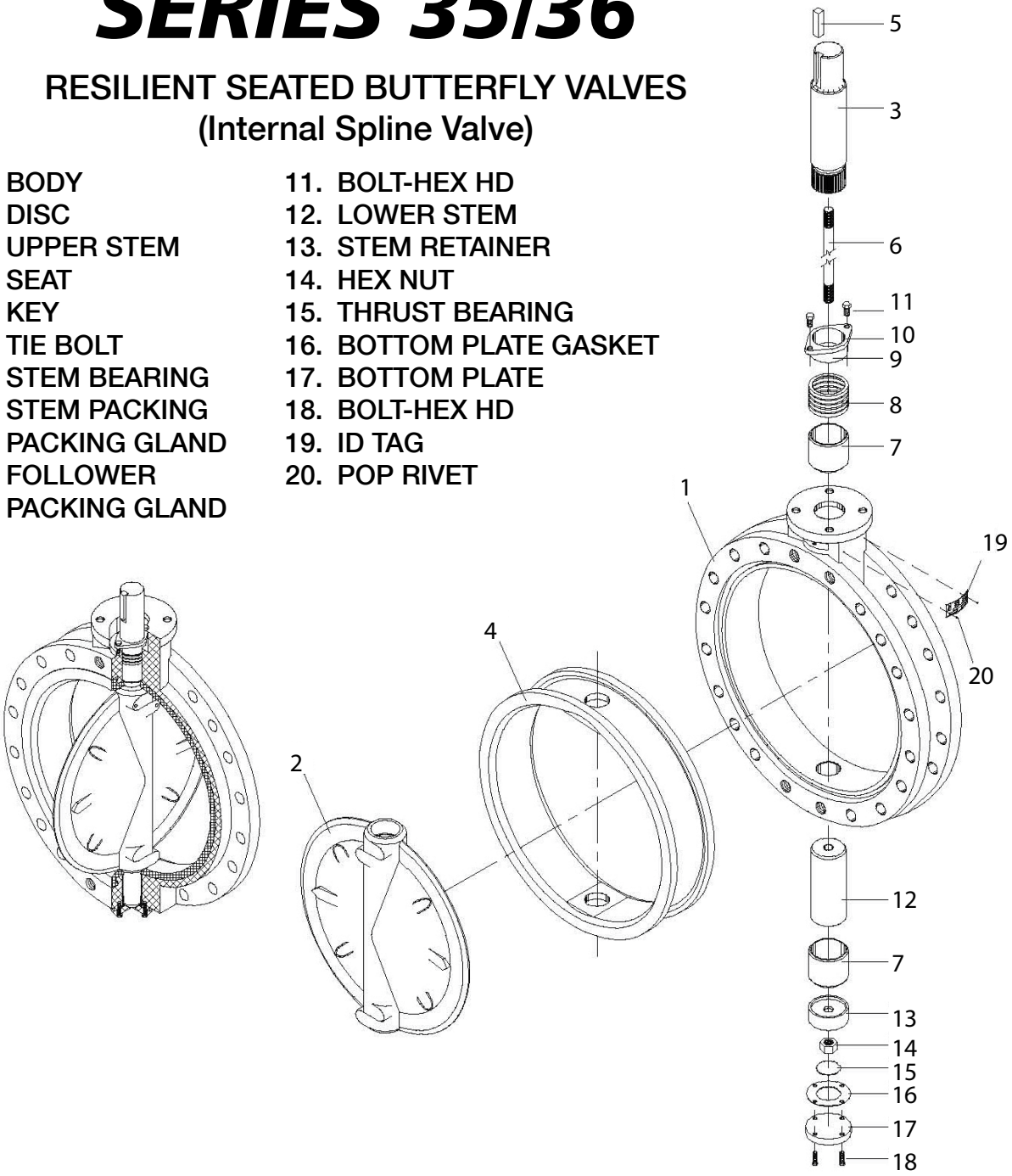

# SERIES 35/36

## RESILIENT SEATED BUTTERFLY VALVES
## (Internal Keyed Valve)

1. BODY
2. DISC
3. UPPER STEM
4. SEAT
5. KEY
6. TIE BOLT
7. STEM BEARING
8. STEM PACKING
9. PACKING GLAND FOLLOWER
10. PACKING GLAND
11. BOLT-HEX HEAD
12. LOWER STEM
13. STEM RETAINER
14. HEX NUT
15. THRUST BEARING
16. BOTTOM PLATE GASKET
17. BOTTOM PLATE
18. BOLT-HEX HEAD
19. ID TAG
20. POP RIVET

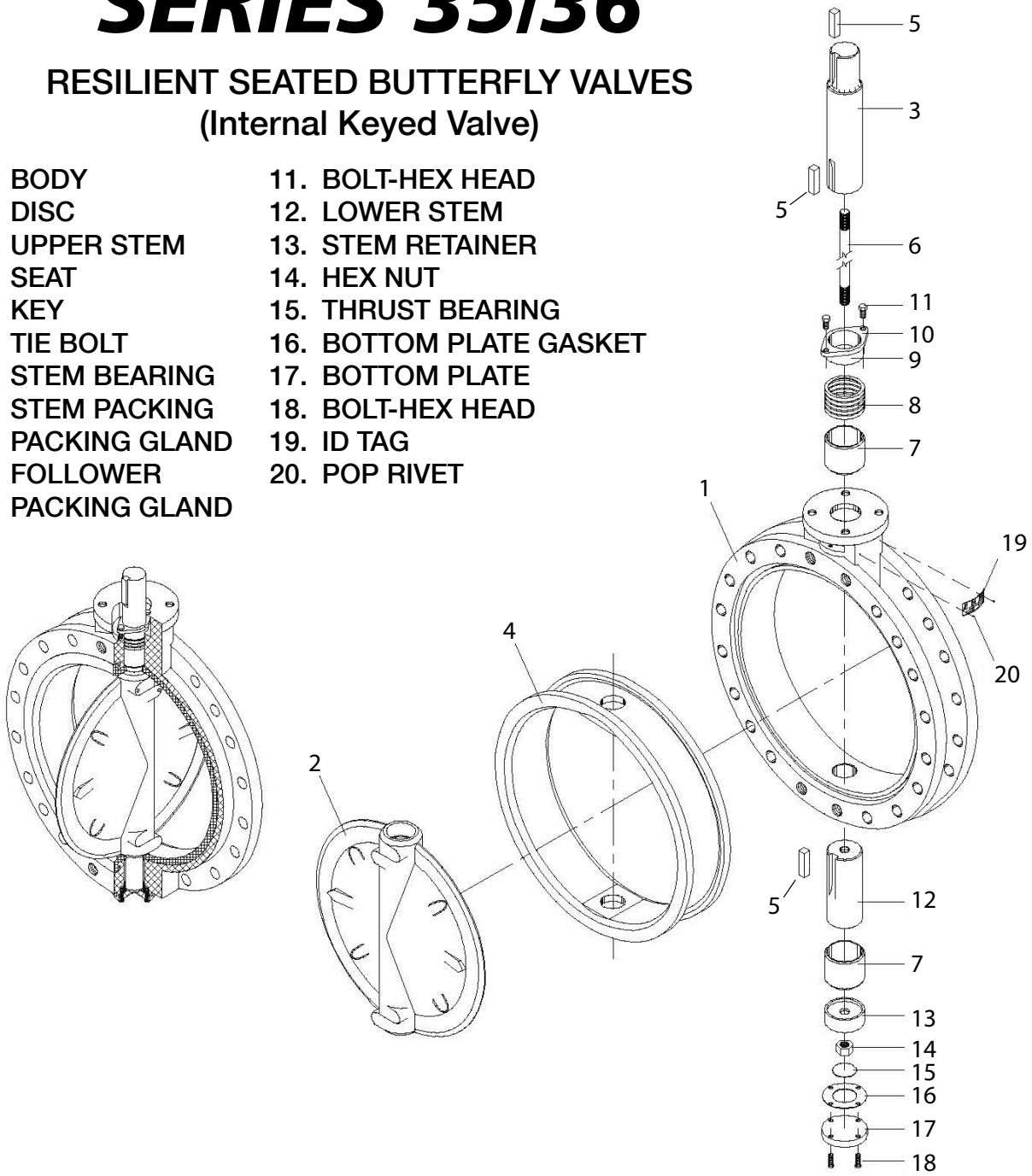

# Appendix J

## Disassembly/Assembly Instructions
## Series 36H Resilient Seated Butterfly Valves

### Disassembly –

1. Remove the gear operator or power actuator from the actuator mounting flange.
2. Secure the valve in a horizontal position with the taper-pin nuts facing upward.

| | |
|---|---|
| ⚠ **CAUTION** | Prior to removal of the valve stem the valve disc must be secured and supported to insure it does not drop out of the valve body once the stem is removed. Lay the valve down with two wood blocks located under the disc at the 6 o'clock and 12 o'clock positions making sure the blocks are in close contact with the disc but not supporting the valve. |

3. Remove the packing gland by removing the retaining screws and sliding the gland off the top of the stem.
4. Remove bottom plate and thrust bearing to expose bottom of stem.
5. Remove nuts and washers from ends of taper pins and drive taper pins out of the disc. Avoid damaging the disc coating or surface when removing taper-pins.
6. Once taper-pins are removed, drive the stem, bushing, and packing out of the valve body through the top.
7. Remove the disc from the seat, protecting disc edge at all times.

**Note: Valve is provided with the seat bonded to the body and therefore is not easily field replaceable. Please contact your local Bray representative for seat replacement.**

# Appendix J (Cont'd)

## Disassembly/Assembly Instructions
## Series 36H Resilient Seated Butterfly Valves

### Assembly –

1. Replace bottom thrust bearing and plate.
2. De-bur taper-pin grooves in the stem.
3. Push stem into stem hole of body until the bottom of the stem is flush with the inner top edge of the seat.

   **Note: The end of the stem containing the keyway must be toward the top of the valve body.**

4. Install a light coating of silicone or grease on the I.D. of the seat.
5. Insert the disc into the seat by lining up the disc hole with the upper stem hole of the seat.
6. With a downward pressure and rotating the stem back and forth, push the stem until the stem touches the bottom of the body stem hole.

   **Note: Make certain that when pushing the stem to the bottom of the body, the taper-pin grooves in the stem line up with the holes in the disc face.**

7. Tap the taper-pins into their holes from the large side of the hole, making sure the pins fit tightly in the hole and allow no movement of the stem in the disc.

   **Note: Ensure that the taper-pin o-rings are in place before completing valve assembly.**

8. Replace the washers and nuts on the ends of the taper-pins.
9. Replace bushing, packing, and packing gland, and then tighten the retaining screws snugly.
10. Replace manual gear operator or power actuator on the actuator mounting flange.

# *SERIES 36H*

## RESILIENT SEATED BUTTERFLY VALVES

1. BODY
2. DISC
3. STEM
4. SEAT
5. STEM PACKING
6. STEM BEARING
7. TAPER PIN
8. WASHER
9. NUT
10. O-RING
11. THRUST BEARING
12. BOTTOM PLATE
13. BOTTOM PLATE GASKET
14. BOLT-HEX HEAD
15. KEY
16. STEM RETAINER
17. CAP SCREW
18. PACKING GLAND
19. BOLT-HEX HEAD
20. ID TAG
21. POP RIVET

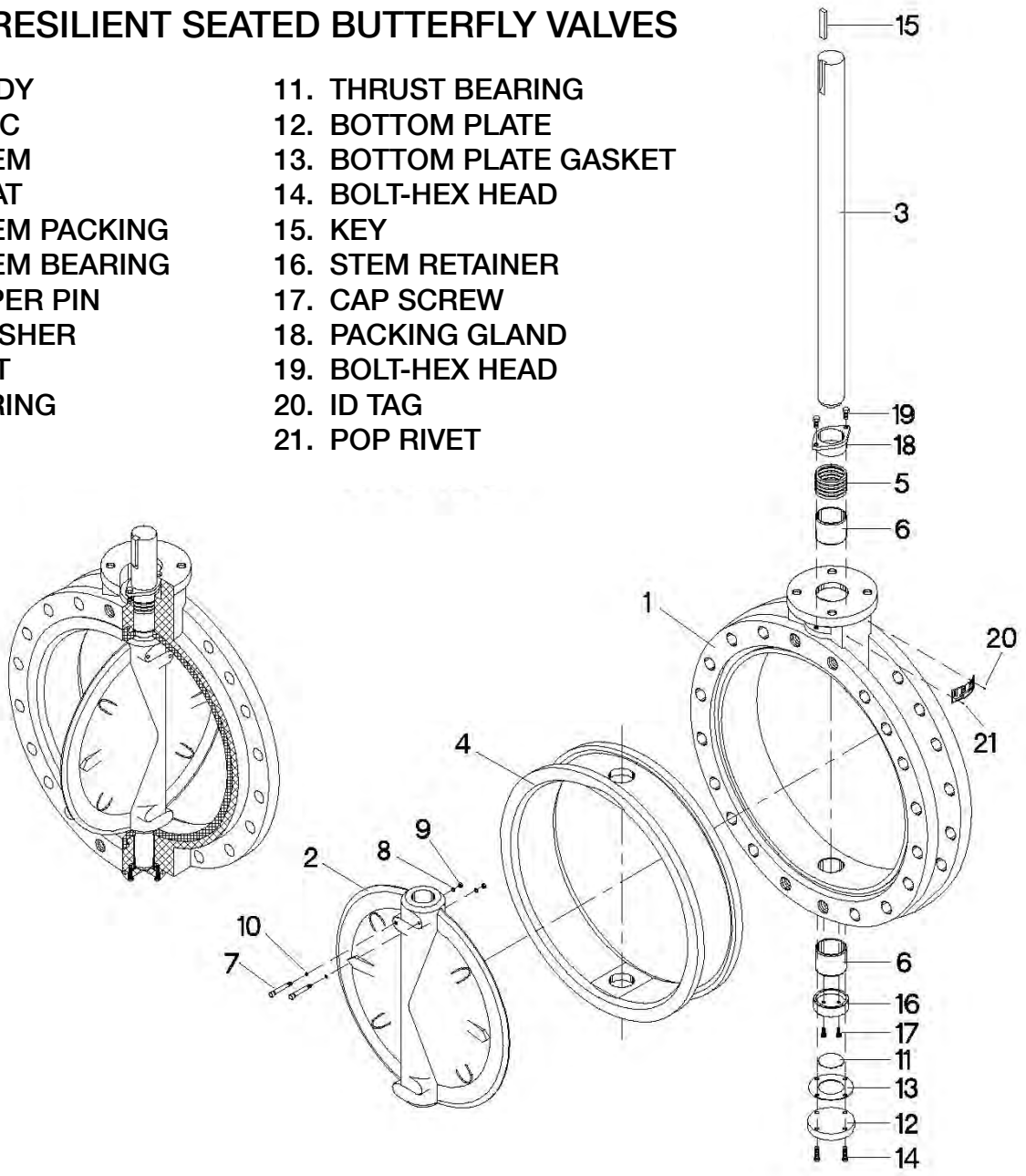

Bray CONTROLS
A Division of BRAY INTERNATIONAL, Inc.
13333 Westland East Blvd. Houston, Texas 77041
281/894-5454 FAX 281/894-9499 www.bray.com

Bray® is a registered trademark of
BRAY INTERNATIONAL, Inc.
© 2012 Bray International. All rights reserved.
OM-RSBFV-001 08-2012

# Butterfly Valves

**SERIES 700**

LEVER HANDLE

Victaulic Series 700 butterfly valves are designed for bubble-tight shut-off to 200 psi/1400 kPa. Two piece stem permits narrow disc design for low pressure drop performance and is self-centering for positive shut-off. Valves are available with liners molded from EPDM for water service to +230°F/+110°C or nitrile for oil services to +180°F/+82°C. Refer to Liner/Disc Selection for general service recommendations.

Series 700 butterfly valves are available in 1 ½ – 6"/40 – 150 mm sizes. The body is fully rubber lined, and the valve housing is cast of durable ductile iron. Standard disc is aluminum bronze (also available in 316 stainless steel), with a two position cast handle with padlock feature as the standard operator.

Victaulic recommends the use of Style 07 Zero-Flex®/Style 107 QuickVic rigid couplings with the Series 700 butterfly valve to eliminate joint deflection or valve rotation at the coupling connection to the piping system.

## MATERIAL SPECIFICATIONS

**Housing:** Ductile iron conforming to ASTM A-536, grade 65-45-12, painted black.

**Body:** Carbon steel, elastomer lined.

**Seat/Liner:** (specify choice*)

- **Grade "E" EPDM**
  EPDM (Green color code). Temperature range –30°F to +230°F/–34°C to +110°C. Recommended for cold and hot water service within the specified temperature range plus a variety of dilute acids, oil-free air and many chemical services. UL classified in accordance with ANSI/NSF 61 for cold +86°F/+30°C and hot 180°F/+82°C potable water service. NOT RECOMMENDED FOR PETROLEUM SERVICES.

- **Grade "T" nitrile**
  Nitrile (Orange color code). Temperature range –20°F to +180°F/–29°C to +82°C. Recommended for petroleum products, air with oil vapors, vegetable and mineral oils within the specified temperature range. Not recommended for hot water services over +150°F/+66°C or for hot dry air over +140°F/+60°C.

* Services listed are General Service Recommendations only. It should be noted that there are services for which these gaskets are not recommended. Reference should always be made to the latest Victaulic Liner/Disc Selection for specific service recommendations and for a listing of services which are not recommended.

**Stem-Upper/Lower:** 416 stainless steel

**Disc:** Aluminum bronze
- **Optional:** 316 stainless steel

**Handle:** Cast ductile iron

**O-ring:** (Same as seat)

**Track Bolts:** Steel, Electroplated

**Nuts:** Steel, Electroplated

| JOB OWNER | CONTRACTOR | ENGINEER |
|---|---|---|
| System No. _____ | Submitted By _____ | Spec Sect _____ Para _____ |
| Location _____ | Date _____ | Approved _____ |
| | | Date _____ |



VICTAULIC IS A REGISTERED TRADEMARK OF VICTAULIC COMPANY. © 2012 VICTAULIC COMPANY. ALL RIGHTS RESERVED. .

# Butterfly Valves

**SERIES 700**

## DIMENSIONS

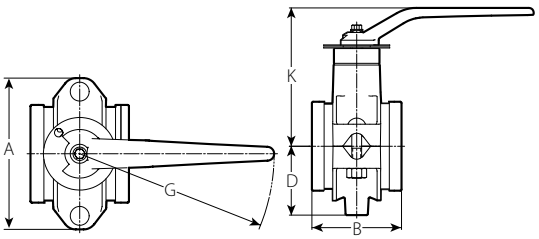


**1 ½ – 6"/40 – 150 MM (TYPICAL)**

## STANDARD PROFILE BFV

| Size | | Dimensions – Inches/millimeters | | | | | Aprx. Weight Each |
|---|---|---|---|---|---|---|---|
| Nominal Size Inches/mm | Actual Outside Dia. Inches/mm | A | B | D | G | K | Lbs./kg |
| 1 ½<br>40 | 1.900<br>48.3 | 3.63<br>92.2 | 3.38<br>85.9 | 1.63<br>41.4 | 5.50<br>139.7 | 4.44<br>112.8 | 2.8<br>1.3 |
| 2<br>50 | 2.375<br>60.3 | 4.06<br>103.1 | 3.19<br>81.0 | 1.87<br>47.5 | 5.50<br>139.7 | 4.71<br>119.6 | 3.3<br>1.5 |
| 2 ½<br>65 | 2.875<br>73.0 | 4.87<br>123.7 | 3.81<br>96.8 | 2.50<br>63.5 | 7.00<br>177.8 | 5.31<br>134.9 | 6.4<br>2.9 |
| 3<br>80 | 3.500<br>88.9 | 5.62<br>142.7 | 3.81<br>96.8 | 2.75<br>69.9 | 7.00<br>177.8 | 5.62<br>142.7 | 6.8<br>3.1 |
| 4<br>100 | 4.500<br>114.3 | 7.00<br>177.8 | 4.56<br>115.8 | 3.50<br>88.9 | 9.00<br>228.6 | 6.69<br>179.9 | 12.1<br>5.5 |
| 5<br>125 | 5.563<br>141.3 | 8.50<br>215.9 | 5.81<br>147.6 | 4.00<br>101.6 | 12.00<br>304.8 | 8.25<br>209.6 | 26.1<br>11.8 |
| 6<br>150 | 6.625<br>168.3 | 9.50<br>241.3 | 5.81<br>147.6 | 4.50<br>114.3 | 12.00<br>304.8 | 8.78<br>223.0 | 32.5<br>14.7 |
| 165.1 mm | 6.500<br>165.1 | 9.50<br>241.3 | 5.81<br>147.6 | 4.50<br>114.3 | 12.00<br>304.8 | 8.78<br>223.0 | 30.5<br>13.8 |



VICTAULIC IS A REGISTERED TRADEMARK OF VICTAULIC COMPANY. © 2012 VICTAULIC COMPANY. ALL RIGHTS RESERVED.

# Butterfly Valves

**SERIES 700**

## PERFORMANCE

$C_V$ values for flow of water at +60°F/+16°C with single disc position is shown in the table below.

Formulas for $C_V$ Values:

$$\Delta P = \frac{Q^2}{C_v^2}$$

$$Q = C_v \times \sqrt{\Delta P}$$

**Where:**
Q = Flow (GPM)
ΔP = Pressure Drop (psi)
$C_v$ = Flow Coefficient

| Size | | FLOW COEFFICIENTS – $C_V$ |
|---|---|---|
| | | Disc Position (Degrees open) |
| | | 90 |
| Nominal Size Inches/mm | Actual Outside Diameter Inches/mm | |
| 1 ½<br>40 | 1.900<br>48.3 | 36 |
| 2<br>50 | 2.375<br>60.3 | 70 |
| 2 ½<br>65 | 2.875<br>73.0 | 120 |
| 3<br>80 | 3.500<br>88.9 | 180 |
| 4<br>100 | 4.500<br>114.3 | 520 |
| 5<br>125 | 5.563<br>141.3 | 800 |
| 6<br>150 | 6.625<br>168.3 | 1300 |
| 165.1 mm | 6.500<br>165.1 | 1300 |

## FLOW CHARACTERISTICS

The chart below expresses the flow of water at 65°F/18°C through a full open valve.

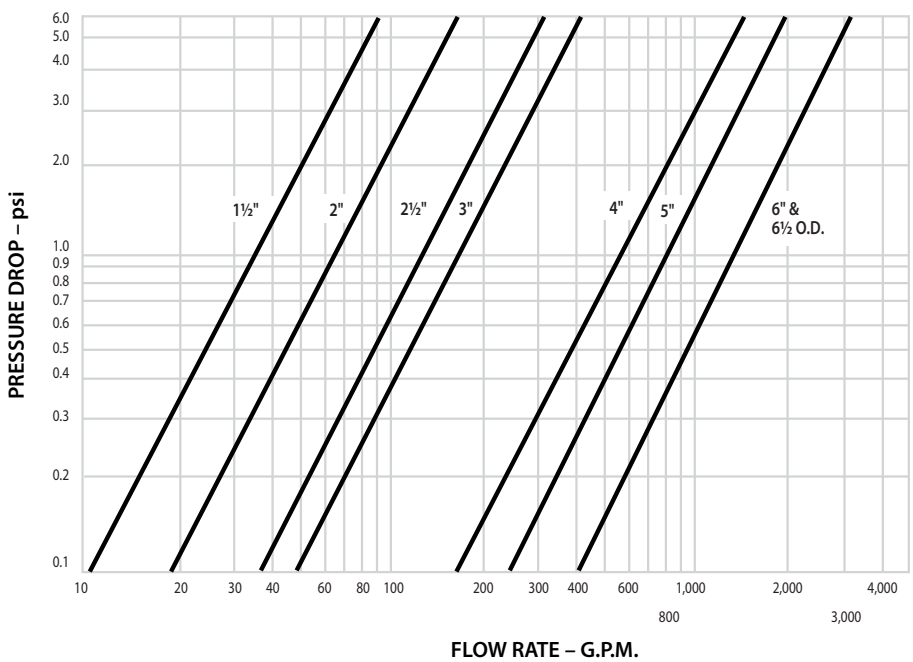




VICTAULIC IS A REGISTERED TRADEMARK OF VICTAULIC COMPANY. © 2012 VICTAULIC COMPANY. ALL RIGHTS RESERVED.

# Butterfly Valves

**SERIES 700**

**TYPICAL SPECIFICATIONS**

Grooved end butterfly valves as manufactured by Victaulic Company, shall be incorporated wherever possible, in lieu of wafer, lug, or flanged-type valves. Valves shall have grooved ends designed to accept grooved mechanical couplings (from the same manufacturer) without field preparation. Valves shall have operating conditions not to exceed –30°F to +230°F/–34°C to +110°C temperature range according to the valve lining selected (refer to manufacturer's data) and must provide service from 29.9 inches of mercury vacuum service through 200 psi/1400 kPa. Shut-off must be bubble-tight to full pressure rating and provide dead-end service.

**WARRANTY**

Refer to the Warranty section of the current Price List or contact Victaulic for details.

**NOTE**

This product shall be manufactured by Victaulic or to Victaulic specifications. All products to be installed in accordance with current Victaulic installation/assembly instructions. Victaulic reserves the right to change product specifications, designs and standard equipment without notice and without incurring obligations.


VICTAULIC IS A REGISTERED TRADEMARK OF VICTAULIC COMPANY. © 2012 VICTAULIC COMPANY. ALL RIGHTS RESERVED.

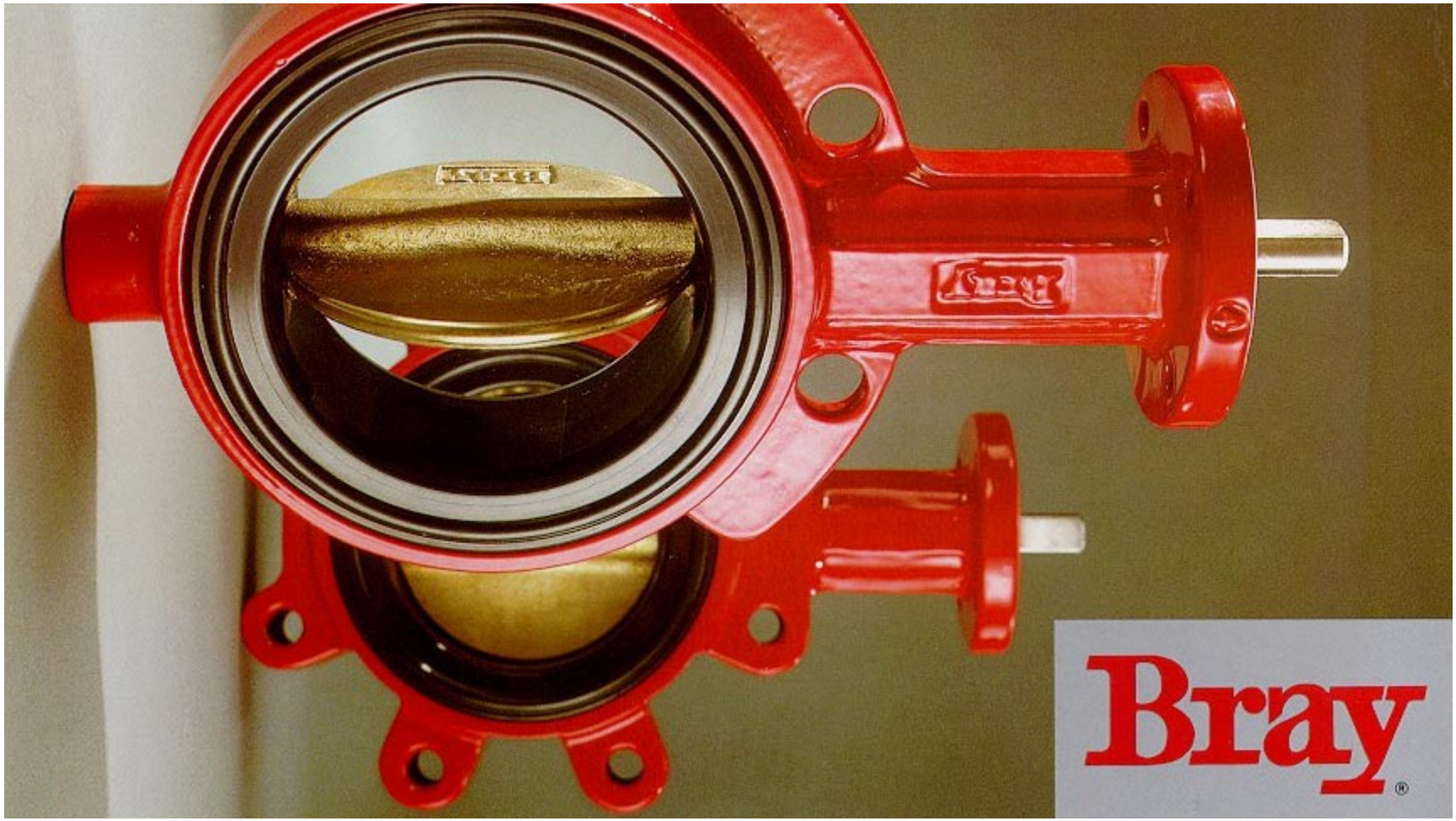


The
High
Performance
Company

# *BUTTERFLY VALVES*

## *RESILIENT SEATED*

**SERIES 30/31** Wafer/Lug
2”-20” (50mm-500mm)

# SERIES 30/31

2”-20” (50mm-500mm) Bray® Controls is proud to offer a high quality line of butterfly valves to meet the requirements of today’s market. Combining years of field experience, research and development, Bray has designed many unique features in the Series 30/31 not previously available. The results are longer service life, greater reliability, ease of parts replacement and interchangeability of components.

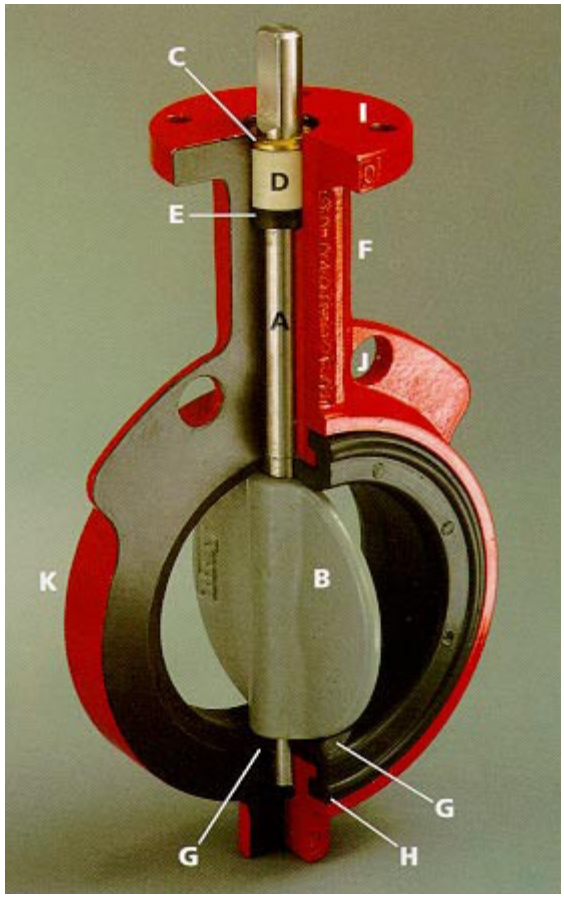


## DISC AND STEM CONNECTION (A)

Features a high-strength through stem design. The close tolerance, double "D" connection that drives the valve disc is an exclusive feature of the Bray valve. It eliminates stem retention components being exposed to the line media, such as disc screws

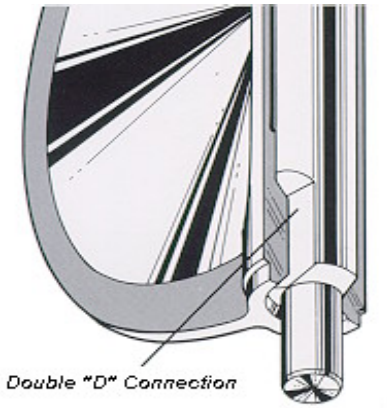


and taper pins, which commonly result in leak paths, corrosion, and vibration failures. Disc screws or taper pins, due to wear and corrosion, often require difficult machining for disassembly. Disassembly of the Bray stem is just a matter of pulling the stem out of the disc. Without fasteners obstructing the line flow, the Series 30/31 Cv values are higher than many other valves, turbulence is reduced, and pressure recovery is increased. The stem ends and top mounting flange are standardized for interchangeability with Bray actuators.

## DISC (B)

Casting is spherically machined, hand polished to provide a bubble-tight shut off, minimum torque, and longer seat life. The disc O.D. clearance is designed to work with all standard piping.

## "SPIROLOX*" RETAINING RING (C)

The stem is retained in the body by means of a unique Stainless Steel “Spirolox®” retaining ring, a thrust washer and two C-rings, manufactured from brass as standard, stainless steel upon request. The retaining ring may be easily removed with a standard hand tool. The stem retaining assembly prevents unintentional removal of the stem during field service.

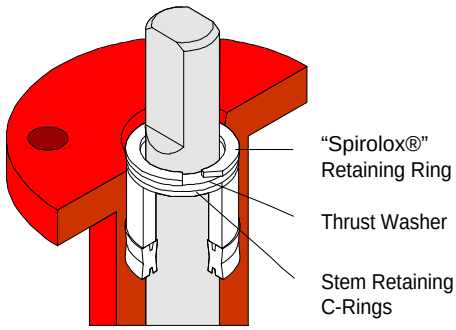


*"Spirolox®" designation is a registered trademark of TRW, Inc.

## STEM BUSHING (D)

Non-Corrosive, heavy duty acetal bushing absorbs actuator side thrusts.

## STEM SEAL (E)

Double "U" cup seal design is self-adjusting and gives positive sealing in both directions. Prevents external substances from entering stem bore.

## NECK (F)

Extended neck length allows for 2" of piping insulation and is easily accessible for mounting actuators.

## PRIMARY AND SECONDARY SEALS (G)

The Primary Seal is achieved by an interference fit of the molded seat flat with the disc hub. The Secondary Seal is created because the stem diameter is greater than the diameter of the seat stem hole. These seals prevent line media from coming in contact with the stem or body.

## BRAY UNIQUE SEAT DESIGN (H)

One of the valve's key elements is Bray's unique "*Tongue-and-Groove*" seat design. This resilient seat features lower torque than many valves on the market today and provides complete isolation of flowing media from the body. The tongue-and-groove seat to body retention method is superior to traditional designs, making field replacement simple and fast. The seat is specifically designed to seal with slip-on or weld-neck flanges. The seat features a molded O-ring which eliminates the use of flange gaskets. An important maintenance feature is that all resilient seats for Bray butterfly valves Series 20, 21, 30, 31, 34 are completely interchangeable.

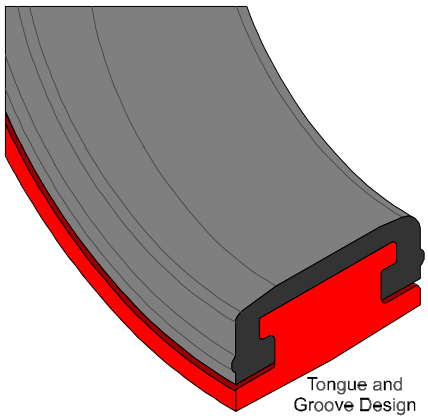

# SERIES 30/31

## ACTUATOR MOUNTING FLANGE AND STEM CONNECTION (I)

Universally designed to ISO 5211 for direct mounting of Bray® power actuators and manual operators.

## FLANGE LOCATING HOLES (J)

Provides quick and proper alignment during installation.

## BODY (K)

One-piece wafer or lug style. Epoxy coating for excellent corrosion resistance. Bray valve bodies meet ANSI 150 pressure ratings for hydrostatic shell test requirements.

## DESIGN FEATURES

Bray's Series 30 valve is a wafer version with flange locating holes, and the Series 31 is the companion lug version for dead-end service and other flange requirements. All Bray valves are tested to 110% of full pressure rating before shipment.
A major design advantage of Bray valve product lines is international compatibility. The same valve is compatible with most world flange standards - ANSI Class 125/150, BS 10 Tables D&E, BS4504 NP 10/16, DIN ND10/16, AS 2129 and JIS 10. In addition, the valves are designed to comply with ISO 5752 face-to-face and ISO 5211 actuator mounting flanges. Therefore, one valve design can be used in many different world markets. Due to a modular concept of design, all Bray® handles, manual gear operators and pneumatic and electric actuators mount directly to Bray valves. No brackets or adapters are required. Bray interchangeability and compatibility offers you the best in uniformity of product line and low-cost performance in the industry today.

## EPOXY COATING CORROSION PROTECTION

Bray's standard product offers valve bodies with an epoxy coating, providing excellent corrosion and wear resistance to the valve's surface. The Bray epoxy coating is a hard, high gloss red finish.

- Chemical Resistance - resists a broad range of chemicals including: dilute aqueous acids and alkalies, petroleum solvents, alcohols, greases and oils. Offers outstanding resistance to humidity and water.
- Weatherability - outdoor tested resistant to ultra-violet radiation.
- Abrasion Resistance - excellent resistance to abrasion.
- Impact Resistance - withstands impact without chipping or cracking.

## NYLON 11 COATING

Optionally available for valve bodies where outstanding protection and performance is needed. A thermoplastic produced from a vegetable base, this coating is inert to fungus growth and molds. Nylon 11 is *USDA Approved*, as well as certified to ANSI/NSF 61 for water service.

- Corrosion Resistance - superior resistance to a broad range of chemical environments. Salt spray tested in excess of 2,000 hours and seawater immersion tested for over 10 years without corrosion to metal substrates. Nylon 11 features a very low coefficient of friction and excellent resistance to impact and ultra-violet radiation.

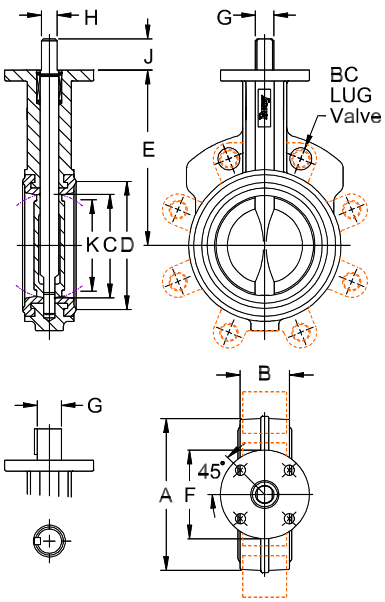


## DIMENSIONS SERIES 30 WAFER

| Valve Size | | | | | | | | Mtg Flange Drilling | | | | | | |
|---|---|---|---|---|---|---|---|---|---|---|---|---|---|---|
| ins | mm | A | B | C | D | E | F | BC | No. Holes | Hole Dia. | G | H | J | K |
| 2 | 50 | 3.69 | 1.62 | 2.00 | 2.84 | 5.50 | 3.54 | 2.76 | 4 | .39 | .55 | .39 | 1.25 | 1.32 |
| 2 1/2 | 65 | 4.19 | 1.75 | 2.50 | 3.34 | 6.00 | 3.54 | 2.76 | 4 | .39 | .55 | .39 | 1.25 | 1.91 |
| 3 | 80 | 4.88 | 1.75 | 3.00 | 4.03 | 6.25 | 3.54 | 2.76 | 4 | .39 | .55 | .39 | 1.25 | 2.55 |
| 4 | 100 | 6.06 | 2.00 | 4.00 | 5.16 | 7.00 | 3.54 | 2.76 | 4 | .39 | .63 | .43 | 1.25 | 3.57 |
| 5 | 125 | 7.12 | 2.12 | 5.00 | 6.16 | 7.50 | 3.54 | 2.76 | 4 | .39 | .75 | .51 | 1.25 | 4.63 |
| 6 | 150 | 8.12 | 2.12 | 5.75 | 7.02 | 8.00 | 3.54 | 2.76 | 4 | .39 | .75 | .51 | 1.25 | 5.45 |
| 8 | 200 | 10.50 | 2.50 | 7.75 | 9.47 | 9.50 | 5.91 | 4.92 | 4 | .57 | .87 | .63 | 1.25 | 7.45 |
| 10 | 250 | 12.75 | 2.50 | 9.75 | 11.47 | 10.75 | 5.91 | 4.92 | 4 | .57 | 1.18 | .87 | 2.00 | 9.53 |
| 12 | 300 | 14.88 | 3.00 | 11.75 | 13.47 | 12.25 | 5.91 | 4.92 | 4 | .57 | 1.18 | .87 | 2.00 | 11.47 |

## SERIES 31 LUG

| Lug Bolting Data | | |
|---|---|---|
| BC | No. Holes | Thrds UNC-2B |
| 4.75 | 4 | 5/8-11 |
| 5.50 | 4 | 5/8-11 |
| 6.00 | 4 | 5/8-11 |
| 7.50 | 8 | 5/8-11 |
| 8.50 | 8 | 3/4-10 |
| 9.50 | 8 | 3/4-10 |
| 11.75 | 8 | 3/4-10 |
| 14.25 | 12 | 7/8-9 |
| 17.00 | 12 | 7/8-9 |

| Valve Size | | | | | | | | Mtg Flange Drilling | | | | | | |
|---|---|---|---|---|---|---|---|---|---|---|---|---|---|---|
| ins | mm | A | B | C | D | E | F | BC | No. Holes | Hole Dia. | G | H | KEY SIZE | K |
| 14 | 350 | 17.05 | 3.00 | 13.25 | 15.28 | 13.62 | 5.91 | 4.92 | 4 | .57 | 1.38 | 2.00 | .39x.39 | 13.04 |
| 16 | 400 | 19.21 | 4.00 | 15.25 | 17.41 | 14.75 | 5.91 | 4.92 | 4 | .57 | 1.38 | 2.00 | .39x.39 | 14.85 |
| 18 | 450 | 21.12 | 4.25 | 17.25 | 19.47 | 16.00 | 8.27 | 6.50 | 4 | .81 | 1.97 | 2.50 | .39x.47 | 16.85 |
| 20 | 500 | 23.25 | 5.00 | 19.25 | 21.59 | 17.25 | 8.27 | 6.50 | 4 | .81 | 1.97 | 2.50 | .39x.47 | 18.73 |

| Lug Bolting Data | | |
|---|---|---|
| BC | No. Holes | Thrds UNC-2B |
| 18.75 | 12 | 1-8 |
| 21.25 | 16 | 1-8 |
| 22.75 | 16 | 1 1/8-7 |
| 25.00 | 20 | 1 1/8-7 |

# SELECTION DATA

## FLANGE REQUIREMENTS

Bray valves are designed for installation between ANSI Class 125/150 lb. weld-neck or slip-on flanges, BS 10 Tables D&E, BS 4504 NP 10/16, DIN ND 10/16, AS 2129 and JIS 10, either flat faced or raised faced. While weld-neck flanges are recommended, Bray has specifically designed its valve seat to work with slip-on flanges, thus eliminating common failures of other butterfly valve designs. When using raised face flanges be sure to properly align valve and flange. Type C stub-end flanges are not recommended.

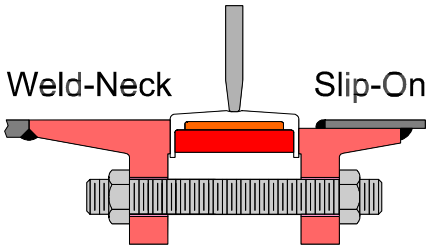


Note: Flanges on both sides of installed valve must be the same type

## PRESSURE RATINGS*

For bi-directional bubble-tight shut off, disc in closed position:

| Inches | mm | psig | bar |
|---|---|---|---|
| 2-12 | 50-300 | 175 | 12 |
| 14-20 | 350-500 | 150 | 10 |

For Dead-end Service Applications:
With *downstream flanges installed* or with *vulcanized seats,* the dead-end pressure ratings are equal to valve bi-directional ratings as stated above. With no downstream flanges or with seats that are not vulcanized, the dead-end pressure rating for 2”-12” valves is 75 psi (5 bar) for 14”-20” valves, 50 psi (3.5 bar.)

* Pressure Ratings are based on standard disc diameters. For low pressure application, Bray offers a standard reduced disc diameter to decrease seating torques and to extend seat life, thus increasing the valve's performance and reducing actuator costs for the customer.

## VELOCITY LIMITS

For On/Off Services
Fluids - 30 ft/sec (9m/s)
Gases - 175 ft/sec (54m/s)

## Cv VALUES-VALVE SIZING COEFFICIENT

| Valve Size | | Disc Position (degrees) | | | | | | | | |
|---|---|---|---|---|---|---|---|---|---|---|
| ins | mm | 90° | 80° | 70° | 60° | 50° | 40° | 30° | 20° | 10° |
| 2 | 50 | 144 | 114 | 84 | 61 | 43 | 27 | 16 | 7 | 1 |
| 21/2 | 65 | 282 | 223 | 163 | 107 | 67 | 43 | 24 | 11 | 1.5 |
| 3 | 80 | 461 | 364 | 267 | 154 | 96 | 61 | 35 | 15 | 2 |
| 4 | 100 | 841 | 701 | 496 | 274 | 171 | 109 | 62 | 27 | 3 |
| 5 | 125 | 1376 | 1146 | 775 | 428 | 268 | 170 | 98 | 43 | 5 |
| 6 | 150 | 1850 | 1542 | 1025 | 567 | 354 | 225 | 129 | 56 | 6 |
| 8 | 200 | 3316 | 2842 | 1862 | 1081 | 680 | 421 | 241 | 102 | 12 |
| 10 | 250 | 5430 | 4525 | 2948 | 1710 | 1076 | 667 | 382 | 162 | 19 |
| 12 | 300 | 8077 | 6731 | 4393 | 2563 | 1594 | 1005 | 555 | 235 | 27 |
| 14 | 350 | 10538 | 8874 | 5939 | 3384 | 2149 | 1320 | 756 | 299 | 34 |
| 16 | 400 | 13966 | 11761 | 7867 | 4483 | 2847 | 1749 | 1001 | 397 | 45 |
| 18 | 450 | 17214 | 14496 | 10065 | 5736 | 3643 | 2237 | 1281 | 507 | 58 |
| 20 | 500 | 22339 | 18812 | 12535 | 7144 | 4536 | 2786 | 1595 | 632 | 72 |

Cv is defined as the volume of water in U.S.G.P.M. that will flow through a given restriction or valve opening with a pressure drop of one (1) p.s.i. at room temperature. Recommended control angles are between 25°-70° open. Preferred

## EXPECTED SEATING/UNSEATING TORQUES (Lb.-Ins.)

| | | Full-Rated Pressure Valve | | | | Reduced Disc |
|---|---|---|---|---|---|---|
| Valve Size | | rP (PSI) | | | | rP (PSI) |
| ins | mm | 50 | 100 | 150 | 175 | 50 |
| 2 | 50 | 125 | 130 | 135 | 140 | 125 |
| 21/2 | 65 | 195 | 205 | 215 | 220 | 195 |
| 3 | 80 | 260 | 275 | 290 | 297 | 260 |
| 4 | 100 | 400 | 425 | 450 | 462 | 267 |
| 5 | 125 | 615 | 670 | 725 | 755 | 410 |
| 6 | 150 | 783 | 871 | 953 | 1003 | 537 |
| 8 | 200 | 1475 | 1650 | 1825 | 1915 | 983 |
| 10 | 250 | 2240 | 2520 | 2800 | 2940 | 1493 |
| 12 | 300 | 3420 | 3870 | 4320 | 4545 | 2280 |
| 14 | 350 | 4950 | 5700 | 6450 | - | 3300 |
| 16 | 400 | 6400 | 7700 | 9000 | - | 4267 |
| 18 | 450 | 7850 | 9850 | 11850 | - | 5267 |
| 20 | 500 | 10300 | 12900 | 15500 | - | 6867 |

Valve Torque Rating - Bray has classified valve torque ratings according to 3 types: non-corrosive lubricating service, general service, and severe service. Torques listed above are for general services.Consult Bray for torque information corresponding to specific application.

TO USE TORQUE CHART, NOTE THE FOLLOWING:
1) For Bray valves, Series 20, 21, 30, 31 and 34.
2) Review Technical Bulletin No. 1001, Expected Seating/Unseating Torque's, for explanation of the 3 service classes and their related seating/unseating torque values for given pressure differentials of Full-Rated and Reduced Disc Diameter valves.
3) Dynamic Torque values are not considered. See Technical Bulletin No. 1002 for evaluation of Dynamic Torque values vs. Seating/Unseating Torque values.
4) Do not apply a safety factor to above torque values when determining actuator output torque requirement.
5) For 3 way assemblies where on valve is opening and other is closing, multiply torque by 1.5 factor.

# SELECTION DATA

## RECOMMENDED SPECIFICATIONS FOR BRAY SERIES 30/31 SHALL BE:

- Epoxy coated, cast iron, wafer or lug bodies.
- With flange locating holes that meet ANSI 125/150 (or BS 10 tables D&E, BS 4504 NP 10/16, DIN ND 10/16, AS 2129 and JIS 10) drillings.
- Through-stem direct drive double "D" design requiring no disc screws or pins to connect stem to disc with no possible leak paths in disc/stem connection.
- Stem mechanically retained in body neck and no part of stem or body exposed to line media.
- Tongue-and-groove seat design with primary hub seal and a molded o-ring suitable for weld-neck and slip-on flanges. Seat totally encapsulates the body with no flange gaskets required.
- Spherically machined, hand polished disc edge and hub for minimum torque and maximum sealing capability.
- Equipped with non-corrosive bushing and self-adjusting stem seal.
- Bi-directional and tested to 110% of full rating.
- Bi-directional pressure ratings:
  2"-12" valves: 175 PSI
  14"-20" valves: 150 PSI
  Lug bodies for dead end service
  With downstream flanges or vulcanized seats, pressure ratings are equal to bi-directional ratings as stated above.
  With no downstream flanges or non-vulcanized seats:
  2"-12" valves: 75 psi.
  14"-20" valves: 50 psi.
- No field adjustment necessary to maintain optimum field performance
- The valve shall be Bray Series 30 wafer / 31 lug or equal.

## TEMP. RANGE OF SEATS

| Type | Maximum | Minimum |
|---|---|---|
| EPDM | +250°F(121°C) | -40°F(-40°C) |
| Buna-N | +212°F(100°C) | 0°F(-18°C) |
| FKM* | +400°F(204°C) | 0°F(-18°C) |

## MATERIALS SELECTION

2"-20" (50mm-500mm)

### BODY:

- Cast Iron ASTM A126 Class B
- Ductile Iron ASTM A536
- Cast Steel ASTM A216 WCB
- Aluminum ASTM B26

### SEAT:

- Buna-N - Food Grade
- EPDM - Food Grade
- FKM*
- White Buna-N - Food Grade

### STEM:

- Coated Carbon Steel
- 416 SS ASTM A582 Type 416
- 304 SS ASTM A276 Type 304
- 316 SS ASTM A276 Type 316
- Monel

### DISC:

- Aluminum Bronze ASTM B148-954
- Coated Ductile Iron ASTM A536 Gr. 65-45-12
- Ductile Iron,Nylon 11 Coated, ASTM A536 Gr. 65-45-12
- Ductile Iron, Halar® Coated, ASTM A536 Gr. 65-45-12
- 316 SS ASTM A351 CF8M
- Hastelloy® C-276 ASTM B575 Alloy N10276

## WEIGHTS

| Valve Size | | Series | Series |
|---|---|---|---|
| ins | mm | 30 | 31 |
| 2 | 50 | 5.5 | 7.0 |
| 2 1/2 | 65 | 7.0 | 8.0 |
| 3 | 80 | 7.5 | 9.0 |
| 4 | 100 | 11.5 | 15.0 |
| 5 | 125 | 14.0 | 20.0 |
| 6 | 150 | 17.0 | 23.0 |
| 8 | 200 | 34.0 | 42.0 |
| 10 | 250 | 49.0 | 66.0 |
| 12 | 300 | 67.0 | 88.0 |
| 14 | 350 | 95.0 | 114.0 |
| 16 | 400 | 135.0 | 166.0 |
| 18 | 450 | 200.0 | 226.0 |
| 20 | 500 | 260.0 | 305.0 |

Weights are in lbs.

## COMPONENTS

| No. | Qty. | Description |
|---|---|---|
| 1 | 1 | Body |
| 2 | 1 | Seat |
| 3 | 1 | Disc |
| 4 | 1 | Stem |
| 5 | 1 | Stem Seal |
| 6 | 1 | Stem Bushing |
| 7 | 2 | Stem Retainer |
| 8 | 1 | Thrust Washer |
| 9 | 1 | Retaining Ring |

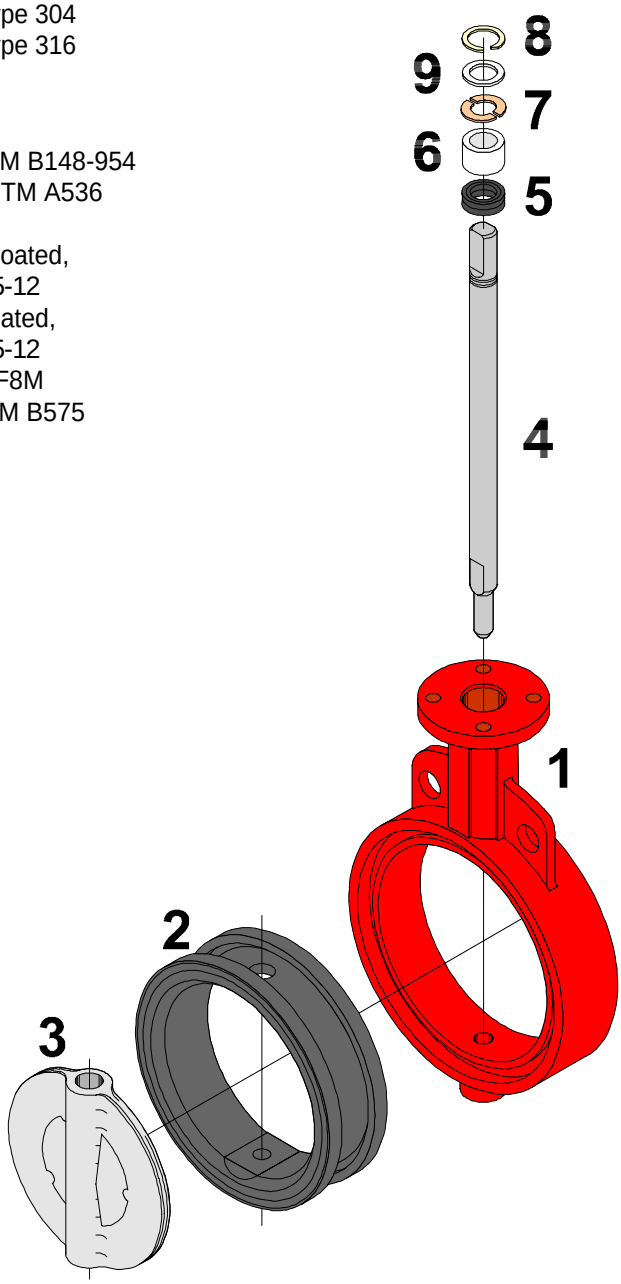


*FKM is the ASTM D1418 designation for Fluorinated Hydrocarbon Elastomers (also called Fluoroelastomers.)
Hastelloy® is a registered trademark of Haynes International, Inc.
Halar® is a registered trademark of Ausimont U.S.A., Inc.

## INSTALLATION

Position the disc in the partially open position, maintaining the disc within body face-to-face. Place the body between flanges and install flange bolts. *Do not use flange gaskets.*

Before tightening flange bolts, carefully open the disc to the full open position to ensure proper alignment and clearance of the disc O.D. with the adjacent pipe I.D. Leave disc in the full open position and tighten flange bolts per required specification. Once bolts are tightened, carefully rotate disc to closed position to ensure disc O.D. clearance.

## MAINTENANCE AND REPAIR

The many Bray features minimize wear and maintenance requirements. No routine lubrication is required. All components-stem, disc, seat, bushing, stem seal, etc., are field replaceable, no adjustment is needed. If components require replacement, remove the valve from the line by placing the disc near the closed position, spread the flanges, support the valve, then remove the flange bolts. No valve maintenance, including removal of manual or power actuators, should be performed until the piping system is completely depressurized.

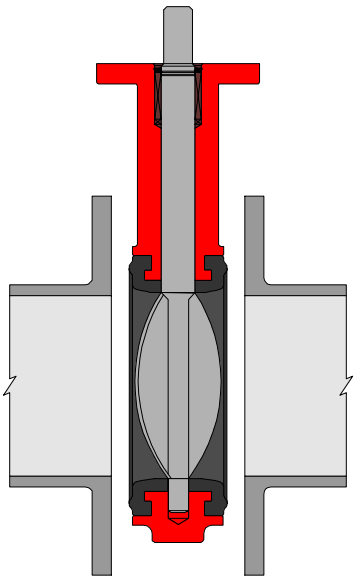

Disc in the Near Closed Position

## DISASSEMBLY

Remove handle, gear operator , or actuator from actuator mounting flange. Remove “Spirolox®” retaining ring. Remove stem with its thrust washer and two C-ring stem retainers. Remove bushing and seal. Remove the disc from the seat, protecting disc edge at all times. Push the seat into an oval shape, then remove the seat from the body.

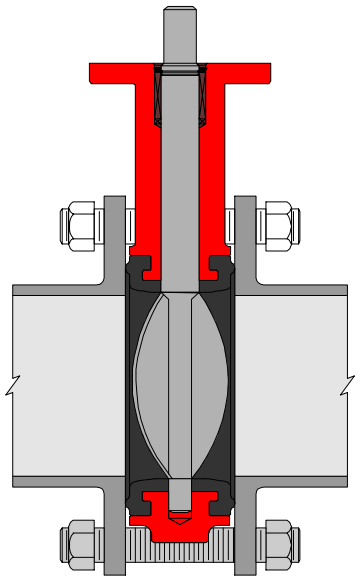

Disc in the Partially Open Position

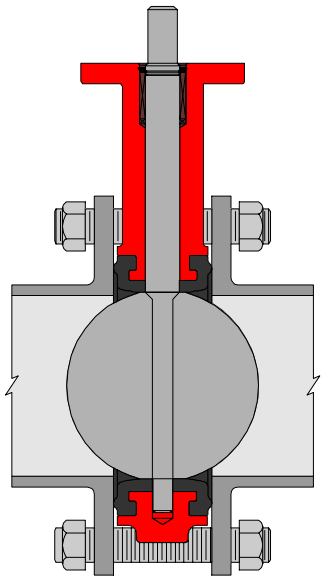

Disc in the Full Open Position

## Assembly

Push the valve seat into an oval and push it into the body with seat stem holes aligned to body stem holes. Push stem into the stem hole of body. For aid in inserting disc, slightly protrude stem beyond the I.D. of the top of the seat. Install a light coating of food grade silicone oil (for silicone free applications use soap and water) on the I.D. of seat. Insert the disc into the seat by lining up the disc hole with the stem hole of the seat. Note: the broached double “D” flats in the disc must be toward the bottom of valve body. (Take special care when lining disc up with stem.) With a downward pressure and rotating the stem back and forth, push the stem until the stem touches the bottom of the body stem hole. Make certain that when pushing the stem through disc bottom, the broached flats of stem and disc are aligned. After the stem has engaged the disc, but before the stem is firmly seated in the body, replace the stem seal and bushing. Install the two C-ring stem retainers in the groove in the stem and thrust washer on top of the C-ring. Seat the stem firmly in the body and install the “Spirolox®” retaining ring back into position.

Bray® CONTROLS

All statements, technical information, and recommendations in this bulletin are for general use only. Consult Bray representatives or factory for the specific requirements and material selection for your intended application. The right to change or modify product design or product without prior notice is reserved. Patents applied for in u.S. and foreign countries.
Bray® is a registered trademark of BRAY INTERNATIONAL., Inc.

A Subsidiary of BRAY INTERNATIONAL, INC.
13333 Westland East Blvd., Houston, Texas 77041
Phone: 281. 894.5454 Fax: 281.894.9499
©1995 Bray International. All rights reserved

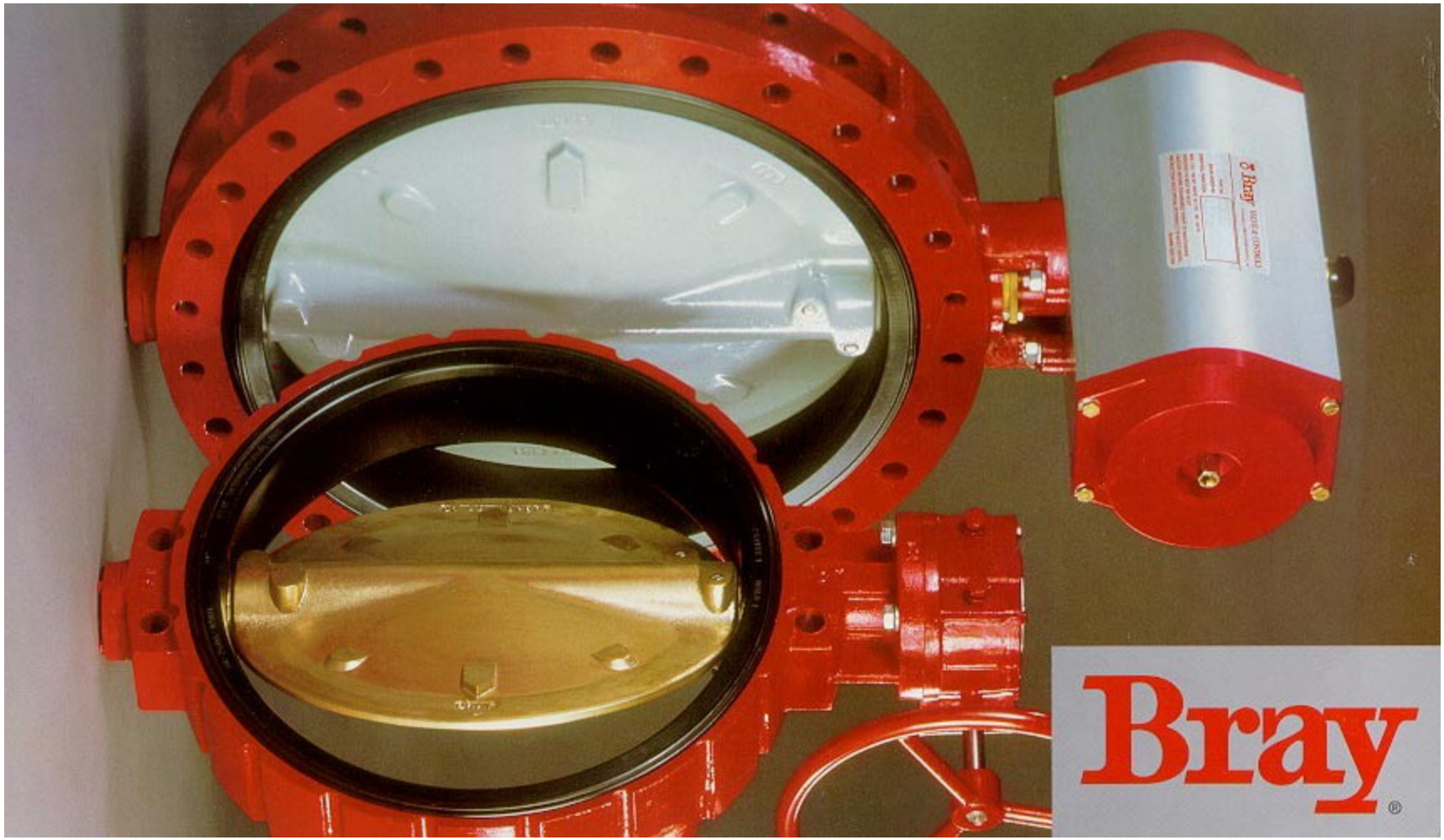


The High Performance Company

# BUTTERFLY VALVES

## *LARGE DIAMETER / RESILIENT SEATED*

**SERIES 32 / 33** Wafer
22”-36” (550mm-900mm)
**SERIES 35 / 36** Full Flanged
22”-72” (550mm-1800mm)

# FEATURES

22”-72” (550mm-1800mm)
Bray Controls proudly offers this line of heavy duty, large diameter, resilient seated butterfly valves. The Series 32/33 valves are wafer versions with the Series 32 valve rated for 75 PSI and the Series 33 designed for a higher rating of 150 PSI. The Series 35/36 are full-flanged versions rated at 75 and 150 PSI respectively. This valve series has many of the design features and benefits of the smaller Bray valves, such as high Cv ratings, minimum parts exposed to the line media, greater reliability and a proven record of long service life. Engineering innovation and exceptional quality are the focus of Bray's unique design features.

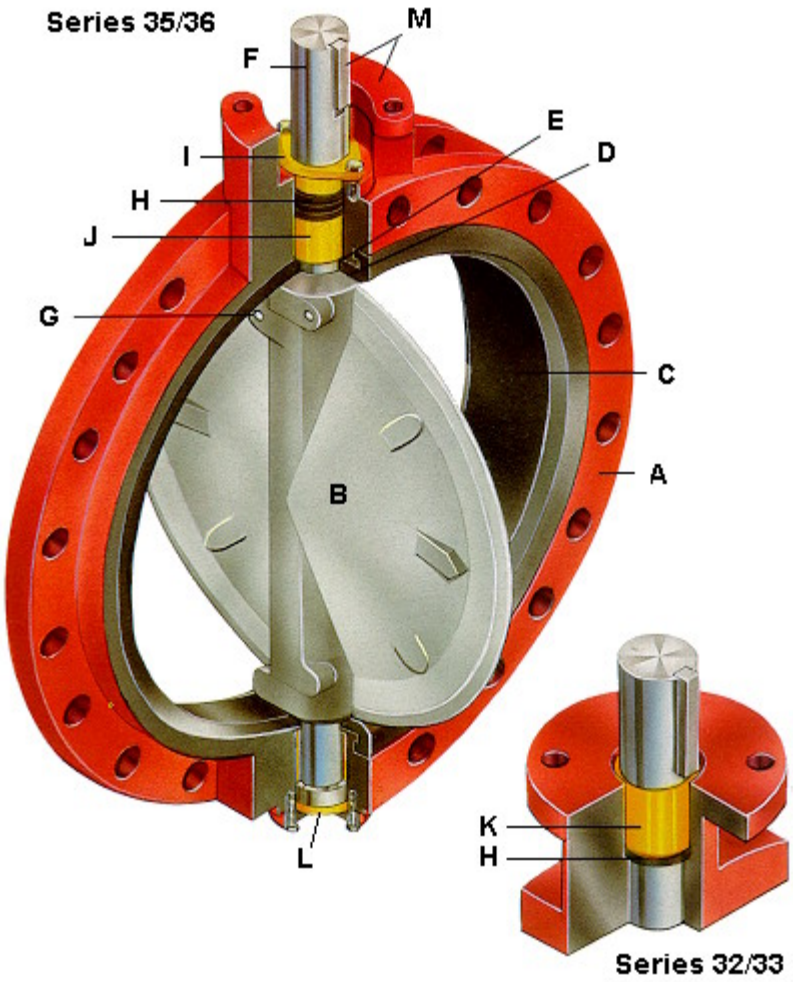


## BODY (A)
One piece wafer or full flanged style. All bodies are drilled to be compatible with ANSI 125/150 or other international flange standards. The Series 35/36 may be bolted to allow downstream flange removal or cross-bolted for maximum resistance to line stresses.

## DISC (B)
The high strength casting is spherically machined, hand polished to provide 360° concentric seating bi-directional bubble-tight shut off, minimum torque and longer seat life. The symmetrical disc profile enhances valve performance - the $C_v$ values are higher, turbulence is reduced and pressure recovery is increased. The disc O.D. clearance is designed to work with all standard piping.

## SEAT (C)
One of the valve's key elements is Bray's unique *tongue and groove* seat design which fully isolates the body from line media. The Bray resilient seat offers lower torque than many valves on the market today, and is excellent for most vacuum services. The *tongue and groove* seat to body retention method is the most advanced design in the industry, making field replacement simple and fast. The strategically located molded-in O-ring completely eliminates the requirement of flange gaskets. The seat isolates the valve body and stem from line media and has been specifically designed to seal with slip-on or weld-neck flanges.

## PRIMARY SEAL (D)
The primary seal is achieved by preloaded contact of spherically machined hand polished disc hubs with unique molded seat flat surfaces. This sealing method isolates the flowing media from the stem and body material at all angles of valve disc seating.

## SECONDARY SEAL (E)
A secondary seal is achieved by an interference fit of the stem and seat hole diameters.

## STEM (F)
Bray's one piece through stem design is completely isolated from the flowing media and achieves high torsional strength. The stem ends are standardized for direct mounting and interchangeability with Bray actuators.

## TAPER PINS (G)
Tangential taper pins of 17-4 PH stainless steel are driven and mechanically locked for maximum torsional capacity and resistance to vibration. O-rings are installed with the driven-in taper pins to insure bubble-tight shutoff under pressure or vacuum conditions.

## STEM PACKING (H)
This advanced V-Type packing design in the Series 35/36 is self-adjusting with bi-directional sealing which prevents external substances from entering the upper stem bore. This packing is externally adjustable and functions well for vacuum applications as well as third pressure seal in emergency situations. The stem packing in the Series 32/33 is a V-cup self-adjusting design.

## ADJUSTABLE PACKING GLAND (I)
A bronze gland allows for field adjustment of stem packing without removing manual operators or power actuators. (Series 35/36 only)

## STEM BEARING (J)
To minimize bearing friction and operating torque, heavy wall bronze sleeve bearings are utilized. (Series 35/36 only)

## STEM BUSHING (K)
Heavy wall bronze bushing absorbs actuator side thrusts. (Series 32/33 only)

## VERTICAL THRUST BEARING (L)
A bronze vertical thrust bearing eliminates disc displacement due to the weight of the stem and disc.

## ACTUATOR MOUNTING FLANGE AND STEM CONNECTION (M)
Due to a modular concept of design, all Bray manual gear operators and pneumatic or electric actuators mount directly to Bray valves.

# SPECIFICATIONS

## RECOMMENDED SPECIFICATIONS FOR BRAY SERIES 32/33, 35/36 SHALL BE:

- Cast iron, wafer or double flanged bodies.
- Tongue-and-groove seat design with primary hub seal and a molded O-ring suitable for weld-neck and slip-on flanges.
- No field adjustments necessary to maintain optimum field performance.
- Seat totally encapsulates the body with no flange gaskets required.
- Spherically machined, hand polished disc edge and hub for minimum torque and maximum sealing capability.
- Equipped with non-corrosive bushing and self-adjusting stem seals for pressure or vaccum on wafer valves.
- On flanged valves, equipped with packing glands and upper/lower bronze bearings. The packing gland to be adjustable without removing manual operator or actuator.
- Bi-directional and tested to 110% of full pressure rating.
- Disc stem connected by 17-4 PH tangential taper pins driven, O-ring sealed, and mechanically locked.

## MATERIALS SELECTION

22”-72” (550mm-1800mm)

### BODY:

- Cast Iron ASTM A126 Class B
- Ductile Iron ASTM A536 Gr. 65-45-12
- Cast Steel ASTM A216 Gr. WCB
- 316 Stainless Steel ASTM A351 CF8M

### DISC:

- Cast Iron ASTM A126 Class B
- Nylon 11 Coated, Cast Iron ASTM A126 Class B
- ENP Cast Iron ASTM A126 Class B
- Ductile Iron ASTM A536 Gr. 65-45-12
- Nylon 11 Coated, Ductile Iron ASTM A536
- Aluminum Bronze ASTM B148 Alloy C95400
- 316 Stainless Steel ASTM A351 CF8M
- Hastelloy® C-276 ASTM B575 Alloy N10276

### SEAT:

- EPDM
- BUNA-N
- FKM*

### STEM:

- Carbon Steel, Coated
- 304 Stainless Steel ASTM A276 Type 304
- Hastelloy® C-276 ASTM B575 Alloy N10276

## $C_v$ VALUES-VALVE SIZING COEFFICIENT BRAY SERIES 32/33, 35/36

| Valve Size | | Disc Position (degrees) | | | | | | | | |
|---|---|---|---|---|---|---|---|---|---|---|
| ins | mm | 90º | 80º | 70º | 60º | 50º | 40º | 30º | 20º | 10º |
| 22 | 550 | 27,168 | 22,028 | 14,562 | 9,036 | 5,640 | 3,510 | 2,070 | 916 | 103 |
| 24 | 600 | 33,154 | 27,186 | 18,235 | 11,040 | 6,962 | 4,244 | 2,387 | 1,028 | 259 |
| 26 | 650 | 36,220 | 29,700 | 19,921 | 12,496 | 7,824 | 4,890 | 2,752 | 1,141 | 289 |
| 28 | 700 | 41,619 | 34,683 | 22,578 | 13,838 | 8,636 | 5,399 | 3,133 | 1,324 | 295 |
| 30 | 750 | 52,443 | 43,003 | 28,844 | 18,090 | 11,328 | 7,080 | 3,986 | 1,652 | 420 |
| 32 | 800 | 60,658 | 48,558 | 32,591 | 20,410 | 12,743 | 7,983 | 4,636 | 2,026 | 550 |
| 36 | 900 | 77,089 | 59,667 | 40,086 | 25,053 | 15,572 | 9,790 | 5,936 | 2,775 | 740 |
| 40 | 1000 | 90,175 | 73,990 | 50,406 | 30,636 | 19,307 | 11,862 | 6,925 | 2,971 | 757 |
| 42 | 1050 | 102,989 | 83,421 | 54,584 | 35,016 | 21,010 | 12,997 | 7,879 | 3,502 | 783 |
| 44 | 1100 | 112,960 | 87,430 | 58,740 | 36,712 | 22,818 | 14,346 | 8,698 | 4,066 | 904 |
| 48 | 1200 | 132,888 | 108,968 | 70,431 | 43,853 | 27,242 | 17,010 | 10,365 | 4,651 | 1,023 |
| 54 | 1400 | 168,700 | 138,334 | 89,411 | 55,671 | 34,583 | 21,594 | 13,158 | 5,904 | 1,299 |
| 60 | 1500 | 190,000 | 154,000 | 102,000 | 63,200 | 39,400 | 24,500 | 14,500 | 6,400 | 1,480 |
| 66 | 1650 | 211,000 | 171,000 | 113,000 | 70,200 | 43,800 | 27,300 | 16,100 | 7,110 | 1,650 |
| 72 | 1800 | 244,000 | 198,000 | 131,000 | 81,200 | 50,700 | 31,500 | 18,600 | 8,220 | 1,900 |

## INSTALLATION

Position the disc in the partially open position, maintaining the disc within the body face-to-face. Place the body between flanges and install flange bolts. Do not use flange gaskets. Before tightening flange bolts, carefully open the disc to the full open position to ensure proper alignment and clearance of the disc O.D. with the adjacent pipe I.D. Leave the disc in the full open position and tighten flange bolts per required specification. Once bolts are tightened, carefully rotate disc to closed position to ensure disc O.D. clearance.

## PRESSURE RATINGS

For bi-directional bubble tight shut off, disc in closed position.

Series 32 : 22”-36” 75 psig
Series 33 : 22”-36” 150 psig
Series 35 : 22”-72” 75 psig
Series 36 : 22”-72” 150 psig

All valves are factory tested to 110% of their specified pressure rating.

## TAPER PINS:

- 17-4 PH Stainless Steel ASTM A564 Type 630 Condition H900

### Packing:

- Buna-N

### Bearings:

- Luberized Bronze (Series 35/36)

### Bushing:

- Luberized Bronze (Series 32/33)

### Thrust Bearing:

- Bronze

## TEMPERATURE RANGE OF SEATS

| Type | Max | Min |
|---|---|---|
| EPDM | +250ºF (121ºC) | -40ºF (-40ºC) |
| Buna-N | +212ºF (100ºC) | 0ºF (-18ºC) |
| FKM* | +400ºF (204ºC) | 0ºF (-18ºC) |

For other seat types consult factory

*FKM is the ASTM D1418 designation for Fluorinated Hydrocarbon Elastomers (also called Fluoroelastomers.)
Hastelloy® is a registered trademark of Haynes International, Inc.

## COMPONENTS

| Item No. | Quantity | | Item Description |
|---|---|---|---|
| | S.32/33 | S.35/36 | |
| 1 | 1 | 1 | Body |
| 2 | 1 | 1 | Seat |
| 3 | 1 | 1 | Disc |
| 4 | 1 | 1 | Stem |
| 5 | 1 | 1 | Bottom Plate |
| 6 | 1 | 1 | Packing |
| 7 | - | 2 | Bearing |
| 8 | 2 | 2 | Taper Pin |
| 9 | 2 | 2 | O-ring |
| 10 | 2 | 2 | Nut |
| 11 | 2 | 2 | Lock Washer |
| 12 | 1 | 1 | Thrust Bearing |
| 13 | 1 | 1 | Gasket |
| 14 | 4 | 6 | Screw |
| 15 | 1 | 1 | Key |
| 16 | - | 1 | Packing Gland |
| 17 | 1 | 1 | Retainer |
| 18 | 1 | - | Bushing |

SERIES 32 / 33

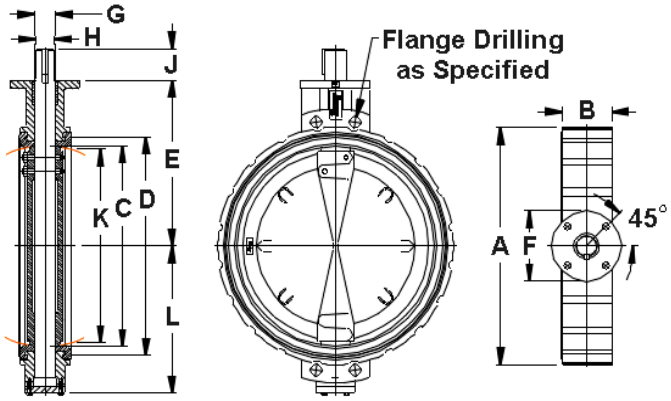


SERIES 35 / 36

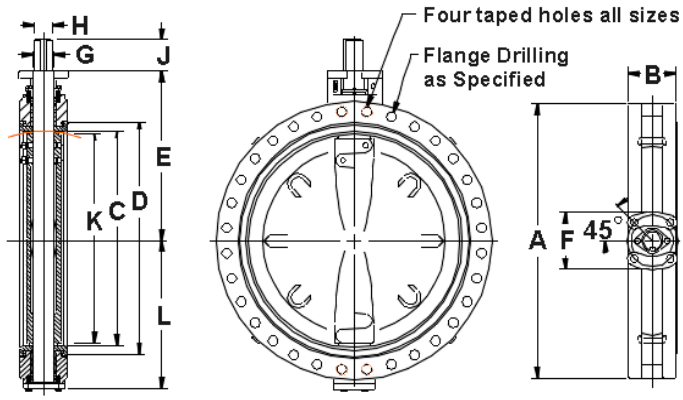


SERIES 32/33 Wafer*

| Valve Size | | | | | | | | Mtg. Flange Drig. | | | | SERIES 32 | | | | SERIES 33 | | | | | |
|---|---|---|---|---|---|---|---|---|---|---|---|---|---|---|---|---|---|---|---|---|---|
| ins | mm | A | B | C | D | E | F | PCD | No. Holes | Hole Dia. | G | H | J | Key Size | K | H | J | Key Size | K | L | Wt (lb.) |
| 22 | 550 | 25.50 | 6.06 | 21.25 | 24.06 | 20.12 | 8.27 | 6.50 | 4 | .81 | 2.50 | 2.50 | 4.00 | .62x.62 | 20.51 | 2.50 | 4.00 | .62x.62 | 20.56 | 16.50 | 400 |
| 24 | 600 | 27.94 | 5.94 | 23.25 | 25.75 | 19.50 | 8.27 | 6.50 | 4 | .81 | 2.50 | 2.50 | 4.00 | .62x.62 | 22.64 | 2.50 | 4.00 | .62x.62 | 22.69 | 17.56 | 420 |
| 26 | 650 | 29.36 | 6.50 | 24.46 | 27.83 | 21.83 | 11.81 | 10.00 | 8 | .75 | 2.50 | 2.50 | 4.00 | .62x.62 | 23.67 | 2.50 | 4.00 | .62x.62 | 23.71 | 18.83 | 540 |
| 28 | 700 | 31.34 | 6.50 | 26.59 | 29.76 | 22.82 | 11.81 | 10.00 | 8 | .75 | 2.50 | 2.50 | 4.00 | .62x.62 | 25.74 | 2.50 | 4.00 | .62x.62 | 25.78 | 19.28 | 580 |
| 30 | 750 | 34.19 | 6.56 | 29.25 | 32.00 | 23.00 | 8.27 | 6.50 | 4 | .81 | 3.00 | 2.50 | 4.00 | .62x.62 | 28.67 | 3.00 | 4.00 | .75x.75 | 28.73 | 20.81 | 660 |
| 32 | 800 | 35.555 | 7.48 | 30.39 | 33.70 | 26.37 | 11.81 | 10.00 | 8 | .75 | 3.00 | 2.50 | 4.00 | .62x.62 | 29.57 | 3.00 | 4.00 | .75x.75 | 29.61 | 21.88 | 785 |
| 36 | 900 | 40.69 | 7.88 | 35.25 | 38.25 | 27.75 | 10.75 | 8.50 | 4 | 1.25 | 3.50 | 3.00 | 4.00 | .75x.75 | 34.54 | 3.50 | 5.25 | .88x.62 | 34.60 | 24.94 | 1025 |

SERIES 35/36 Double Flanged*

| Valve Size | | | | | | | | Mtg. Flange Drig. | | | | SERIES 35 | | | | SERIES 36 | | | | | |
|---|---|---|---|---|---|---|---|---|---|---|---|---|---|---|---|---|---|---|---|---|---|
| ins | mm | A | B | C | D | E | F | PCD | No. Holes | Hole Dia. | G | H | J | Key Size | K | H | J | Key Size | K | L | Wt (lb.) |
| 22 | 550 | 29.50 | 6.06 | 21.25 | 24.06 | 20.12 | 8.27 | 6.50 | 4 | .81 | 2.50 | 2.50 | 4.00 | .62x.62 | 20.51 | 2.50 | 4.00 | .62x.62 | 20.56 | 16.50 | 475 |
| 24 | 600 | 33.25 | 5.94 | 23.25 | 25.75 | 19.50 | 8.27 | 6.50 | 4 | .81 | 2.50 | 2.50 | 4.00 | .62x.62 | 22.64 | 2.50 | 4.00 | .62x.62 | 22.69 | 17.56 | 500 |
| 26 | 650 | 35.75 | 6.50 | 24.46 | 27.83 | 21.83 | 11.81 | 10.00 | 8 | .75 | 2.50 | 2.50 | 4.00 | .62x.62 | 23.67 | 2.50 | 4.00 | .62x.62 | 23.71 | 18.83 | 675 |
| 28 | 700 | 37.80 | 6.50 | 26.59 | 29.76 | 22.82 | 11.81 | 10.00 | 8 | .75 | 2.50 | 2.50 | 4.00 | .62x.62 | 25.74 | 2.50 | 4.00 | .62x.62 | 25.78 | 19.78 | 735 |
| 30 | 750 | 38.75 | 6.56 | 29.25 | 32.00 | 23.00 | 8.27 | 6.50 | 4 | .81 | 3.00 | 2.50 | 4.00 | .62x.62 | 28.67 | 3.00 | 4.00 | .75x.75 | 28.73 | 20.81 | 855 |
| 32 | 800 | 41.75 | 7.48 | 30.39 | 33.70 | 26.37 | 11.81 | 10.00 | 8 | .75 | 3.00 | 2.50 | 4.00 | .62x.62 | 29.57 | 3.00 | 4.00 | .75x.75 | 29.61 | 21.88 | 1010 |
| 36 | 900 | 46.00 | 7.88 | 35.25 | 38.25 | 27.75 | 9.50 | 8.50 | 4 | 1.25 | 3.50 | 3.00 | 4.00 | .75x.75 | 34.54 | 3.50 | 5.25 | .88x.62 | 34.60 | 24.94 | 1320 |
| 40 | 1000 | 50.75 | 8.50 | 38.37 | 41.58 | 30.78 | 13.78 | 11.73 | 8 | .81 | 4.00 | 3.50 | 5.25 | .88x.62 | 37.45 | 4.00 | 5.25 | 1.0x.75 | 37.49 | 26.56 | 2140 |
| 42 | 1050 | 53.00 | 9.88 | 41.25 | 44.25 | 32.00 | 9.50 | 8.50 | 4 | 1.25 | 4.00 | 3.50 | 5.25 | .88x.62 | 40.20 | 4.00 | 5.25 | 1.0x.75 | 40.25 | 27.81 | 2550 |
| 44 | 1100 | 55.25 | 9.88 | 43.25 | 46.25 | 33.12 | 13.78 | 11.73 | 8 | .81 | 4.00 | 3.50 | 5.25 | .88x.62 | 42.20 | 4.00 | 5.25 | 1.0x.75 | 42.25 | 29.06 | 2800 |
| 48 | 1200 | 59.50 | 10.88 | 47.25 | 50.62 | 36.00 | 10.75 | 8.50 | 4 | 1.25 | 5.00 | 4.00 | 5.25 | 1.0x.75 | 46.13 | 5.00 | 6.00 | 1.25x.88 | 46.18 | 31.06 | 3200 |
| 54 | 1400 | 69.00 | 15.36 | 54.12 | 57.50 | 40.62 | 13.78 | 11.73 | 8 | .81 | 6.00 | 5.00 | 5.25 | 1.25x.88 | 51.88 | - | - | - | - | 37.19 | 6000 |
| 54 | 1400 | 69.00 | 15.36 | 54.12 | 57.50 | 40.62 | 16.34 | 14.02 | 8 | 1.30 | 6.00 | - | - | - | - | 6.00 | 6.50 | 1.50x1.0 | 51.88 | 37.19 | 6000 |
| 60^ | 1500 | 73.00 | 15.00 | 59.25 | 63.88 | 42.62 | 16.34 | 14.02 | 8 | 1.30 | 7.00 | 6.00 | 6.50 | 1.5x1.0 | 57.51 | - | - | - | - | 40.88 | 7000 |
| 60^ | 1500 | 73.00 | 15.00 | 59.25 | 63.88 | 42.62 | 18.70 | 15.98 | 8 | 1.56 | 7.00 | - | - | - | - | 7.00 | 6.50 | 1.75x1.5 | 57.56 | 40.88 | 7000 |
| 66 | 1650 | 80.00 | 18.00 | 65.14 | 69.89 | 48.62 | 16.34 | 14.02 | 8 | 1.30 | 7.00 | 6.00 | 6.50 | 1.5x1.0 | 62.91 | - | - | - | - | 44.56 | 8000 |
| 66 | 1650 | 80.00 | 18.00 | 65.14 | 69.89 | 48.62 | 18.70 | 15.98 | 8 | 1.56 | 7.00 | - | - | - | - | 7.00 | 6.50 | 1.75x1.5 | 62.98 | 44.56 | 8000 |
| 72 | 1800 | 86.50 | 18.00 | 69.24 | 73.75 | 52.25 | 18.70 | 15.98 | 8 | 1.56 | 8.50 | 7.50 | 8.00 | 1.75x1.5 | 67.03 | - | - | - | - | 47.44 | 11250 |
| 72 | 1800 | 86.50 | 18.00 | 69.24 | 73.75 | 52.25 | 22.05 | 19.02 | 12 | 1.56 | 8.50 | - | - | - | - | 8.50 | 10.00 | 2.0x1.5 | 67.08 | 47.44 | 11250 |

* Dimensions for the Series 36 valve are the same except for a larger key Size, H, J and K dimension. Dimensions for the 46" and 54"-72" Series 35 and Series 36 valevs differ and are listed separately.
^ Dimesions are for reference only. Consult factory for exact dimensions. Bray reserves the right to change product dimensions without notice.

All statements, technical information, and recommendations in this bulletin are for general use only. Consult Bray representatives or factory for the specific requirements and material selection for your intended application. The right to change or modify product design or product without prior notice is reserved.
Patents applied for in U.S. and foreign countries. Bray® is a registered trademark of BRAY INTERNATIONAL., Inc.

# Nylon 11 Coatings
# Physical / Chemical Resistance Properties

The general physical properties of Nylon 11 coatings properly applied with primer and temperature are as follows:

| | |
|---|---|
| **Melting Point** | 363-367°F<br>(irrespective of type of powder) |
| **Specific Gravity** at 68°F<br>Coating in natural powders<br>Coating in fine powder, white<br>Coating in ES powder, white | <br>0.0376 lb/in$^3$<br>0.0385 lb/in$^3$<br>0.0403 lb/in$^3$ |
| **Solubility**<br>Solvent for tests and analysis<br><br>Solvent for stripping | <br>metacresol; sulphuric acid, formic acid, alcohol-phenol mixtures<br>Inpro CL, Turco 5061 |
| **Water absorption to saturation**<br>At 68°F and 65% RH<br>At 68°F and 100% RH<br>At 212°F and 100% RH (boiling water) | <br>0.9 to 1.1% (1 according)<br>1.6 to 1.9% (1 to the type)<br>2.4 to 3.0% (1 of powder) |
| **Shore D hardness** at 68°F, measured at a thickness greater than 0.2 inches to eliminate the influence of the substrate | 75 |
| **Hardness** measured with a Persoz pendulum at 68°F (AFNORT 30-016) | 190 |
| **Rockwell hardness**, R scale, ASTM D 785 at 68°F measured at a thickness greater than 0.2 inches to eliminate the influence of the substrate | 106 |
| **Surface hardness** according to DIN 53-456 at 68°F 10 sec. under load | 11,600 PSI |
| **Scratch resistance** measured with the Clemen apparatus; load necessary to introduce a scratch which reaches the underlying metal for a coating of 0.016 inch thickness | 13.3 lbf |
| **Shear strength**, ASTM D 732 | 5076-6092 PSI |
| **Impact resistance**<br>Projectile with hemi-spherical head, 0.98 inches diameter, weighing 4.41 lbf., falling from height of 19.7 inches, horizontal coating 0.01 inches thick | <br>Excellent<br>no fracture of the coating and metal not bared after impact |

All information herein is proprietary and confidential and may not be copied or reproduced without the expressed written consent of BRAY INTERNATIONAL, Inc.

| | |
|---|---|
| **Impact resistance (cont.)**<br>ATO test; cylindrical bar, 0.98 inches diameter, weighing 4.72 lbf, falling from 5.12 inches on to a coating 0.01 inches thick applied to a tubular substrate at a rate of 30 impacts per minute | After 4,000 impacts the coating is not fractured; the tubular substrate is deformed and the coating develops a matt finish |
| **Abrasion resistance**<br>Taber abrasimeter (wheel type CS 17, load 2.21 lbf)<br>loss of weight after 1,000 turns<br>coefficient of friction | Excellent<br>1.76 to 2.82 x $10^{-4}$ oz.<br><br>0.10 – 0.30 (according to test conditions) |
| **Tensile strength** ASTM D 638 (Measured on a Stripped coating)<br>Tensile strength at yield<br>Elongation at yield<br>Tensile strength at break | <br>4496-4786 PSI<br>18-24%<br>5656-6817 PSI |
| **Specific heat** | 0.499 btu/lb °F |
| **Thermal conductivity** | 2.01 btu in/ft$^2$h°F<br>Between 323 and 443°K (122 & 338°F) |
| **Latent heat of fusion** | 35.98 btu/lb |
| **Coefficient of linear expansion** ASTM D 696 | 5.055 x $10^{-5}$ / °F (-22 to 104°F)<br>8.33 x $10^{-5}$ / °F (104 to 248°F) |
| **Inflammability** ATM D 635 (measured at a Thickness greater than 0.12 inches to eliminate the influence of the substrate) | self-extinguishing |
| **Transverse of volume resistivity**<br>ASTM D 257 at 68°F and 65% RH at 500V | 8.89 x $10^{14}$ohms / in$^2$ / in |
| **Surface resistivity**<br>ASTM D 257 at 68°F and 65% RH at 500V | 2.4 x $10^{14}$ohms |
| **Dielectric constant**<br>$10^2$Hz<br>$10^6$Hz | <br>3.9<br>3.1 |
| **Tangent of the angle of loss (power factor)** at 68°F and 65% RH at 1,000 V R.M.S. with a current of 1,000 Hz | 0.05 |
| **Resistance to surface tracking**<br>DIN 53-480, KA method | Grade KA3c |

All information herein is proprietary and confidential and may not be copied or reproduced without the expressed written consent of BRAY INTERNATIONAL, Inc.

| | |
|---|---|
| **Dielectric strength** measured at 68°F and 65% RH | |
| Influence of the thickness studied on a natural coating: | |
| 0.008 in. | 1.34 KV / .001 in. |
| 0.017 in. | 0.98 KV / .001 in. |
| 0.028 in. | 0.88 KV / .001 in. |
| 0.035 in. | 0.84 KV / .001 in. |
| Influence of color (pigments and colorants) studied at a thickness of 0.016 in. | |
| Natural | 0.99 KV / .001 in. |
| grey 49 | 0.775 KV / .001 in. |
| red 16 | 0.767 KV / .001 in. |
| black 26 | 0.288 KV / .001 in. |
| | NOTE: From the point of view of electric insulation, the coating is completely satisfactory when its dielectric strength exceeds 0.457 KV / .001 in. |
| **Resistance to boiling water** | Excellent adhesion after 2,000 hours; with a special surface preparation this adhesion will be sustained for much longer; consult us for further details |
| **Resistance to outdoor exposure And Ultra-Violet radiation** | Very good in white, black Y and pastel-colored coatings Bray's red color is not subject to UV deterioration (chalking or cracking) |
| **Resistance to salt spray** | No corrosion after 2,000 hours exposure (ASTM B117 or AFNOR X 41-002) |
| **Resistance to sea water** | No corrosion after 10 years exposure |

CHEMICAL PROPERTIES OF THE COATING

In general, Nylon 11 coatings have good resistance to inorganic salts, alkalis, most solvents and to organic acids. Greater caution must be observed in uses involving inorganic acids, phenols and certain chlorinated solvents. In such cases, it is advisable to consult Bray Inside Sales Department, specifying the practical problem involved; e.g. the temperature and chemical composition of the liquid or gas. Practical tests have shown that Nylon 11 coatings have excellent resistance to chemical solutions provided the material coated is properly prepared.

The following is a summary of Nylon 11 resistance to various chemicals, as a function of temperature.

A – Recommended, generally little or minor effect based on valve usage experience and recommendations from suppliers.

B – May sometimes be used depending on the conditions of application such as concentration and temperature. Testing is recommended before full scale usage.

N – Not recommended for usage.

BLANK – Insufficient evidence available.

All information herein is proprietary and confidential and may not be copied or reproduced without the expressed written consent of BRAY INTERNATIONAL, Inc.

| | Concentration | 68°F | 104°F | 140°F | 194°F |
|---|---|---|---|---|---|
| **Inorganic bases** | | | | | |
| Ammonia | Liquid or gas | A | A | | |
| Ammonium hydroxide | Concentrated | A | A | A | A |
| Potassium hydroxide | 50% | A | B | N | N |
| Sodium hydroxide | 5% | A | A | B | |
| Sodium hydroxide | 10% | A | B | B | |
| Sodium hydroxide | 50% | A | B | N | N |
| **Inorganic acids** | | | | | |
| Chromic acid | 10% | N | N | N | N |
| Hydrochloric acid | 1% | A | B | N | N |
| Hydrochloric acid | 10% | A | B | N | N |
| Nitric acid | all concentrations | N | N | N | N |
| Phosphoric acid | 50% | A | B | N | N |
| Sulfur trioxide | | B | N | N | N |
| Sulfuric acid | 1% | A | B | B | N |
| Sulfuric acid | 10% | A | B | N | N |
| **Inorganic salts** | | | | | |
| Alum | Concentrated solutions | A | A | A | |
| Aluminum sulfate | Or slurries | A | A | A | A |
| Ammonium nitrate | “ | A | A | A | |
| Ammonium sulfate | “ | N | A | B | |
| Barium chloride | “ | A | A | A | A |
| Calcium arsenate | “ | A | A | A | |
| Calcium chloride | ” | A | A | A | A |
| Calcium sulfate | ” | A | A | B | |
| Copper sulfate | “ | A | A | A | A |
| Diammonium phosphate | “ | A | A | B | |
| Magnesium chloride | 50% | A | A | A | A |
| Potassium ferrocyanide | concentrated sclutions | A | A | A | |
| Potassium nitrate | or slurries | A | B | N | N |
| Potassium sulfate | “ | A | A | A | A |
| Sodium silicate | “ | A | A | A | A |
| Sodium sulfide | “ | A | B | B | |
| Sodium carbonate | “ | A | A | B | N |
| Sodium chloride | saturated concentrated | A | A | A | A |
| Trisodium phosphate | solutions or slurries | A | A | A | A |
| **Other inorganic products** | | | | | |
| Agricultural sprays | | A | A | | |
| Bleach solution | | B | N | N | N |
| Bromine | | N | N | | |
| Chlorine | | N | N | N | N |
| Fluorine | | N | N | N | N |
| Hydrogen | | A | A | A | A |
| Hydrogen peroxide | 20 vol. | A | B | | |
| Mercury | | A | A | A | A |
| Oxygen | | A | A | B | N |
| Ozone | | B | N | N | N |
| Potassium permanganate | 5% | N | N | | |
| Sea water | | A | A | A | A |
| Soda water | | A | A | A | A |
| sulfur | | A | A | | |

All information herein is proprietary and confidential and may not be copied or reproduced without the expressed written consent of BRAY INTERNATIONAL, Inc.

| | Concentration | 68°F | 104°F | 140°F | 194°F |
|---|---|---|---|---|---|
| **Other inorganic products (cont'd)** | | | | | |
| Water | | A | A | A | A |
| **Organic bases** | | | | | |
| Aniline | Pure | B | N | N | N |
| Diethanolamine | 20% | A | A | A | B |
| Pyridine | Pure | B | N | N | N |
| Urea | | A | A | B | B |
| **Organic acids and anhydrides** | | | | | |
| Acetic acid | | B | N | N | N |
| Acetic anhydride | | B | N | N | N |
| Citric acid | | A | A | B | N |
| Formic acid | | N | N | N | N |
| Lactic acid | | A | A | A | B |
| Oleic acid | | A | A | A | B |
| Oxalic acid | | A | A | B | N |
| Picric acid | | B | N | N | N |
| Stearic acid | | A | A | A | B |
| Tartaric acid | Saturated solution | A | A | A | B |
| Uric acid | | A | A | A | B |
| **Hydrocarbons** | | | | | |
| Acetylene | | A | A | A | |
| Benzene | | A | A | B | |
| Butane | | A | A | A | |
| Cyclohexane | | A | A | B | |
| Decalin | | A | A | A | B |
| Freon 12 | | A | | | |
| Freon 22 | | A | | | |
| Hexane | | A | A | A | |
| Methane | | A | A | A | |
| Naphthalene | | A | A | A | B |
| Propane | | A | A | A | |
| Styrene | | A | A | | |
| Tolunene | | A | A | B | B |
| xylene | | A | A | B | B |
| **Alcohols** | | | | | |
| Benzyl alcohol | | | | | |
| Butanol | | | | | |
| Ethanol | | | | | |
| Glycerine | | | | | |
| Glycol | | | | | |
| Methanol | | | | | |
| **Aldehydes and Ketones** | | | | | |
| Acetaldehyde | | A | B | B | |
| Acetone | Pure | A | A | B | N |
| Benzaldehyde | | A | B | N | |
| Cyclohexanone | | A | B | N | |
| Formaldehyde | Technical | A | B | N | |
| Methylethylketone | | A | A | B | N |
| Methylisobutylketone | | A | A | B | N |

All information herein is proprietary and confidential and may not be copied or reproduced without the expressed written consent of BRAY INTERNATIONAL, Inc.

| | Concentration | 68°F | 104°F | 140°F | 194°F |
|---|---|---|---|---|---|
| **Chlorinated solvents** | | | | | |
| Carbon tetrachloride | | N | | | |
| Methyl bromide | | A | N | | |
| Methyl chloride | | A | N | | |
| Perchlorethylene | | A | A | B | |
| Trichlorethane | | B | N | | |
| Trichlorethylene | | A | B | | |
| **Phenols** | | N | N | N | N |
| **Salts, Esters, Ethers** | | | | | |
| Amyl acetate | | A | A | A | B |
| Butyl acetate | | A | A | A | B |
| Diethyl ether | | A | | | |
| Dioctylphosphate | | A | A | A | B |
| Diotylphthalate | | A | A | A | |
| Ethyl acetate | | A | A | A | |
| Fatty acid esters | | A | A | A | A |
| Methyl acetate | | A | A | A | |
| Methyl sulfate | | A | B | | |
| Tributylphosphate | | A | A | A | B |
| Tricresylphosphate | | A | A | A | B |
| **Various organic compounds** | | | | | |
| Anethole | | A | | | |
| Carbon disulphide | | A | B | N | |
| Diacetone alcohol | | A | A | B | N |
| Dimethyl formamide | | A | A | B | |
| Ethylene chlorhydrin | | N | N | | |
| Ethylene oxide | | A | A | B | N |
| Furfurol | | A | A | B | N |
| Glucose | | A | A | A | A |
| Tetraethyl lead | | A | | | |
| Tetrahydrofurane | | A | A | B | |
| **Various products** | | | | | |
| Beer | | A | | | |
| Cider | | A | | | |
| Crude petroleum | | A | A | A | |
| Diesel fuel | | A | A | A | |
| Fruit juices | | A | A | | |
| Fuel oil | | A | A | A | A |
| Greases | | A | A | A | A |
| Ground-nut oil | | A | A | | |
| High octane petrol | | A | A | A | |
| Kerosene (paraffin) | | A | A | A | |
| Linseed cake | | A | A | A | A |
| Milk | | A | A | A | A |
| Mustard | | A | | | |
| Normal petrol | | A | A | A | |
| Oils | | A | A | A | A |
| Sea water | | A | A | A | |
| Sewer gas | | A | A | | |
| Soap solution | | A | | | |

All information herein is proprietary and confidential and may not be copied or reproduced without the expressed written consent of BRAY INTERNATIONAL, Inc.

| | Concentration | 68°F | 104°F | 140°F | 194°F |
|---|---|---|---|---|---|
| **Various Products (cont'd)** | | | | | |
| Solutions or emulsions of: | | | | | |
| 2.4 – D | Agricultural sprays | A | | | |
| D.D.T. or Lindane | Agricultural sprays | A | | | |
| Hydroxy-quinoline | Agricultural sprays | A | | | |
| Solvent naphtha | | A | A | A | |
| Stearin | | A | A | A | |
| Turpentine | | A | A | A | |
| Vinegar | | A | | | |
| Wine | | A | | | |

All information herein is proprietary and confidential and may not be copied or reproduced without the expressed written consent of BRAY INTERNATIONAL, Inc.

The High Performance Company

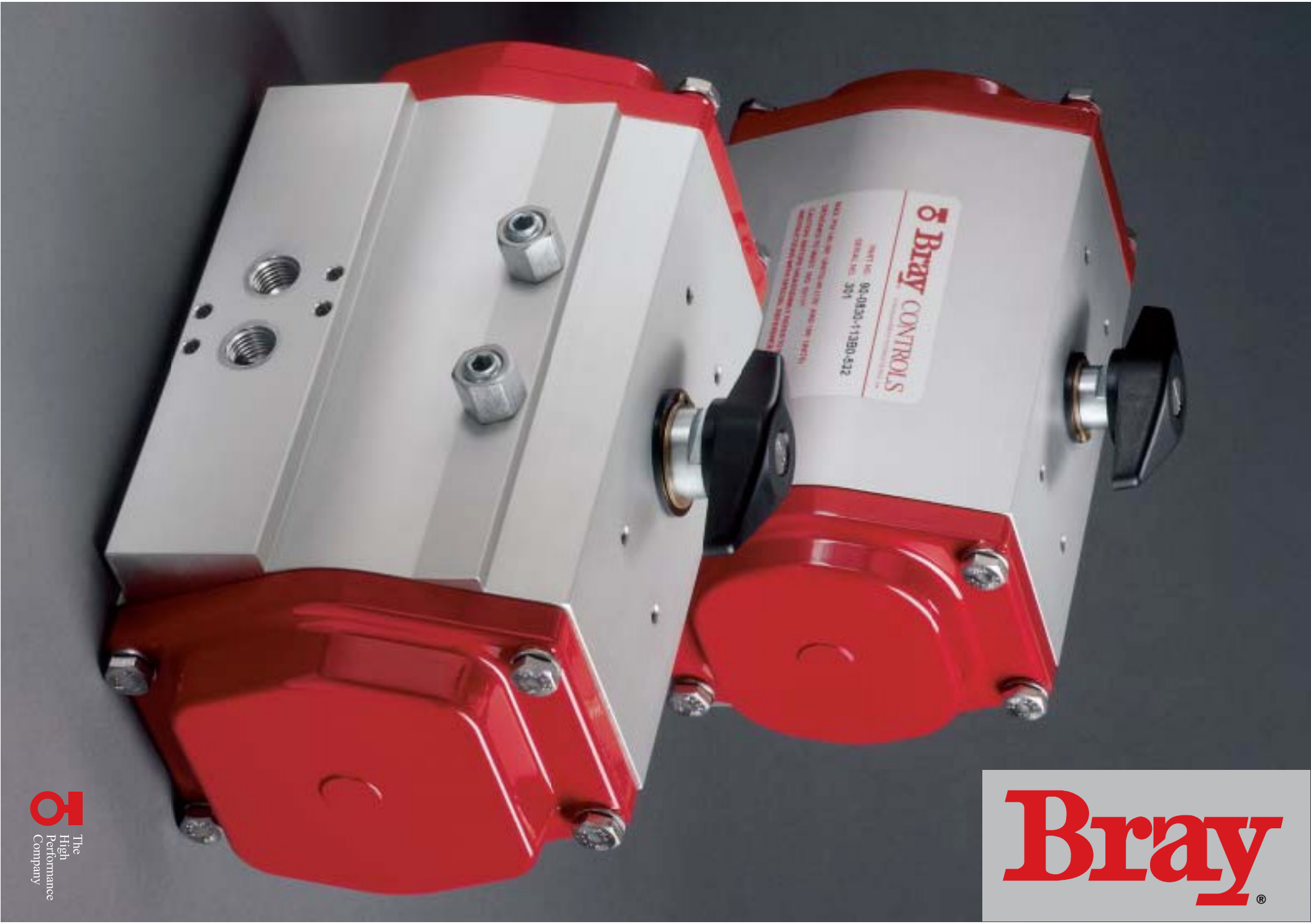


The High Performance Company

Bray®

# PNEUMATIC ACTUATOR

**SERIES 92/93** Rack & Pinion
Double Acting & Spring Return

# SERIES 92/93

Styling, strength, compactness, and simplicity of design have been combined to produce the best rotary actuator on the market today. Bray Controls introduces this newest line of high performance, highest quality pneumatic actuators, the Series 92/93.

Engineering excellence and precision manufacturing has produced a modular product line with reduced overall size requirements and economic savings. In addition all Brayline Accessories are fully modular and directly mount to the actuator – providing flexibility and efficiency at reduced cost.

Bray Series 92/93 actuators are rack and pinion, opposed-piston actuators available in two versions: double acting for rotation of 90°, 135° and 180°, and spring return for 90° rotation. Their ideal use is actuating butterfly, ball or plug valves, but they can be applied anywhere a rotation of 90°, 135° or 180° is needed. Rotated on low friction acetal bearings, Bray units are well suited to handle offset loads to the gear and output shaft assembly.

The Series 92/93 actuators were designed primarily for pneumatic operation up to a maximum pressure of 140 psig (10 Bar) and for temperature ranges of -40°F (-40°C) to +200°F (+95°C). For higher and lower temperature applications, consult factory.

All double acting and spring return units are suitable for both on-off and throttling applications. Actuators which can be actuated with other media such as hydraulic oil or water are also available as an option.

The Series 92/93 is completely enclosed and self contained. The many features minimize maintenance and provide safe, simple disassembly and assembly.

The INTEGRAL PORTING (**A**) reduces the cost of external tubing that is also easily damaged. The unique, lubricated ACETAL PISTON GUIDES (**B**) and RINGS (**C**). Both have a very low coefficient of friction and absorb the side thrusts of the pistons. The piston cylinder walls in the body are honed to a very fine finish thus reducing the overall coefficient of friction. These features extend the life of the actuator and make the Series 92/93 one of the most efficient actuators on the market.

The OUTPUT SHAFT BEARINGS (**D**) on the top and bottom of the pinion are made of low-friction acetal.

The OUTPUT SHAFT and PINION GEAR (**E**) are one-piece, manufactured from hardened alloy steel and zinc-plated for corrosion protection.

The SHAFT POSITION INDICATOR (**F**) clearly shows open or closed position and is easily removable for MANUAL OVERRIDE FUNCTION of the actuator.

The BODY (**G**) is extruded aluminum with anodized corrosion protective coating. The END CAPS (**H**) are polyester coated for chemical resistance. This coating is resistant to dilute aqueous acids, salts, aliphatic hydrocarbons, detergents, petroleum solvents, alcohols, greases and oils.

The TRAVEL STOP (**I**) adjusting screws limit the travel of the actuator to specific degrees of rotation in both open and closed directions. The PISTONS (**J**) are die-cast aluminum.

The two PNEUMATIC SUPPLY PORTS (**K**) are 1/8" NPT on size 48 actuators. The other sizes have 1/4" NPT ports. NAMUR interface is standard on all actuator sizes.

All Bray Series 92/93 actuators have permanently lubricated factory packed bearings and guides. No further lubrication is necessary under normal operating conditions. All seals, including PISTON SEALS (**L**), are permanently lubricated Buna-N O-rings.

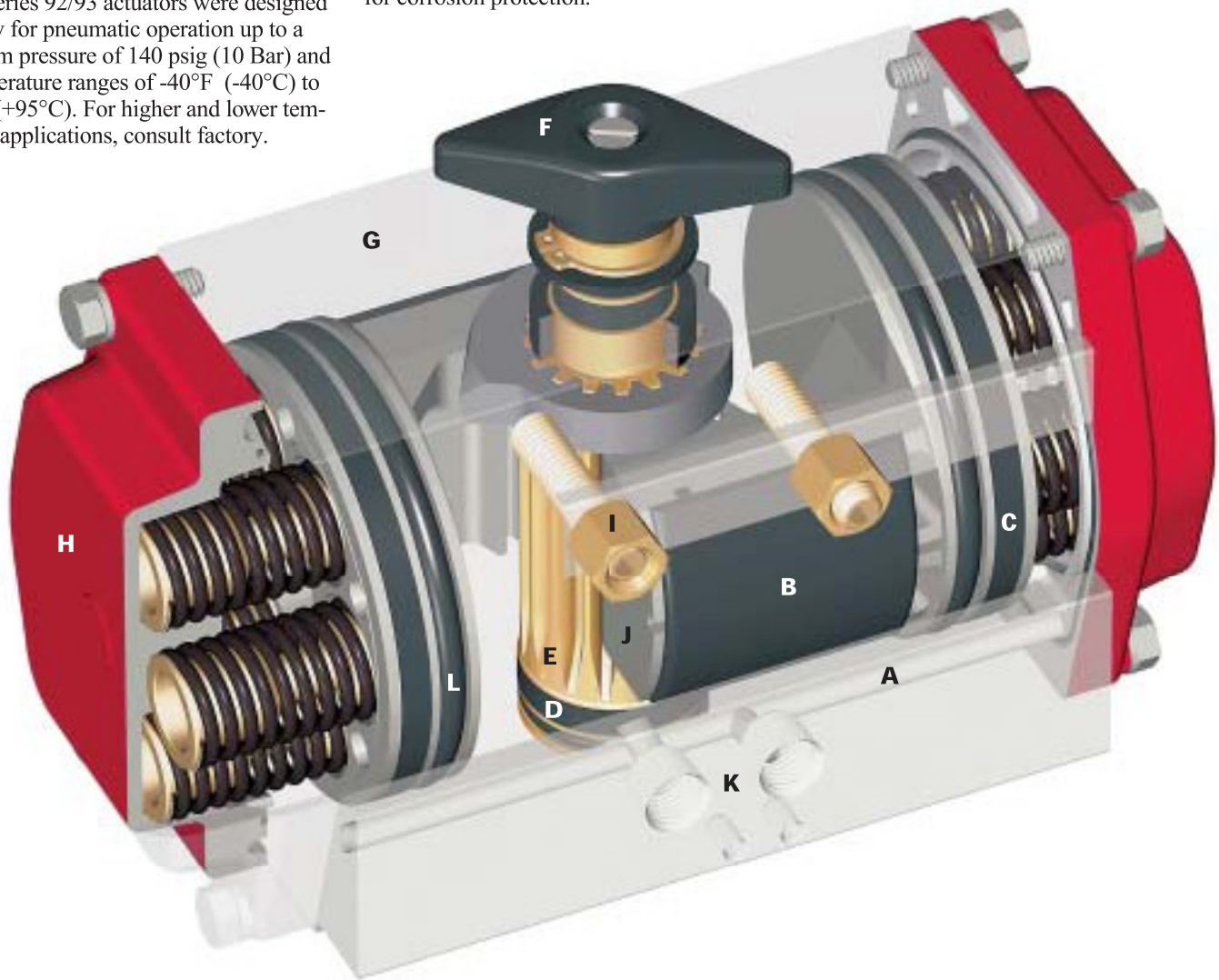

**TRAVEL STOP** Two independent adjusting screws are located on the center of the output shaft to precisely limit the travel of the actuator to specific degrees of rotation. The travel stops permit bidirectional adjustment of actuator movement in both the open and closed positions.

**SPRING RETURN** Bray's Series 93 spring return models employ a unique cartridge system. The actuator was designed to save both space and cost. The housing length of the spring return unit is the same as the double acting unit. Converting from double acting to spring return actuation is just a matter of removing the end caps and adding the unique spring cartridges. The actuator can be disassembled and assembled without cumbersome equipment or danger to the installer due to springs releasing. 40, 60, 80, and 100 psi services are standard, optional ratings are available.

**DIRECT MOUNTING** Bray actuators comply with ISO 5211 dimensions and mount directly to Bray valves without using external linkages. Field installation is simple, misalignment is minimized and contamination buildup between valve and actuator is reduced. Bray can provide linkage for mounting actuators to other devices requiring 90° to 180° rotation.

BrayLINE ACCESSORIES

## SERIES 63 3-WAY AND 4-WAY SOLENOID VALVE

For electrical operation of pneumatic actuator on-off functions, Bray Series 63 solenoids are direct-mounted to the actuator by NAMUR interface. The pilot operated spool control valve is convertible from 3-Way (3/2) to 4-Way (5/2). Both watertight (NEMA 4, 4X) and explosion proof (NEMA 4,4X,7,9) housings are standard. NPT and IP65 DIN connections are offered with both single and dual coils. The air supply connection is 1/4" NPT and the electrical connection is 1/2" NPT. A manual override screw is located on the top of the valve body. Stainless Steel housings, digital Bus solenoids and a Series 55 speed control that allows independent control in both directions of travel are also available.

**VALVE STATUS MONITOR SERIES 50** The Series 50 signals actuator and valve position to local and remote stations. The compact valve status monitor mounts directly to the top of the actuator. Features include finger-touch control cams, captive cover bolts, local position indicator and two conduit entries for easy wiring. Rated for 15 amps at 125 or 250 volts AC, the Series 50 is provided with internal travel switches that are prewired to a terminal block. Standard switches are two single pole double throw (SPDT) micro switches. Available switch options are 4 micro switches, 2 proximity switches, 2 pneumatic switches or potentiometer for continuous read out. The housing is available in waterproof (NEMA 4,4X) or explosion proof (NEMA 4,4X,7,9).

## SERIES 52 VALVE STATUS MONITOR

The Bray 2N1 ProxSensor provides 2 inductive proximity sensors in 1 self-contained, fully sealed, compact enclosure. The 2 sensors are completely encapsulated with epoxy resin in a nylon enclosure for superior moisture, chemical and corrosion protection. Features include LED indicators, high visibility pointer for local position indication, non-magnetic target and multi-pin electrical cable connector. The Series 52 mounts directly to Bray actuators or can be mounted to signal valve position of manually operated valves. AC, DC and NAMUR intrinsically safe versions are available. AC Sensor units operate on 20-250 VAC with a maximum load current of 500mA. DC Sensor units operate on 10-65VDC with a maximum load current of 200mA.

## SERIES 67 ELECTRO-PNEUMATIC & PNEUMATIC POSITIONERS

The Bray Series 67 positioners feature a modular design that allows the units and accessories to be freely combined. For use with either double or single acting actuators, they provide direct or reverse operating modes and zero and range adjustments can be set separately. The electro-pneumatic analog positioner accepts either a 0-20 mADC or 4-20 mADC input signal. Advanced microprocessor controlled Digital Analog and *Bus*Smart Intelligent electro-pneumatic positioners are offered for digital control.

**Brayline Accessories and Bray Actuators both comply with VDI/VDE 3845 (NAMUR recommendations).**

ENGINEERING

## Double Acting/ Spring Return

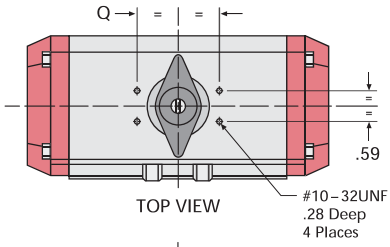


TOP VIEW

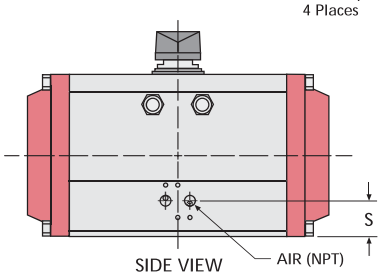


SIDE VIEW

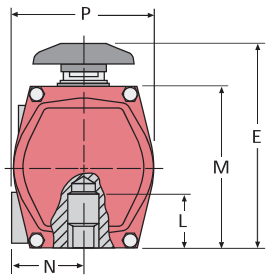


END VIEW

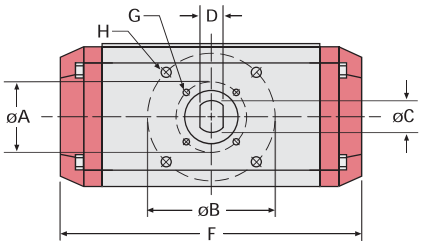


BOTTOM VIEW
ISO 5211 ACTUATOR
MOUNTING PATTERN

NAMUR OUTPUT
SHAFT TOP

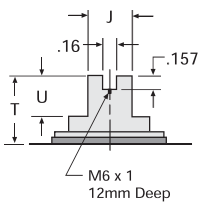


NAMUR SOLENOID
MOUNTING

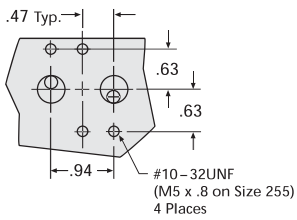


## SERIES 92/93 DIMENSIONS

| SIZE | 48 | 63 | 83 | 92 | 118 | 127 | 160* | 210 | 255‡ |
|---|---|---|---|---|---|---|---|---|---|
| AIR NPT | 1/8 | 1/4 | 1/4 | 1/4 | 1/4 | 1/4 | 1/4 | 1/4 | 1/4 |
| A ISO "F"† | 1.42 F 03 | 1.97 F 05 | 1.97 F 05 | 1.97 F 05 | 2.76 F 07 | 2.76 F 07 | — | 4.92 F 12 | 6.50 F 16 |
| B ISO "F"† | 1.97 F 05 | 2.76 F 07 | 2.76 F 07 | 2.76 F 07 | 4.92 F 12 | 4.92 F 12 | 4.92 F 12 | 6.50 F 16 | 7.87x4.72 Rect. |
| C | .55 | .55 | .75 | .75 | 1.18 | 1.18 | 1.18 | 1.97 | 2.50 |
| D | .40 | .40 | .51 | .51 | .87 | .87 | .87 | .47 | .62 |
| E | 3.88 | 4.53 | 5.43 | 5.78 | 7.28 | 8.09 | 9.36 | 11.45 | 13.35 |
| F | 4.00 | 5.58 | 7.40 | 8.59 | 11.90 | 12.31 | 15.54 | 17.80 | 26.70 |
| G (UNC) | 10-32 x .23 | 1/4-20 x .32 | 1/4-20 x .32 | 1/4-20 x .32 | 5/16-18 x .46 | 5/16-18 x .46 | — | 1/2-13 x .78 | M16x2 x 28mm |
| H (UNC) | 1/4-20 x .25 | 5/16-18 x .40 | 5/16-18 x .40 | 5/16-18 x .40 | 1/2-13 x .69 | 1/2-13 x .69 | 1/2-13 x .75 | 5/8-11 x 1.11 | M16x2 x 28mm |
| J | .38 | .38 | .50 | .50 | 1.12 | 1.12 | 1.12 | 1.12 | 1.12 |
| L | 1.30 | 1.38 | 1.46 | 1.46 | 2.20 | 2.20 | 2.20 | 2.76 | 4.25 |
| M | 2.50 | 3.46 | 4.27 | 4.61 | 5.52 | 6.32 | 7.80 | 10.04 | 11.89 |
| N | 1.60 | 1.72 | 2.02 | 2.18 | 2.53 | 2.72 | 3.07 | 4.25 | 4.75 |
| P | 2.19 | 3.11 | 3.83 | 4.17 | 4.91 | 5.44 | 6.82 | 8.83 | 10.75 |
| Q | 1.58 | 1.58 | 1.58 | 1.58 | 1.58 | 1.58 | 2.56 | 2.56 | 2.56 |
| S | 1.25 | .89 | .89 | .94 | 1.36 | 1.36 | 1.39 | 1.44 | 1.50 |
| T | 1.10** | .79 | .79 | .79 | .79 | .79 | 1.18 | 1.18 | 1.18 |
| U | .47 | .47 | .47 | .47 | .47 | .47 | .75 | .75 | .75 |

**Note:** Double Acting and Spring Return actuators have the same overall dimensions.
† ISO "F" means mounting flange-drilling pattern.
* Dimensions for Size 160A in table. Size 160B (keyed stem version) has C dimension of 1.38 and D dimension of .39.
‡ Dimensions for Size 255A in table. Size 255B actuator has a C dimension of 3.00 and D dimension of .75.
** Size 48 has a T dimension of .79 with use of NAMUR top plate.

## Actuator Speeds

| SIZE | 48 | 63 | 83 | 92 | 118 | 127 | 160 | 210 | 255 |
|---|---|---|---|---|---|---|---|---|---|
| Open Stroke/ Close Stroke | 1/4 | 1/4 | 1/4 | 1/4 | 1/2 | 1/2 | 1 | 2 | 2 3/4 |

Times are in seconds, at 80 PSIG with 6ft. tubing, internal diameter approximately 1/4".

## Actuator Weights

| SIZE | 48 | 63 | 83 | 92 | 118 | 127 | 160 | 210 | 255 |
|---|---|---|---|---|---|---|---|---|---|
| Double Acting | 1.8 | 3.4 | 6.1 | 8.4 | 16.4 | 20.9 | 38.1 | 65.0 | 144.0 |
| Spring Return | 2.4 | 4.1 | 7.9 | 10.8 | 21.7 | 27.3 | 52.6 | 95.3 | 192.6 |

Weights are in lbs. Spring Return unit weights are with full set of springs per piston.

## Actuator Volumes (ins$^3$)

| SIZE | 48 | 63 | 83 | 92 | 118 | 127 | 160 | 210 | 255 |
|---|---|---|---|---|---|---|---|---|---|
| Counter-clockwise | 5.7 | 9.6 | 24.8 | 34.8 | 73.8 | 96.7 | 187.5 | 360.0 | 750.0 |
| Clockwise | 4.8 | 13.4 | 32.6 | 45.9 | 95.5 | 130.8 | 259.6 | 450.0 | 900.0 |

Counter-clockwise: Air volume in cubic inches required to push pistons apart, full travel.
Clockwise: Air volume in cubic inches required to push pistons together, full travel.

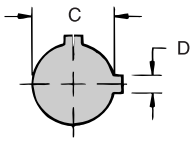


STEM BORE DETAIL
SIZES 210 & 255

# TORQUE

## DOUBLE ACTING TORQUE CURVE

Series 92 – (Air to Air)

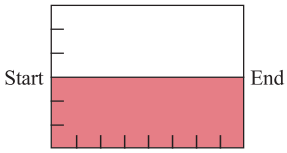


The Series 92 Actuator has a constant output torque throughout travel from start to end, clockwise or counterclockwise rotation.

## SERIES 92 ACTUATOR TORQUE DATA

Double Acting Pneumatic Operated
Torque Output (Lb.-Ins.)

| Actuator Size | Air Supply Pressure (PSIG) | | | | |
|---|---|---|---|---|---|
| | 40 | 60 | 80 | 100 | 120 |
| 48 | 75 | 113 | 150 | 188 | 225 |
| 63 | 145 | 221 | 297 | 373 | 449 |
| 83 | 351 | 536 | 721 | 906 | 1091 |
| 92 | 493 | 753 | 1013 | 1272 | 1532 |
| 118 | 1058 | 1615 | 2171 | 2728 | 3285 |
| 127 | 1410 | 2152 | 2894 | 3636 | 4378 |
| 160 | 2797 | 4270 | 5742 | 7214 | 8687 |
| 210 | 5783 | 8826 | 11870 | 14914 | 17957 |
| 255 | 14211 | 21691 | 29171 | 36650 | 44130 |

## SINGLE ACTING TORQUE CURVES

Series 93 – (Spring Return)

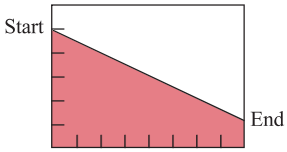


Counterclockwise (Air Stroke)

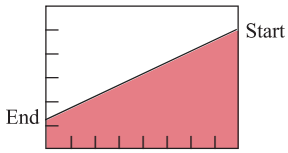


Clockwise (Spring Stroke)

## SERIES 93 ACTUATOR TORQUE DATA

Air Operated, With Spring Return, Torque Output (Lb.-Ins.)

| Actuator Size | No. Springs per Piston | Air Supply Pressure (PSIG) | | | | | | | | | | | |
|---|---|---|---|---|---|---|---|---|---|---|---|---|---|
| | | 40 | | 60 | | 80 | | 100 | | 120 | | Spring Stroke | |
| | | Start | End | Start | End | Start | End | Start | End | Start | End | Start | End |
| 48 | 1 | 51 | 32 | 89 | 70 | 126 | 107 | 164 | 145 | 201 | 182 | 43 | 24 |
| | 2/1 | 39 | 10 | 77 | 48 | 114 | 85 | 152 | 123 | 189 | 160 | 65 | 36 |
| | 2 | | | 64 | 27 | 101 | 64 | 139 | 102 | 176 | 139 | 86 | 49 |
| | 3/2 | | | 52 | 5 | 89 | 42 | 127 | 80 | 164 | 117 | 108 | 61 |
| | 3 | | | | | 77 | 21 | 115 | 59 | 152 | 96 | 129 | 73 |
| 63 | 2 | 91 | 65 | 167 | 141 | 243 | 217 | 319 | 293 | 395 | 369 | 80 | 54 |
| | 3 | 64 | 27 | 140 | 103 | 216 | 179 | 292 | 255 | 368 | 331 | 118 | 81 |
| | 4 | | | 113 | 65 | 189 | 141 | 265 | 217 | 341 | 293 | 156 | 108 |
| | 5 | | | 86 | 27 | 162 | 103 | 238 | 179 | 314 | 255 | 194 | 135 |
| | 6 | | | | | 135 | 65 | 211 | 141 | 287 | 217 | 232 | 162 |
| 83 | 2 | 210 | 167 | 395 | 352 | 580 | 537 | 765 | 722 | 950 | 907 | 184 | 141 |
| | 3 | 156 | 76 | 341 | 261 | 526 | 446 | 711 | 631 | 896 | 816 | 275 | 195 |
| | 4 | | | 281 | 176 | 466 | 361 | 651 | 546 | 836 | 731 | 360 | 255 |
| | 5 | | | 220 | 97 | 405 | 282 | 590 | 467 | 775 | 652 | 439 | 316 |
| | 6 | | | | | 369 | 185 | 554 | 370 | 739 | 555 | 536 | 352 |
| 92 | 2 | 310 | 232 | 570 | 492 | 830 | 752 | 1089 | 1011 | 1349 | 1271 | 261 | 183 |
| | 3 | 218 | 101 | 478 | 361 | 738 | 621 | 997 | 880 | 1257 | 1140 | 392 | 275 |
| | 4 | | | 386 | 231 | 646 | 491 | 905 | 750 | 1165 | 1010 | 522 | 367 |
| | 5 | | | 294 | 94 | 554 | 354 | 813 | 613 | 1073 | 873 | 659 | 459 |
| | 6 | | | | | 462 | 229 | 721 | 488 | 981 | 748 | 784 | 551 |
| 118 | 2 | 692 | 469 | 1249 | 1026 | 1805 | 1582 | 2362 | 2139 | 2919 | 2696 | 589 | 366 |
| | 3 | 509 | 174 | 1066 | 731 | 1622 | 1287 | 2179 | 1844 | 2736 | 2401 | 884 | 549 |
| | 4 | | | 883 | 437 | 1439 | 993 | 1996 | 1550 | 2553 | 2107 | 1178 | 732 |
| | 5 | | | 700 | 142 | 1256 | 698 | 1813 | 1255 | 2370 | 1812 | 1473 | 915 |
| | 6 | | | | | 1073 | 404 | 1630 | 961 | 2187 | 1518 | 1767 | 1098 |
| 127 | 2 | 880 | 465 | 1622 | 1207 | 2364 | 1949 | 3106 | 2691 | 3848 | 3433 | 945 | 530 |
| | 3 | | | 1357 | 733 | 2099 | 1475 | 2841 | 2217 | 3583 | 2959 | 1419 | 795 |
| | 4 | | | 1094 | 261 | 1836 | 1003 | 2578 | 1745 | 3320 | 2487 | 1891 | 1058 |
| | 5 | | | | | 1568 | 529 | 2310 | 1271 | 3052 | 2013 | 2365 | 1326 |
| | 6 | | | | | 1302 | 57 | 2044 | 799 | 2786 | 1541 | 2837 | 1592 |
| 160 | 2 | 1819 | 1118 | 3292 | 2591 | 4764 | 4063 | 6236 | 5535 | 7709 | 7008 | 1679 | 978 |
| | 3 | 1399 | 349 | 2872 | 1822 | 4344 | 3294 | 5816 | 4766 | 7289 | 6239 | 2448 | 1398 |
| | 4 | | | 2452 | 1123 | 3924 | 2595 | 5396 | 4067 | 6869 | 5540 | 3147 | 1818 |
| | 5 | | | 2030 | 353 | 3502 | 1825 | 4974 | 3297 | 6447 | 4770 | 3917 | 2240 |
| | 6 | | | | | 3154 | 1196 | 4626 | 2668 | 6099 | 4141 | 4546 | 2588 |
| 210 | 2 | 3833 | 2508 | 6876 | 5551 | 9920 | 8595 | 12964 | 11639 | 16007 | 14682 | 3275 | 1950 |
| | 3 | 2859 | 868 | 5902 | 3911 | 8946 | 6955 | 11990 | 9999 | 15033 | 13042 | 4915 | 2924 |
| | 4 | | | 4930 | 2275 | 7974 | 5319 | 11018 | 8363 | 14061 | 11406 | 6551 | 3896 |
| | 5 | | | 3949 | 638 | 6993 | 3682 | 10037 | 6726 | 13080 | 9769 | 8188 | 4877 |
| | 6 | | | | | 6022 | 2031 | 9066 | 5075 | 12109 | 8118 | 9839 | 5848 |
| 255 | 2 | 9487 | 6747 | 16967 | 14227 | 24447 | 21707 | 31926 | 29186 | 39406 | 36666 | 7464 | 4724 |
| | 3 | 7125 | 3015 | 14605 | 10495 | 22085 | 17975 | 29564 | 25454 | 37044 | 32934 | 11196 | 7086 |
| | 4 | | | 12243 | 6762 | 19723 | 14242 | 27202 | 21721 | 34682 | 29201 | 14929 | 9448 |
| | 5 | | | 9880 | 3030 | 17360 | 10510 | 24839 | 17989 | 32319 | 25469 | 18661 | 11811 |
| | 6 | | | | | 14998 | 6778 | 22477 | 14257 | 29957 | 21737 | 22393 | 14173 |

# SPECIFICATIONS

## SPACE SAVING MODULAR PRODUCT LINE

The actuator shall be pneumatically operated and must travel a minimum of 90° in each direction and must be able to overtravel at 3% in each direction past 90°. The actuator shall be totally enclosed and contained in a single enclosure, with no external moving parts. All pneumatic passage ways must be integral to the actuator housing so as to eliminate the need for external tubing. Actuator shall be rack and pinion design, and the output torque shall be linear throughout travel. Actuator shall be provided with pistons that have acetal piston guides and rings thus greatly extending the life of the actuator and reducing friction to the minimum. Actuator must be supplied with two independent travel stop adjustments, the 0° and 90° travel positions have travel adjustments of +5° to –5° (see Diagram A below). The actuator shall be provided with mechanical visual position indicator, and the indicator must be able to be removed easily thus exposing the output shaft for use of manually overriding the actuator when needed. The output shaft and pinion must be of one piece and must be manufactured out of hardened alloy steel and zinc plated for corrosion protection. Actuator shall be able to mount in any position without loss of performance. The actuator shall bolt directly to Bray valve mounting flange without need for any brackets.

Actuator housing shall be anodized aluminum and all external fasteners shall be carbon steel, zinc plated. Springs shall be spring steel, coated for corrosion protection. All seals shall be Buna-N and bearings made of lubricated acetal resin.

The actuator shall be factory lubricated. Actuator design must have smooth housing lines so it will self-drain. The actuator shall be factory tested to ensure proper operation.

## STANDARD MATERIALS

| | |
|---|---|
| Body: | Extruded aluminum alloy, anodized |
| End Caps: | Die cast aluminum alloy with corrosion resistant polyester coating |
| Pistons: | Die cast aluminum alloy |
| Output Shaft/Pinion: | Carbon Steel, zinc plated |
| Travel Stop: | Alloy Steel |
| Shaft Bearings: | Acetal |
| Piston Guides: | Acetal |
| Fasteners: | Stainless Steel |
| Springs: | Spring Steel, protective coating |
| O-Ring Seals: | Buna-N |
| Options: | Polyester coated body exterior<br>Electroless Nickel plated body exterior<br>Hard Anodized body exterior<br>Stainless Steel pinion |

## SPRING RETURN – MODULAR DESIGN

The Spring Return System for fail-safe services must be installed in the same housing as the double acting actuator, with no additional housing extensions required, therefore saving weight and space. The spring system must be supplied as a self-contained spring cartridge system. This is a safety feature that ensures disassembly of the actuator without danger of spring release when end caps are removed. Actuator shall be Bray Series 92 or 93 or approved equal.

## SERVICE DATA:

Actuators shall be designed for pneumatic operation up to a maximum pressure of 140 PSIG (10 Bar) and for temperature ranges of -40°F (-40°C) to +200°F (+95°C). Filtered air is recommended but not required. All double acting and spring return units shall be suitable for both on-off and throttling applications. Optional units shall be able to operate with other media such as hydraulic oil or water, consult factory for further information.

## OPTIONAL EQUIPMENT

See Bray brochure #1030 for Solenoid, brochures #1011 and #1029 for Pneumatic and Electro-Pneumatic Positioners and brochures #1012 and #1015 for Valve Status Monitors.

**Diagram A** Travel Stop Adjustments

The 0° and 90° travel positions have travel adjustments of +5° max. to –5° min.

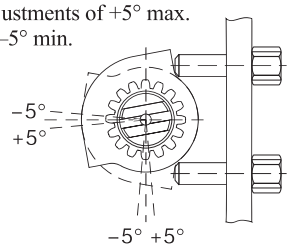


**Caution:** Care should be taken not to over adjust the travel stops in too far or out too far.

## ACTUATOR COMPONENTS

| Item No. | Qty. | Description |
|---|---|---|
| 1 | 1 | Body |
| 2 | 2 | Piston |
| 3 | 1 | Pinion |
| 4 | 2 | End Cap |
| 5* | 12 max. | Spring Cartridge Assembly |
| 6 | 1 | Upper Bearing |
| 7 | 1 | Lower Bearing |
| 8 | 1 | Retaining Ring |
| 9 | 1 | Nylon Washer |
| 10 | 2 | Acetal-Bearing Pad |
| 11 | 2 | Acetal-Guide Ring |
| 12 | 2 | Stop Nut |
| 13 | 2 | Travel Adjusting Screw Stop |
| 14 | 2 | O-Ring–Travel Stop |
| 15 | 1 | Acetal Spacer |
| 16 | 1 | Travel Stop |
| 17 | 8 | Hex Head Cap Screw |
| 18 | 8 | Washer |
| 19 | 2 | O-Ring–Piston |
| 20 | 2 | O-Ring–End Cap |
| 21 | 1 | O-Ring–Shaft-Top |
| 22 | 1 | O-Ring–Shaft-Bottom |
| 23 | 1 | Indicator Pointer |
| 24 | 1 | Indicator Pointer Screw |

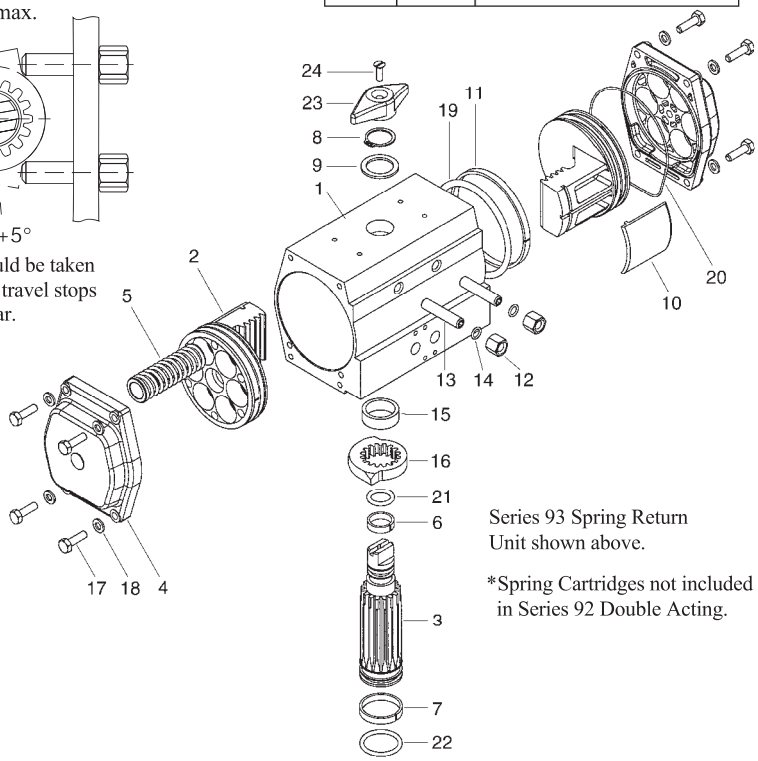


Series 93 Spring Return Unit shown above.

*Spring Cartridges not included in Series 92 Double Acting.

Accredited by the Dutch Council for Certification
Aqs Quality Evaluations Inc. Quality Assurance Certification
ACCREDITED REGISTRAR ANSI-RAB
ISO 9001
Certificate Number: 31938

DISTRIBUTOR

All statements, technical information, and recommendations in this bulletin are for general use only. Consult Bray representatives or factory for the specific requirements and material selection for your intended application. The right to change or modify product design or product without prior notice is reserved.

Patented and patents applied for all over the world.

Bray® is a registered trademark of BRAY INTERNATIONAL, Inc.

Bray® CONTROLS
A Division of BRAY INTERNATIONAL, Inc.
13333 Westland East Blvd. Houston, Texas 77041
281.894.5454 FAX 281.894.9499 www.bray.com

© 2003 Bray International. All rights reserved.

*ATTENTION*
THIS DOCUMENT IS VALID IF AND ONLY IF YOU PERSONALLY DOWNLOADED IT FROM WWW.BRAY.COM
IF YOU RECEIVED THIS DOCUMENT FROM ANY OTHER SOURCE, PLEASE TAKE INTO CONSIDERATION THAT ALTERATIONS
COULD HAVE BEEN MADE, FOR AN ORIGINAL COPY, PLEASE CONTACT BRAY VALVE AT 281-894-5454

| Act Size | AIR | A | B | C | D | E | F | G | H | J | K | L | M | N | P |
|---|---|---|---|---|---|---|---|---|---|---|---|---|---|---|---|
| 93 | 1/4 NPT | 1.97 | 2.76 | .75 | .51 | 5.78 | 9.10 | 1/4-20UNC | 5/16-18UNC | .50 | – | 1.46 | 4.61 | 2.47 | 1.97 |
| 119 | 1/4 NPT | 2.76 | 4.92 | 1.18 | .87 | 7.28 | 12.40 | 5/16-18UNC | 1/2-13UNC | 1.12 | – | 2.20 | 5.52 | 2.78 | 2.37 |
| 128 | 1/4 NPT | 2.76 | 4.92 | 1.18 | .87 | 8.09 | 12.81 | 5/16-18UNC | 1/2-13UNC | 1.12 | – | 2.20 | 6.32 | 2.88 | 2.70 |

| Act Size | Q | S | T | U |
|---|---|---|---|---|
| 93 | 1.58 | 1.32 | .79 | .47 |
| 119 | 1.58 | 1.64 | .79 | .47 |
| 128 | 1.58 | 1.64 | .79 | .47 |

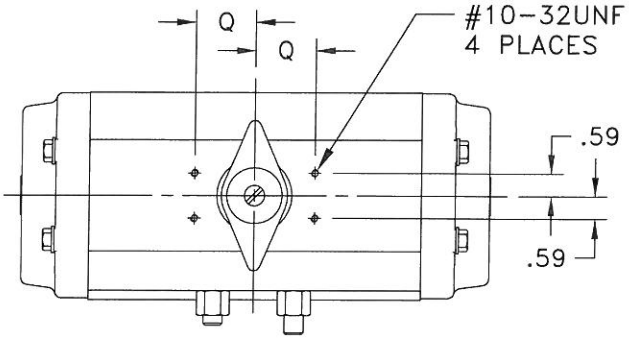


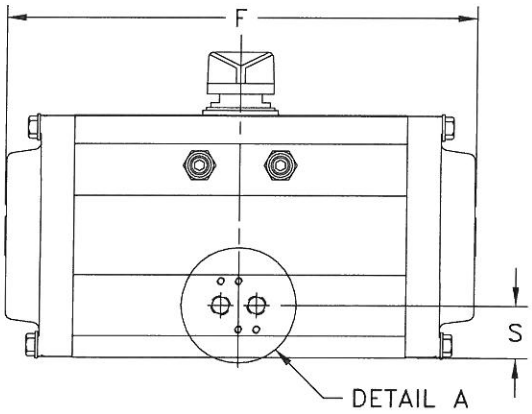


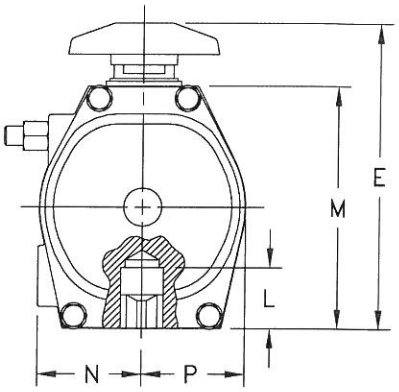


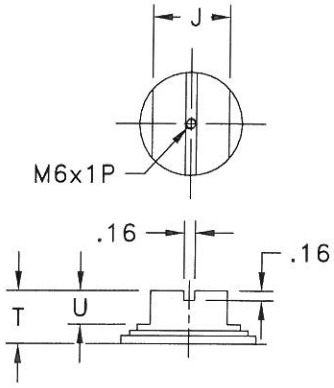


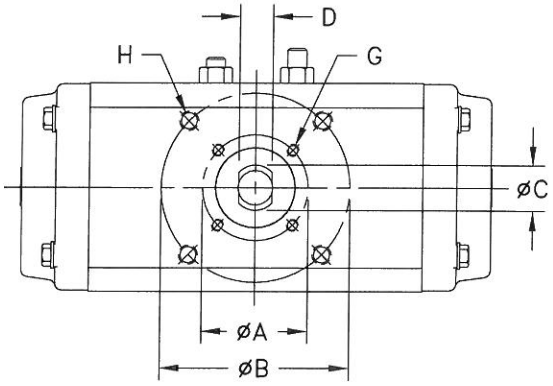


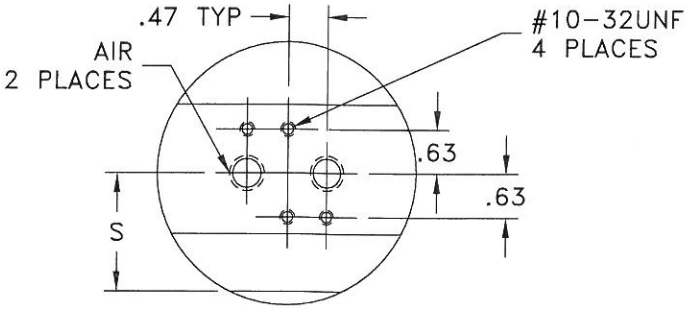


DETAIL A
NAMUR MOUNTING PAD

NOTES: SERIES 92 ACTUATORS (DOUBLE ACTING) AND SERIES 93 (SINGLE ACTING) ARE DIMENSIONALLY THE SAME.

Customer/Project _____

Inq./P.O. No. _____

Bray Order No. _____

Certified Correct By _____ Date _____

DIMENSIONS (Inches)
PNEUMATIC ACTUATOR, SERIES 92/93, SIZES 93 - 128,
WITH INTERNAL BI-DIRECTIONAL TRAVEL STOP

Bray CONTROLS
A Division of BRAY INTERNATIONAL, Inc.

| SHEET | REV. |
|---|---|
| 1 OF 1 | RFP |

DRAWING NO. ES11A-0721

ERN 12301

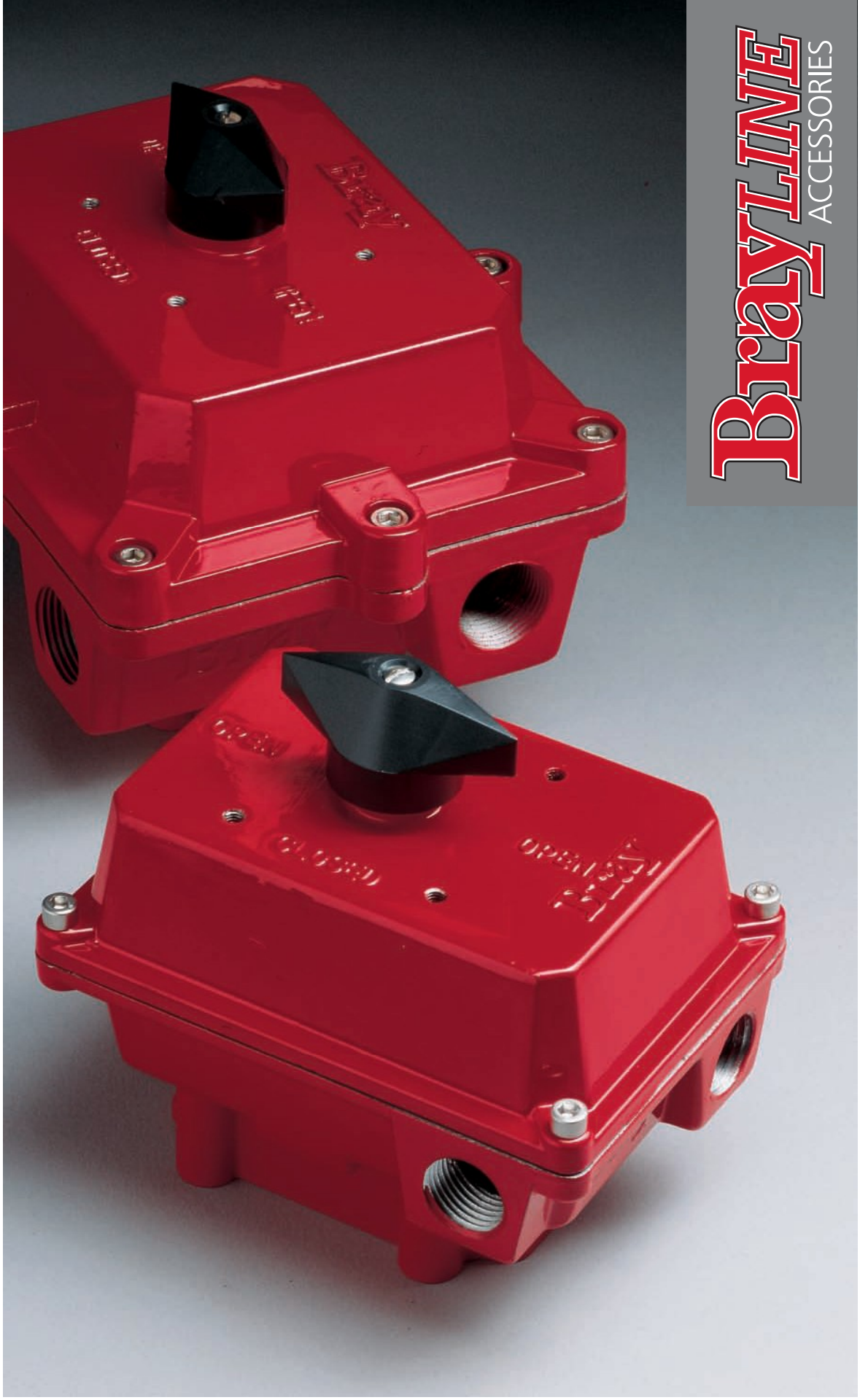

# BrayLINE ACCESSORIES

**SERIES 50 – 0400, 0700**
WITH MICRO SWITCHES,
PROXIMITY & PNEUMATIC SWITCHES

# VALVE STATUS MONITORS

NEMA 4, 4X & 4,4X,7,9

CELEBRATING 20 YEARS

The High Performance Company

# FEATURES

Bray Controls is proud to offer the Brayline Series 50 Valve Status Monitor, the future of valve position signaling. Bray's extensive field experience, research and development has produced the finest multi-purpose switch/control monitors for industrial plant automation. The Series 50 signals actuator and valve position to local and remote stations. The Series 50-0400 unit has a die cast aluminum housing which is waterproof (NEMA-4,4X). The Series 50-0700 housing is also die cast aluminum and rated waterproof and explosion proof (NEMA-4,4X,7,9).

The units have been designed for ease of wiring and a wide variety of switches. Both feature the same high quality internal parts and the same rugged reliability.

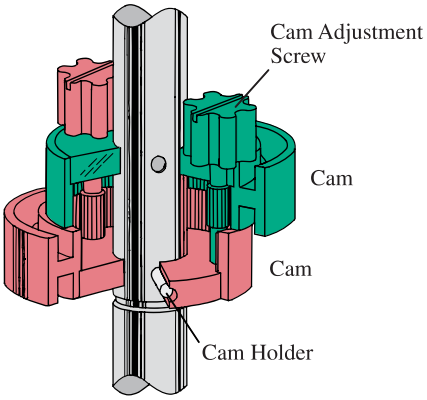


**(A) CAMS / CAM ADJUSTMENT** Featured in the Series 50 Valve Status Monitors are Bray's uniquely designed cams. A cam for each switch is mounted directly to the output shaft and each cam is color coded – red adjustment screw matches red cam (which closes valve), green screw matches green cam (which opens valve). The cams are *infinitely* adjustable from the top by finger touch or regular screw driver with no special tools needed. The adjustment screws rotate the eccentric shaped cams. The cams will not slip out of adjustment from line vibration. Standard factory settings are to the open and closed positions for 90° travel. To adjust the cams, first loosen the locking screw, make cam adjustment then retighten locking screw.

**(B) O-RING SEALS** Seals on the shaft and housing provide a waterproof enclosure and prevent internal corrosion.

**(C) SHAFT BEARINGS** The Series 50-0400 has acetal bearings on the top and bottom of the shaft which reduce friction and eliminate shaft binding.

**(D) SWITCHES** Both Valve Status Monitors come standard with 2 SPDT Micro switches. For other available switches consult the back page of this brochure.

**(E) TERMINAL BLOCK** The internal switches are pre-wired to a terminal block. The block has been designed for ease of wiring installation with clearly marked wire numbers for both open and closed switches.

**(F) CONDUIT ENTRIES** For ease of wiring, the Series 50 features two conduit entries. The Series 50-0400 unit has 1/2" NPT conduit connections, and the Series 50-0700 has 3/4" NPT conduit connections.

## SERIES 50–0400

This waterproof unit is UL listed and CSA, CE certified NEMA-4,4X. The Series 50-0400 features a die cast aluminum housing coated with a chemical resistant epoxy for further protection. The Series 50-0400 is an excellent choice for use in a wide range of applications where harsh chemical conditions are found.

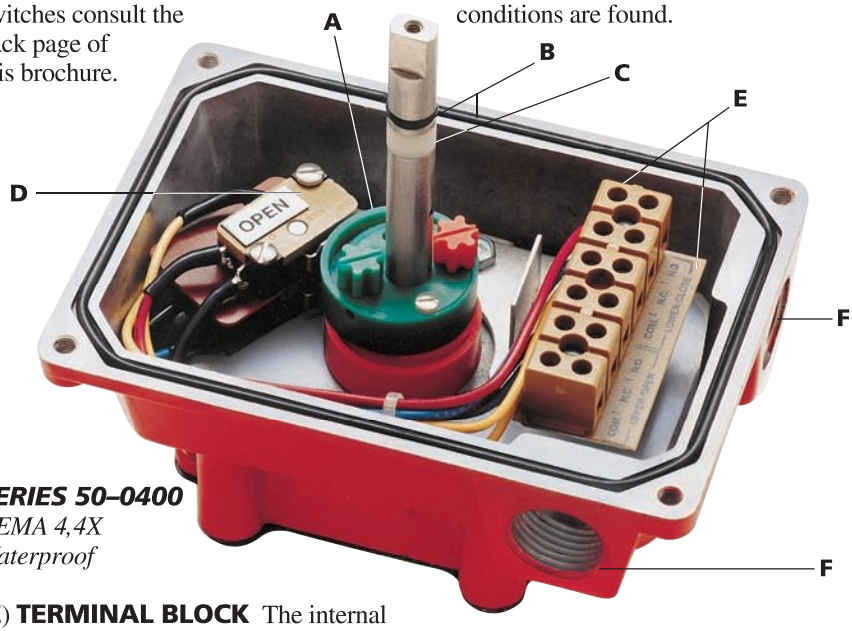


***SERIES 50–0400***
*NEMA 4,4X*
*Waterproof*

## SERIES 50–0700

The Series 50-0700 Valve Status Monitor is for application in hazardous locations. The waterproof/explosion proof housing is CSA (NRTL-C/US) certified Class I: Groups C & D, Class II: Groups E, F & G, Div. 1&2 and designed to meet UL NEMA–4,4X,7,9 and IP 65. The housing contains bronze bearings, top and bottom, which meet flame path requirements.

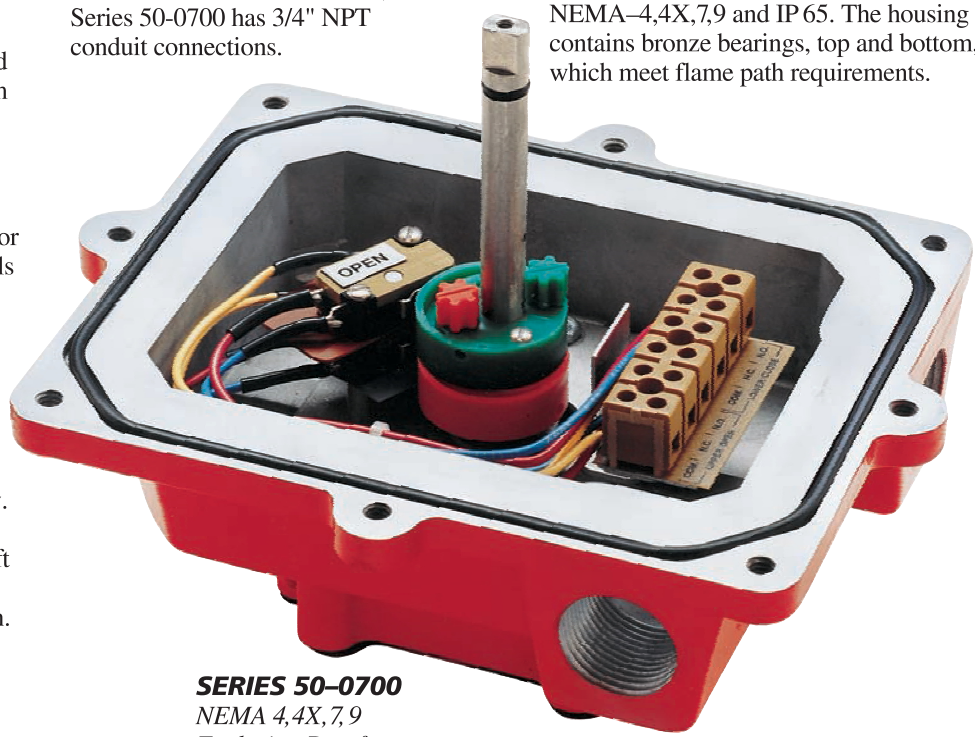


***SERIES 50–0700***
*NEMA 4,4X,7,9*
*Explosion Proof*

## CAPTIVE HOUSING BOLTS

The housing covers of Bray Valve Status Monitors are attached to the housing bases by stainless steel bolts. When the cover is removed the bolts are held captive in the cover. This prevents time consuming problems caused from lost or misplaced bolts.

## SERIES 50-0700 ACCESSORY

A Bray Series 63 solenoid valve may easily be mounted to the Series 50-0700 Valve Status Monitor. The solenoid and monitor are electrically wired together to a common terminal block within the switch box.

## POSITION INDICATORS

Bray has specially designed position indicators which locally signal valve position. The pointer, made of ABS, comes standard with all Series 50 units.

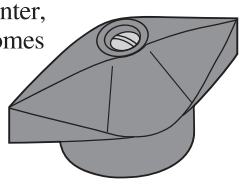

Bray offers a highly visible valve status display as an option. Prominently labeled and color coded – yellow for open, red for closed – the display indicates valve position through the full range of travel. Made of high impact, heat and chemical resistant clear polycarbonate, this display withstands caustic washdown and offers excellent corrosion protection. The display is designed to directly mount to the Series 50 housings.

Display height is 2.97 inches. For cover removal, allow a minimum of 2.72" for 50-0400 units and 3.00" for 50-0700 units.

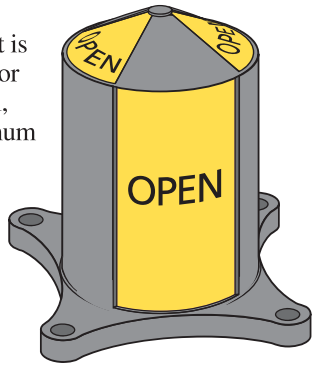


## DIRECT MOUNTING OF SERIES 50 VALVE STATUS MONITOR TO BRAY PNEUMATIC ACTUATORS

A compact, modular design allows direct mounting of the Brayline Valve Status Monitor to Bray Series 92 double acting and Series 93 spring return pneumatic actuators without any brackets or couplings. The mounting pattern complies with VDI/VDE 3845 (NAMUR recommendations).

# DIMENSIONS

## SERIES 50-0400

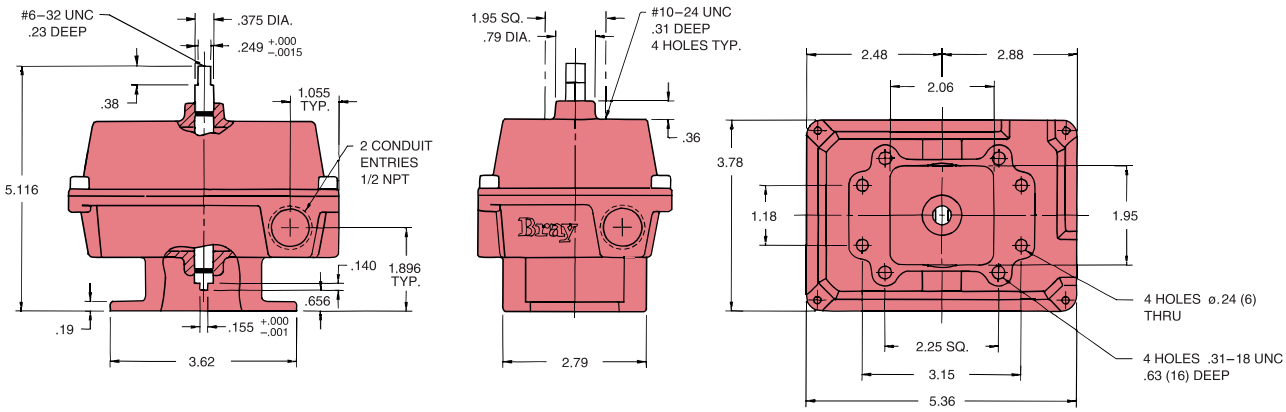


## SERIES 50-0700

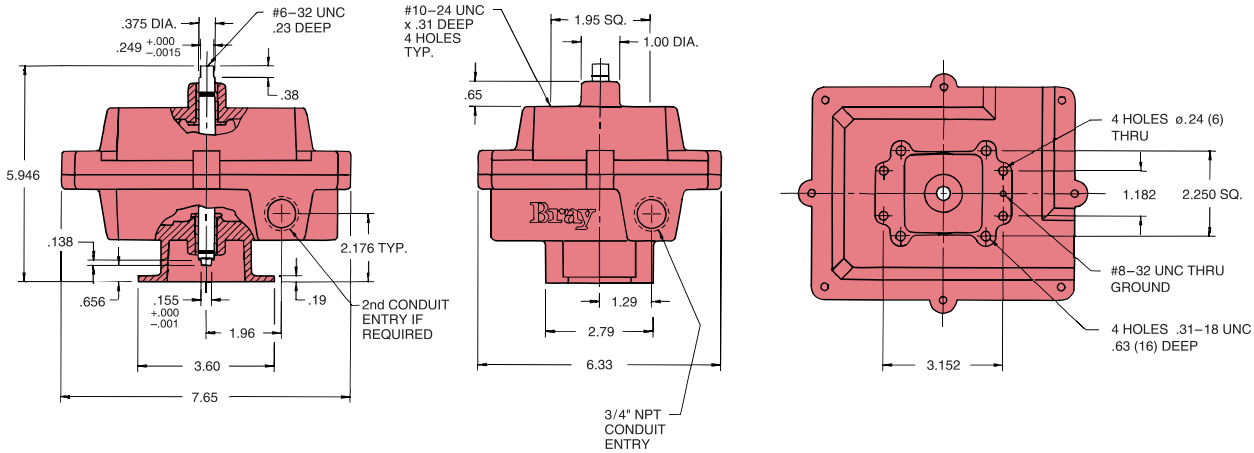

# SWITCHES

## MICRO SWITCHES

Economical switches with the highest current ratings on the market.

2, V3 TYPE SPDT SWITCHES
Contact material is fine silver.
Max. Rating: 15A-120/250 VAC
15A-24VDC
Max. Temperature: 176°F (80°C)
4 or more switches are available.

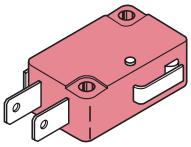

2, TYPE DPDT SWITCHES
Contact material is fine silver.
Max. Rating: 10A-120/250 VAC
10A-24VDC
Max. Temperature: 158°F (70°C)

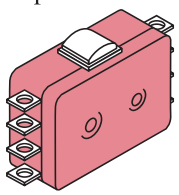

## PROXIMITY SWITCHES

Sealed against explosive gases and liquids, these switches offer long, trouble free life.

2, V3 TYPE N INDUCTIVE SWITCHES
(Intrinsically safe)
Supply Volts: 5-25VDC
Nominal Voltage: 8VDC
Load Current: <1mA >3mA
Max. Temperature: 212°F (100°C)
Other types available, consult factory.

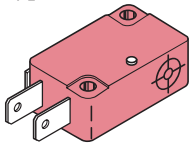

2, V3 TYPE E2 INDUCTIVE SWITCHES
Supply Volts: 5-25VDC
Nominal Voltage: 8VDC
Load Current: <1mA >3mA
Max. Temperature: 212°F (100°C)
Other types available, consult factory.

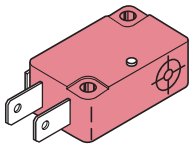

## PNEUMATIC SWITCH

For hazardous locations.
2 switches are provided with 2 ports and vents.
Rating: 150 psi (10 bar)
Connections: 1/8" NPT
Max. Temperature: 176°F (80°C)

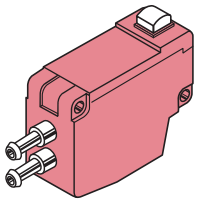

## POTENTIOMETER

For analog feedback of precise valve position a potentiometer can be mounted within the Series 50–0700 housing. The standard value is 1000 ohms, and the standard power rating at 158°F (70°C) is 1 watt.

## REED SWITCHES

2 magnetic reed switches (hermetically sealed) are available upon request.

## MICRO SWITCHES

SPDT

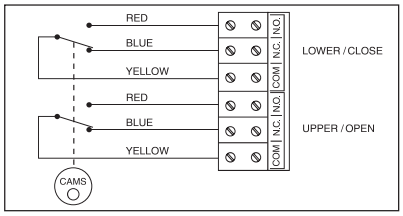


DPDT

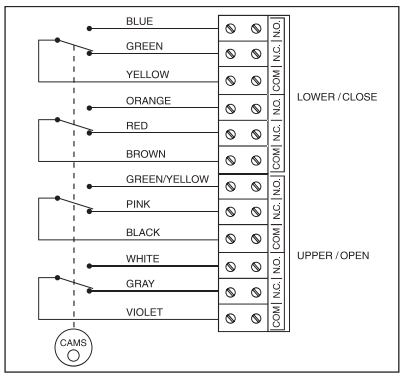


## PROXIMITY SWITCHES

2 WIRE TYPE N

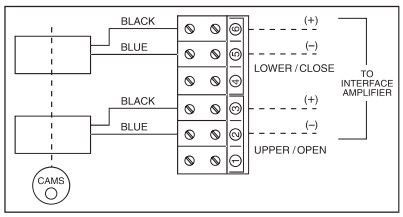


3 WIRE TYPE E2

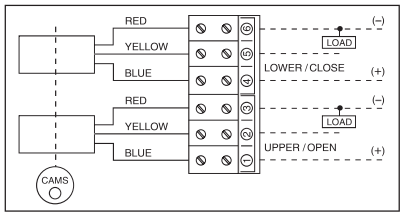


## PNEUMATIC SWITCHES

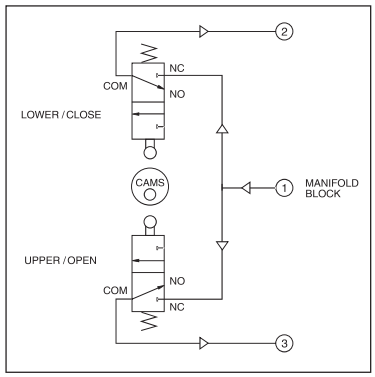


DISTRIBUTOR

All statements, technical information, and recommendations in this bulletin are for general use only. Consult Bray representatives or factory for the specific requirements and material selection for your intended application. The right to change or modify product design or product without prior notice is reserved.
United States patent number 5,305,781.
Other patents issued and applied for worldwide.

Bray® CONTROLS
A Division of BRAY INTERNATIONAL, Inc.
13333 Westland East Blvd. Houston, Texas 77041
281/894-5454 FAX 281/894-9499 www.bray.com

Bray® is a registered trademark of BRAY INTERNATIONAL, Inc.
© 2004 Bray International. All rights reserved. B-1012 10/04

**Bray** CONTROLS CANADA CORPORATION

SERIES 50
CN-061057
Date: October 2006

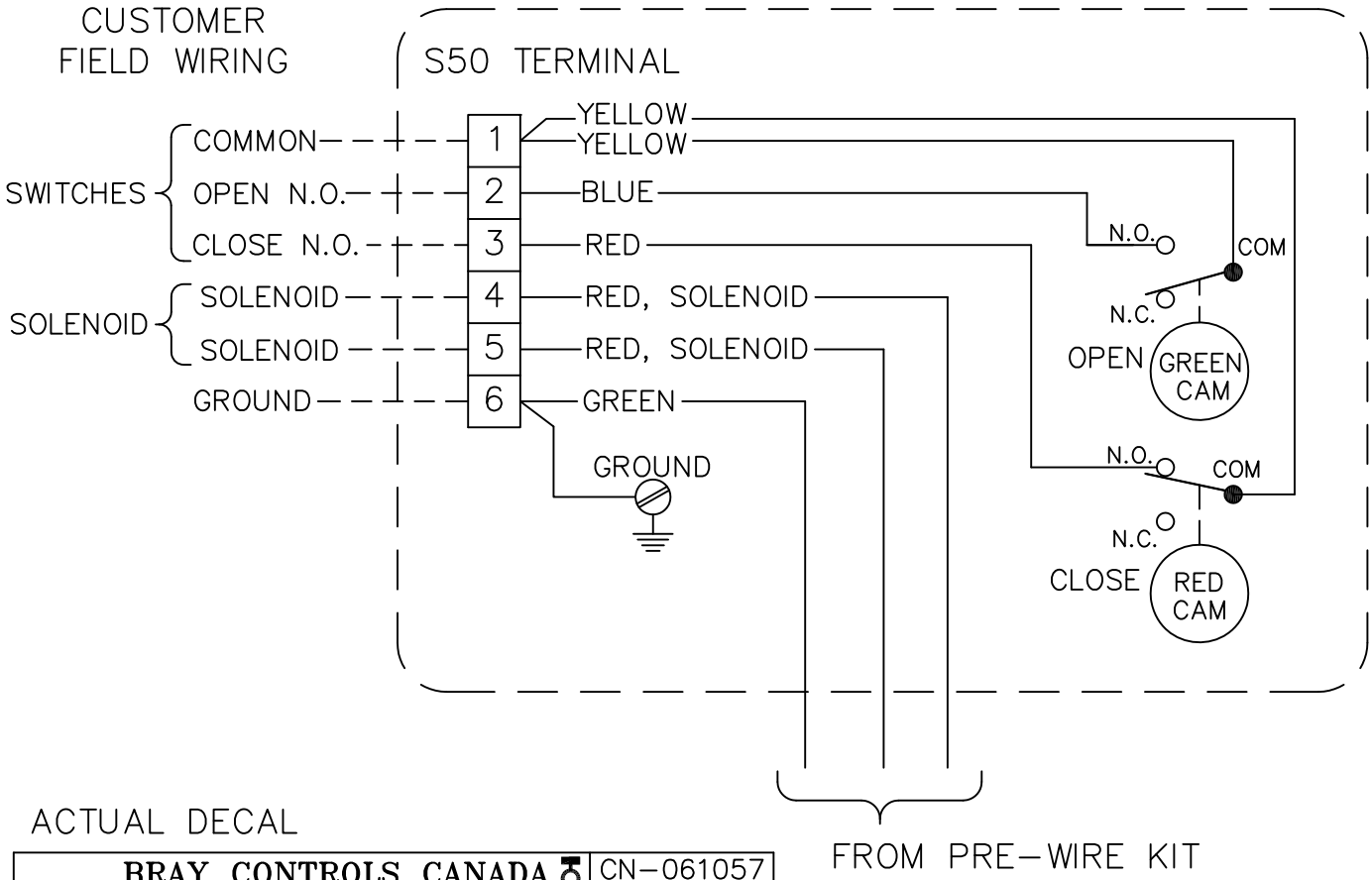


ACTUAL DECAL

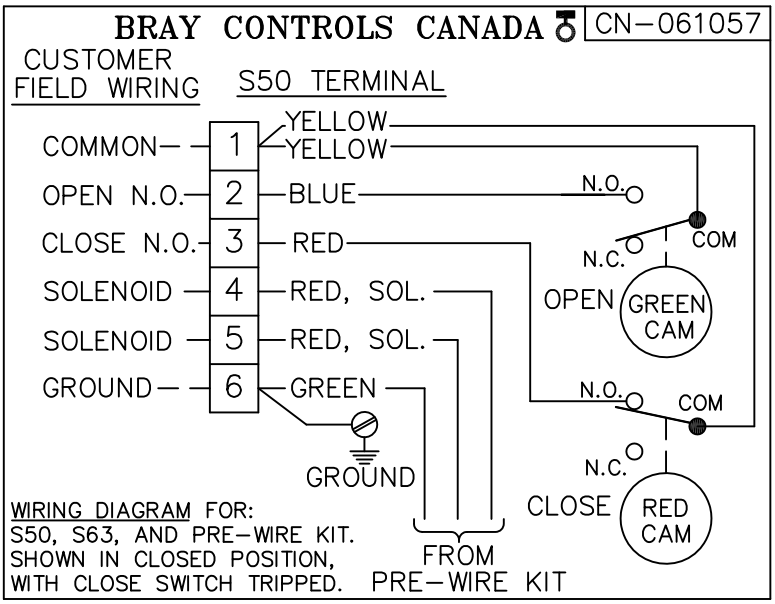


NOTE: SHOWN IN CLOSED POSITION, WITH CLOSE SWITCH TRIPPED.

Valve Size _____ Flg. Drilling _____
Pressure Rating _____
Distributor _____
CUSTOMER _____
Project Number _____
Contractor _____
Bray Order _____
Certified Correct By S.S. Date Oct. 2006

The High Performance Company **BRAY CONTROLS CANADA**
A Subsidiary of BRAY INTERNATIONAL, Inc.

WIRING DIAGRAM FOR
NEMA 4 ASSEMBLIES INCLUDING
S63 SOLENOID, S50 STATUS MONITOR,
AND PRE-WIRE KIT.

| Series | Size | Part No. | Material Trim Code | Drawing No. |
|---|---|---|---|---|
| | | | | CN-061057 |

**Bray**

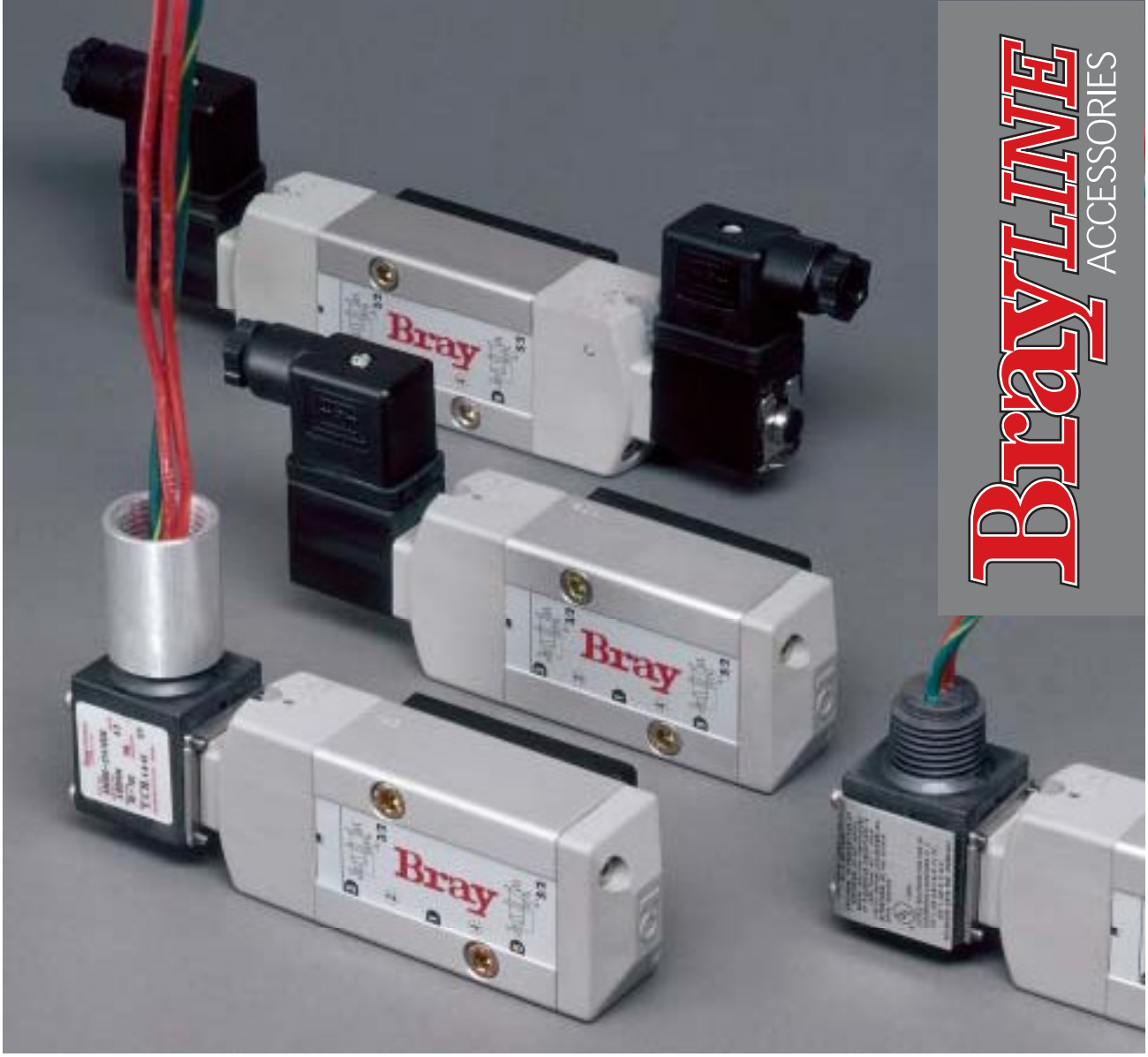


# BrayLINE ACCESSORIES

**SERIES 63** NEMA 4 & NEMA 4,4x, 7,9
SINGLE & DUAL COIL NPT & DIN
CONVERTIBLE 3-WAY & 4-WAY

# SOLENOIDS

PILOT OPERATED SPOOL CONTROL VALVES

Far superior in performance when compared to the commonly used poppet type valves, the rugged Series 63 delivers long, trouble-free service.

## FEATURES

Bray Controls offers the high flow Brayline Series 63 Solenoid Valve. The compact, modular, pilot operated spool control valve is convertible from 3-Way (3/2) to 4-Way (5/2). These units can be used with either spring return or double acting actuators where on/off electrical operation is required. Three standard coil housings/connectors are available: General Purpose Watertight (NEMA 4,4x) and Explosion Proof (NEMA 4,4x,7&9) units have 1/2" NPT connections, and IP65 DIN units have cable gland PG9 connectors. All housings types are offered with single or dual coils. The coils are UL recognized and CSA certified. All Series 63 solenoids carry the CE mark.

## MANUAL OVERRIDE

Each unit contains as standard a mechanical manual override located on the solenoid valve block. In the event of electrical power failure, overriding is simply a matter of rotating the manual override screw which will divert the air from one chamber of the pneumatic actuator to the other.

## DIRECT MOUNTING

Meeting NAMUR (VDI/VDE 3845) standards, all Brayline Series 63 solenoid valves direct mount to the integral porting system of Bray Series 92/93 pneumatic actuators. No external piping is required. Bray's direct mounting permits quick and simple field installation.

## SERIES 55 SPEED CONTROL

Speed controls that allow independent control of speed in both directions of actuator travel are optionally available.

## CONVERTIBLE 3 & 4 WAY

Solenoid is shipped with both 3-Way (marked 3/2) and 4-Way (marked 5/2) flow plates, flow gaskets, O-rings that mount between flow plate and actuator, and mounting bolts.

## OPTIONS

The Series 63 is available in the following options: stainless steel housings, low-powered units and intrinsically safe units. Intelligent, digital Bus solenoids are offered in DeviceNet and Profibus-PA protocols, and AS-I Interface solenoids with IP65 DIN/PG9 cable gland connectors are available. All direct mount to Bray pneumatic actuators.

The High Performance Company

# SPECIFICATIONS

## COIL HOUSINGS

Three standard coil housings are offered. The watertight (NEMA 4, 4x) housing offers a molded and potted coil with UL recognized components and CSA certification. The watertight and explosion proof (NEMA 4,4x,7,9) housing is UL listed and C.S.A. certified for hazardous locations Class I, Div.1 (Groups A-D) and Class II, Div.1 (Groups E-G).

The IP65 DIN housing has UL recognized components and CSA certification.

Standard solenoid valves are supplied as single coil units. Double coil units are also available for customers who require actuators to remain in last position during electrical power failure.

**VALVE DESIGN** Pilot Operated Spool

**MEDIA** Dry or lubricated air or inert gases

**SPRING RETURN ACTUATORS** The Series 63 Solenoid Valve fills the spring chamber with supply air rather than drawing air from the surrounding atmosphere. This keeps the spring chamber clean and dry, and improves the performance and service life of the actuator.

## ELECTRICAL CHARACTERISTICS

### COIL ELECTRICAL:

NEMA Housings:
24, 120, 220, 240 Volts AC, 50-60 HZ
6, 12, 24, 120 Volts DC, 50-60 HZ

IP65 DIN Housings:
24, 120, 240 Volts AC, 50-60 HZ
12, 24, 120 Volts DC, 50-60 HZ

Insulation-Class F Coils Maximum Temperature Rating: 311°F (155°C)

**FLOW - 1/4" PIPE:** $C_V = .7$
Flow = 30 scfm, 150 psi max.

**NOMINAL POWER (Watts)**
NEMA Housings: A.C - 6.3, DC - 6.9
DIN Housing: A.C - 2.5, DC - 3.0

**OPERATING SPEED:** 10 cycles per minute - with more if needed

**DUTY CYCLE:** Continuous

### FLOW SCHEMATICS

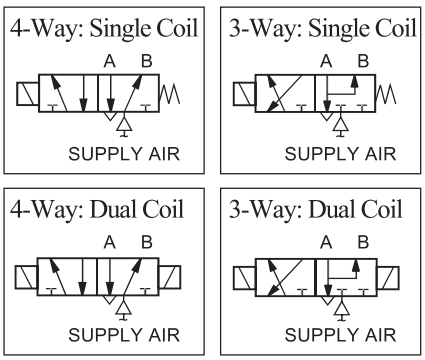


## MECHANICAL CHARACTERISTICS

### MOUNTING:

NAMUR (VDI/VDE 3845), mountable in any position, hardware included

### MATERIALS:

Body: Anodized Aluminum
Spring: Phosphate treated black steel
Shading Coil: Copper
Seals: NBR + PUR
Core / Tube: Stainless / Brass
End Covers & Plate: 6/6 glass filled polyamide (PA/FV)
Spool: Aluminum
Internal Parts: Zamak, Steel, Acetal

**PNEUMATIC PORTS:** 1/4" NPT

### CONNECTIONS:

NEMA Housings: Electrical: 1/2" NPT
DIN Housing: Electrical: Cable Gland PG9

### CONSTRUCTION:

Standard construction is molded and potted coil with 18" leads, Class F Insulation. Other insulation classes available. The IP65 DIN coil and magnet structure are epoxy encased. Molded Cordsets and connectors are available for IP65 DIN coil housings, please consult Bray representative or factory for further information.

### NORMAL AMBIENT TEMPERATURE RANGE

NEMA Housings:
AC: -13°F (-25°C) to +140°F (+67°C)
DC: -13°F (-25°C) to +77°F (+25°C)

DIN Housing: AC & DC:
-13°F (-25°C) to +140°F (+67°C)

### OPTIONAL ENCLOSURE:

Low power, intrinsically safe DIN Housing, CENELEC (Ex d,m,em & i) listed.

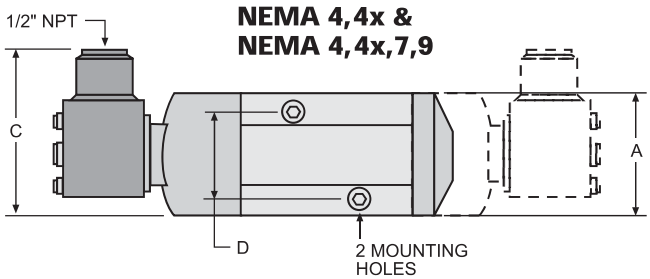


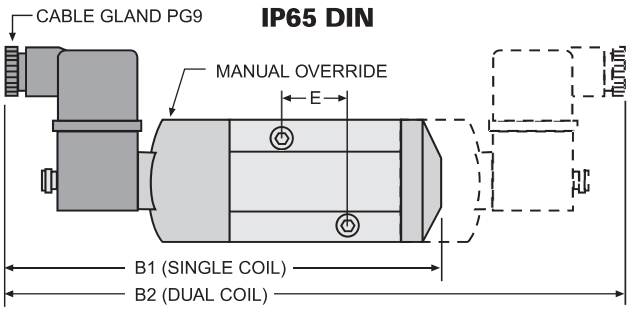


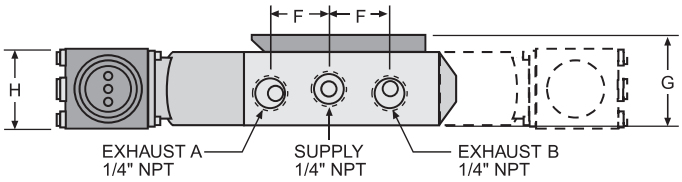


## DIMENSIONS

| Valve Size | Coil Housing | A | B1 | B2 | C | D | E | F | G | H |
|---|---|---|---|---|---|---|---|---|---|---|
| 1/4" | NEMA 4, 4x | 1.77 | 5.75 | 7.84 | 2.40 | 1.26 | 0.95 | 0.87 | 1.31 | 1.18 |
| 1/4" | NEMA 4,4x,7,9 | 1.77 | 5.75 | 7.84 | 2.40 | 1.26 | 0.95 | 0.87 | 1.31 | 1.18 |
| 1/4" | IP65 DIN | 1.77 | 6.28 | 8.90 | 2.82 | 1.26 | 0.95 | 0.87 | 1.31 | — |

All statements, technical information and recommendation in this bulletin are for general use only. Consult Bray representatives or factory for the specific requirements and material selection for your intended application. The right to change or modify product design or product without prior notice is reserved.

Bray® CONTROLS
A Division of BRAY INTERNATIONAL, Inc.
13333 Westland East Blvd. Houston, Texas 77041
281.894.5454 FAX 281.894.9499 www.bray.com

Bray® is a registered trademark of BRAY INTERNATIONAL, Inc.
© 2003 Bray International. All rights reserved.

Bray Controls is certified to ISO 9001 standards, certificate number 31938.
B-1030 4/03

Bray®

Your Global Flow Control Partner™

# Series 92/93
# Pneumatic Actuator
## Operation and Maintenance Manual

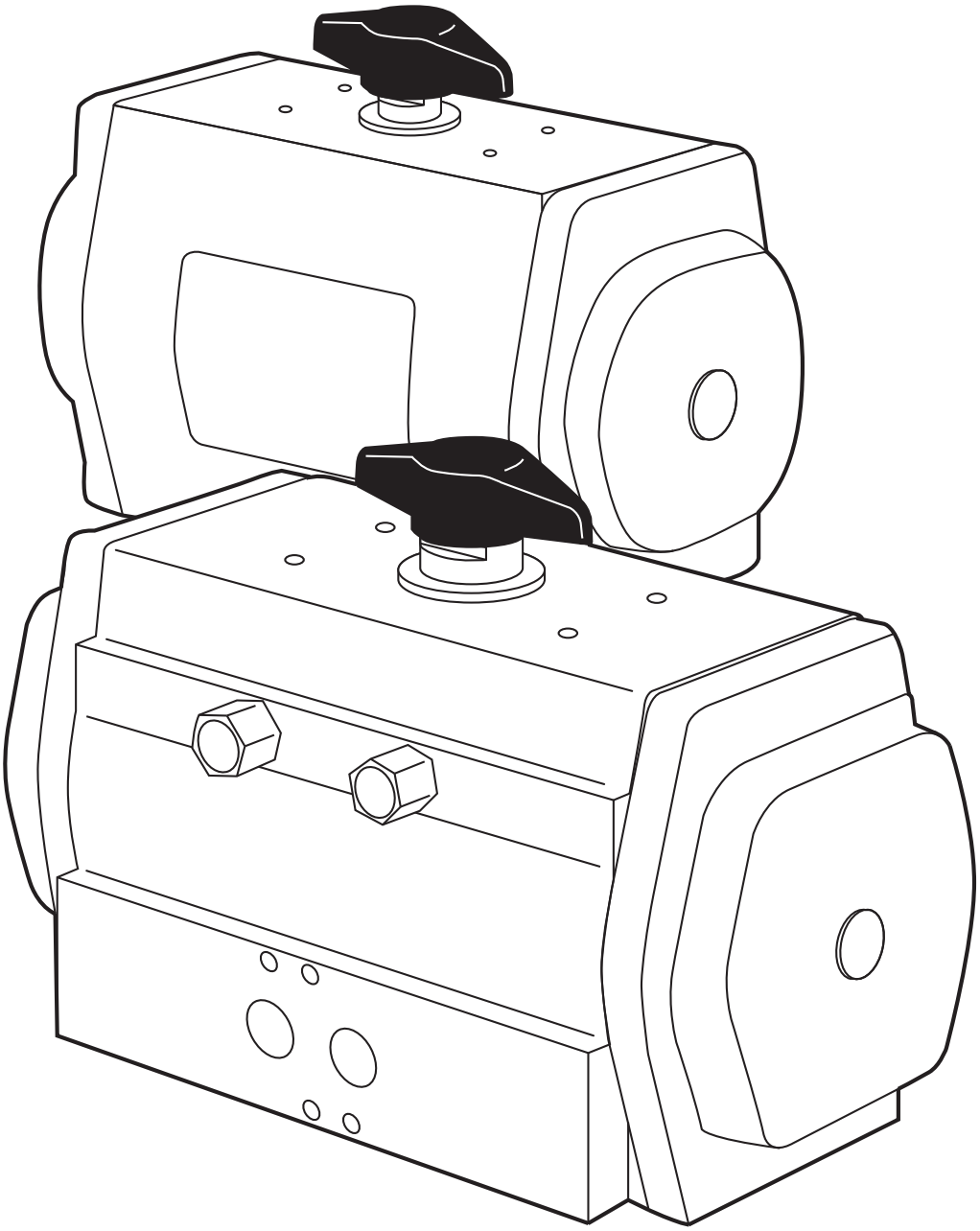

LLOYD'S REGISTER • LRQA

ISO 9001

# TABLE OF CONTENTS

Safety Information - Definition of Terms . . . 2
Hazard-free use . . . 2
Qualified Personnel . . . 2
Description of Operation . . . 3
Operating Medium . . . 3
Operating Temperature . . . 3
Installation . . . 3
- Fail Open Assemblies . . . 3
- Fail Open Method 1 . . . 4
- Fail Open Method 2 . . . 4
- Fail Open Method 3 . . . 4
- Fail Closed Assemblies . . . 5

Mounting the Actuator to the Valve . . . 5
Setting the Travel Stops . . . 5
Maintenance . . . 6
Troubleshooting . . . 7
Assembly . . . 7
Final Assembly and Testing . . . 8
Disassembly . . . 8
Adding Spring Cartridges . . . 9
Removing Spring Cartridges . . . 10
General Pneumatic System Recommendations . . . 11
Dimensional Data . . . 11
Series 92/93 Exploded View . . . 12

*For information on this product and other Bray products please visit us at our web page - www.bray.com*

# Read and Follow These Instructions
# Save These Instructions

## SAFETY INFORMATION - DEFINITION OF TERMS

| | |
|---|---|
| **WARNING** | indicates a potentially hazardous situation which, if not avoided, **could** result in death or serious injury. |
| **CAUTION** | indicates a potentially hazardous situation which, if not avoided, may result in minor or moderate injury. |
| **NOTICE** | used without the safety alert symbol indicates a potential situation which, if not avoided, may result in an undesirable result or state, including property damage. |

## HAZARD-FREE USE

This device left the factory in proper condition to be safely installed and operated in a hazard-free manner. The notes and warnings in this document must be observed by the user if this safe condition is to be maintained and hazard-free operation of the device assured.

Take all necessary precautions to prevent damage to the actuator due to rough handling, impact, or improper storage. Do not use abrasive compounds to clean the actuator, or scrape metal surfaces with any objects.

The control systems in which the actuator is installed must have proper safeguards to prevent injury to personnel, or damage to equipment, should failure of system components occur.

## QUALIFIED PERSONNEL

A qualified person in terms of this document is one who is familiar with the installation, commissioning and operation of the device and who has appropriate qualifications, such as:

- Is trained in the operation and maintenance of pneumatic equipment and systems in accordance with established safety practices
- Is trained or authorized to energize, de-energize, ground, tag and lock electrical and pneumatic circuits and equipment in accordance with established safety practices
- Is trained in the proper use and care of personal protective equipment (PPE) in accordance with established safety practices
- Is trained in first aid
- In cases where the device is installed in a potentially explosive (hazardous) location – is trained in the operation, commissioning, operation and maintenance of equipment in hazardous locations

**WARNING**

The actuator must only be installed, commissioned, operated and repaired by qualified personnel.

The device generates large mechanical force when pressurized with air, and/or powered by springs.

The actuator stores a large amount of energy when pressurized with air, and/or when the springs are compressed.

To prevent injury, installation, commissioning, operation and maintenance must be carried out under strict observation of the safety regulations.

Reference is specifically made here to observe the applicable safety regulations for actuators installed in potentially explosive (hazardous) locations.

Correct and safe operation of this actuator is dependent upon proper transport, storage and installation in addition to proper operation and maintenance.

## DESCRIPTION OF OPERATION

The Bray Series 92/93 Pneumatic Actuators feature a double piston, rack and pinion mechanism designed to automate quarter-turn valves. In the Series 92 Double-Acting Actuator, pressure introduced through Port A (the left port when facing the ports) forces the pistons away from each other and causes the pinion to rotate in a counter-clockwise direction. Pressure introduced through Port B (the right port when facing the ports) is directed through an internal passage to the opposite side of the pistons, which forces the pistons together and rotates the pinion in a clockwise direction. Normally, the clockwise rotation (pistons moving together) closes the attached valve, and the counter-clockwise rotation (pistons moving apart) opens the attached valve.

In the Series 93 Spring-Return Actuators, spring cartridges have been added to push the pistons together by spring force in the event the compressed air pressure being lost. This spring force normally closes the attached valve. However, in the event that the valve is required to open under spring force, refer to the fail open portion of the Installation section.

## OPERATING MEDIUM

**NOTICE**

The recommended operating medium is clean, dry industrial compressed air, 40 - 140 psig (3 - 10 bar.) An air line lubricator is suggested for fast cycling applications, i.e. more than 10 cycles per minute. Other media such as hydraulic oil, water, or certain other inert gases may also be used in some instances, but the factory should be consulted for specific applications.

## OPERATING TEMPERATURE

**NOTICE**

The recommended operating temperature range is -20°F to 200°F (-29°C to 95°C). Below 32°F (0°C) care must be taken to prevent condensed moisture from freezing in the air supply lines. Consider the use of an air dryer if the device is installed in a cold location. The air dryer must be capable of lowering the dew point of the air to a temperature 36°F (20 °C) lower than that of the surrounding environment. The air dryer must be properly maintained and kept in operation.

## INSTALLATION

Bray Series 92/93 Actuators are designed to mount directly on the top plate of Bray Valves. Before the actuator is mounted on a valve, it is a good practice to lubricate the output bore of the actuator with thick grease. The grease will make it easier to remove the actuator from the valve stem, even after years of service.

Normally, the actuator is mounted with its long side parallel to the pipeline. A double acting actuator will normally rotate the valve stem clockwise to close, and counter-clockwise to open. Spring return actuators will normally rotate the valve stem clockwise to close with the spring stroke, and counter-clockwise to open with the air stroke. The normal operation of the spring cartridges is therefore fail closed.

Direction of operation may be changed to fail open by any one of several different methods. Refer to the Assembly Instructions and Exploded View on page 12 for more details.

### Fail Open Assemblies

If the actuator is attached to a valve, the butterfly valve disc is shipped in the full open position (as no air pressure is present to compress the springs and close the valve disc.) The sealing surface, or disc edge, is therefore exposed. Damage to that surface will cause premature seat failure.

**NOTE:** Consult a factory representative when a non-standard actuator configuration is made in the field or is being changed in the field. Example: Mounting an actuator perpendicular to the pipe due to space restrictions on site.

**CAUTION**

Use caution installing the valve being careful not to damage the disc edge. It is recommended to:

- Remove the actuator. Be sure to scribe the valve and actuator to ensure the re-installed actuator is in the exact same quadrant as originally configured
- Install the valve per the attached installation tag instructions
- Re-install the actuator ensuring it is in the proper quadrant

## Fail Open Method 1

Mounting the Actuator Perpendicular to the Pipeline

**NOTICE**

Fail Open Method 1 – Mounting the Actuator Perpendicular to the Pipeline – works only with concentric disc valves such as the Bray Series 20/21, 22/23 and 30/31 or other valves that allow the disc to be swung through the seat.

Turn the actuator so the long side is perpendicular to the pipeline. This will allow the spring cartridges to rotate the valve stem clockwise to open, and the air stroke to rotate the valve stem counter-clockwise to close. This is the easiest method if there is sufficient room to mount the actuator.

## Fail Open Method 2

Rotating the Pinion

**NOTICE**

Fail Open Method 2 – Rotating the Pinion - works only with concentric disc valves such as the Bray Series 20/21, 22/23 and 30/31 or other valves that allow the disc to be swung through the seat.

See Assembly (page 7) for detailed instructions on reinstalling the travel stop cam on the pinion.

**WARNING**

Before disassembly of the actuator, the pneumatic air supply must be completely disconnected from the actuator, and all compressed air stored within the actuator must be released. Auxiliary devices connected to the actuator, such as tubing, ball valves, solenoid air valves, valve positioners, etc. can block the release of air from within the actuator. Do not rely upon the features or controls of any auxiliary device to release the air from inside the actuator to render it safe for disassembly.

**WARNING**

Some actuators may have spring cartridges installed. Before disassembly, all spring cartridges must be placed into the relaxed (fully extended) position. All compressed air must be removed from inside the actuator (See previous warning) and the actuator pinion must be allowed to rotate so the springs may be relaxed. Care must be taken to verify that any device connected to the actuator, such as a valve mounted underneath, is not preventing the movement of the springs to the relaxed position.

Remove the end caps, spring cartridges and pistons from the actuator. Remove the pinion, rotate it 90°, and reinstall the pinion in the actuator. This will also allow the spring cartridges to rotate the valve stem clockwise to open, and the air stroke to rotate the valve stem counter-clockwise to close. This is the second easiest method, and allows the actuator to be mounted with its long side parallel to the pipeline.

## Fail Open Method 3

Reversing the Pistons

**NOTICE**

Fail Open Method 3 – Reversing the Pistons – works for all valves, but must be used with offset disc valves such as the Bray Series 40/41, 42/43 and 44/45, or other offset disc valves where the disc may only turn clockwise to close.

See Assembly (page 7) for detailed instructions on reinstalling the travel stop cam on the pinion.

Remove the end caps, spring cartridges and pistons from the actuator. Rotate the pistons so that the racks turn the pinion counter-clockwise as the pistons move toward each other. (With the air input ports of the actuator body facing you, the left hand piston rack should be on the side with the air ports.) This is the third easiest method, and allows the actuator to be mounted with its long side parallel to the pipeline, and clockwise to close rotation to be maintained.

## Fail Closed Assemblies

If the actuator is attached to a valve, the butterfly valve is shipped in the full closed position (as no air pressure is present to compress the springs and open the disc).

**CAUTION**

Installing the valve with the disc in the full closed position may create a compression set on the seat causing higher than expected torques or premature seat failure. It is recommended to:

- Remove the actuator. Be sure to scribe the valve and actuator to ensure the re-installed actuator is in the exact same quadrant as originally configured
- Install the valve per the attached installation tag instructions
- Re-install the actuator ensuring it is in the proper quadrant

## MOUNTING THE ACTUATOR TO THE VALVE

The actuator is attached to the valve by means of the studs and nuts furnished in the mounting kit. Thread the studs into the proper holes in the actuator, before installing the actuator on the valve. The studs should be snug in the bottom of the tapped holes; there is no need to torque them. Install the actuator on the valve making sure that the base of the actuator fits flat against the valve mounting flange. Use the nuts and washers from the kit to complete the installation. Torque the nuts in a diagonal pattern to assure equal loading of the studs.

## SETTING THE TRAVEL STOPS

The final step in the installation process is to check the travel stop settings. The travel stops are set for 90° of travel at the factory; however, each installation is different so they should be checked before putting the valve in service. The actuators are designed with a nominal 5° over or under travel at each end of rotation. A screwdriver, an open end or box end wrench and a hex wrench, of the appropriate size, are the only tools required to make the necessary adjustments. Refer to Figure 1 below.

**WARNING**

Before setting the travel stops, the pneumatic air supply must be completely disconnected from the actuator, and all compressed air stored within the actuator must be released. Auxiliary devices connected to the actuator, such as tubing, ball valves, solenoid air valves, valve positioners, etc. can block the release of air from within the actuator. Do not rely upon the features or controls of any auxiliary device to release the air from inside the actuator to render it safe for disassembly.

Remove the black Position Indicator Pointer (23) to expose the wrench flats on the top of the Pinion (3).

Rotate the valve to the desired position by using a wrench on the wrench flats on the top of the Pinion (3).

Loosen the Lock Nut (12) on the Travel Stop Screw (13). It is not necessary to remove the nut completely. Using the hex wrench, turn the screw in or out until the desired travel stop position is reached. While holding the screw with the

**Figure 1**

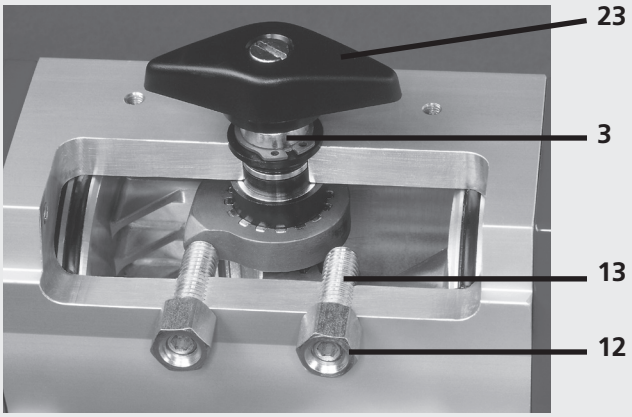


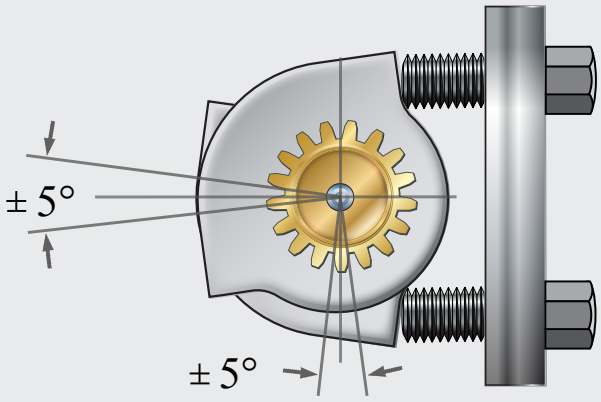

hex wrench, tighten the Lock Nut (12) with the box end wrench.

Replace the Position Indicator Pointer (23) making certain the pointer is aligned with the position of the valve, open or closed.

Some valves or operating conditions require that the actuator have more than 5° of travel adjustment. For these conditions, the Series 92/93 actuator can be fitted with extended travel stops in the end caps. (See page page 11 for instructions on finding dimensional data) Consult the Bray distributor in your area for this option.

Spring return actuators may be operated with only one air supply connected to Port A, since the spring cartridges will move the pistons when the air pressure in removed. This operation, however, will draw the surrounding atmosphere into the spring chambers through Port B.

**NOTICE**

To prevent contamination from entering the spring chamber, actuators configured to operate with only one air supply connected to Port A should be equipped with a 40 micron (or finer) filter element installed in Port B.

Even better service may be obtained on spring return actuators by installing a four-way solenoid, covering both Port A and Port B. A four-way solenoid will fill the spring chambers with compressed air from the plant air supply with each stroke. The plant air supply is often cleaner than the surrounding atmosphere, especially in heavy industrial or chemical areas.

## MAINTENANCE

The rugged components and factory lubrication combine to ensure a long and trouble-free service life for Series 92/93 actuators. Dirt, rust and water are the most common causes for shortened service life, and they typically enter the actuator through the air supply line.

Remove any dirt, rust, water or other contaminants from inside the actuator. Any damaged or corroded components must be replaced.

**NOTICE**

To lengthen service life, it is strongly recommended that an adequately sized filter with a 40 micron (or finer) element be installed adjacent to the inlet of the directional control (solenoid air) valve. Air lubricators are recommended for rapid cycling applications (10 cycles or more per minute.)

Routine maintenance of Series 92/93 actuators consists primarily of maintaining the air supply system by changing filter elements before they start by-passing, adding oil to lubricators before they run dry, and preventing water from entering the air lines.

The second most common cause of shortened service life is misalignment between the valve and the actuator. This can cause premature failure due to excessive side loads on the bearings and gear teeth.

**NOTICE**

To lengthen service life, the mechanical connection between the actuator and the valve should be verified to be properly aligned and free to rotate throughout the full range of valve travel.

## TROUBLESHOOTING

Table 1 shows several common symptoms and their remedies.

**Table 1**

| Symptom | Probable Cause | Check | Remedy |
|---|---|---|---|
| Loss of Power | Low air supply pressure, or damaged O-rings | Air supply pressure at actuator, leakage across O-rings | Boost air supply pressure, repair air supply line leaks, replace O-rings |
| Binding between valve and actuator | Misalignment of coupling | Alignment | Realign coupling |
| Valve "pops" out of seat and slams open | Valve torque too high, actuator sized too small, or insufficient air supply flow | Valve torque, actuator sizing calculations, size of air supply lines and/or solenoid valve | Repair valve, use proper size actuator, use larger air supply lines and/or solenoid valve with higher flow |
| Air Leakage | Loose fasteners or worn, damaged seals | Fasteners and travel stop lock nuts | Tighten fasteners, travel stop lock nuts. Replace o-rings. |

## ASSEMBLY

To identify component names and shapes and for the numbers in parentheses ( ) below, refer to the exploded view of the actuator shown on Figure 3, page 12. Easiest assembly will result from lubricating all bearings and seals as they are installed. The lubricant should be a high pressure or extreme pressure petroleum grease with a lithium based thickener which meets the NLGI grade 2. Grease which meets this specification should be available from any automotive supply store.

**Pinion (3)** - Install bearing rings (6 & 7) and o-rings (21 & 22) in their appropriate grooves. Insert the pinion through the large hole in the center bottom of the body (1). With the pinion part of the way into the body, slide the cam (16) over the pinion being careful to align the punch mark on the cam with the punch mark(s) on the pinion. For normal installation and rotation (Fail Close), align the single marks. For Fail Open operation described in Method 2 on page 4, align the single mark on the cam with the two marks on the pinion. For Fail Open operation described in Method 3 on page 4, align the single marks. Next, install the spacer (15) above the cam. Then insert the pinion through the hole at the top of the body and secure it with the washer (9) and retaining ring (8).

**Travel Stop Screws (13)** - Slip the o-ring (14) over the flat end of the screw until it is 5-7 threads from the end. Thread the screw into the hole in the body, flat end first. Repeat these steps for the second screw. Thread the lock nuts (12) onto the screws and tighten the nuts against the body. This will seal the threads for testing. It is not necessary to set the travel stops at this time, as they may have to be reset when the actuator is installed on the valve.

**Pistons (2)** - Install the bearing pad (10) on the back of the rack and the o-ring (19) and guide ring (11) in their appropriate piston grooves. The o-ring goes in the groove nearest the rack. With the ports on the actuator body toward you, turn the pinion so that the slot is approximately 45° to the right of perpendicular with the long side of the body. Grasp the pistons in the spring pockets so that the piston in the right hand has the bearing pad toward you and the piston in the left hand has the bearing pad away from you. Slide the pistons into the body so that they both engage the teeth on the pinion at the same time. Apply enough steady force to compress the o-ring into the body bore. At this point, you may continue pushing or use a wrench on the top of the pinion to pull the pistons into the body.

**NOTICE**

Three important parameters must be verified before assembly may be continued.

The pinion must turn clockwise as the pistons moved toward the center of the body.

The 4 mm slot in the top of the pinion must be within a few degrees of perpendicular to the long side of the body.

The piston faces must both be the same distance from the end of the body.

If all three parameters above have been verified, the end caps may be installed.

If any parameter above is not verified, use a wrench on the pinion to drive the pistons out of the body and repeat the insertion process. It is not necessary to remove the pistons from the body unless the answer to the first question is no. It is only necessary to disengage the piston rack from the pinion.

**NOTICE**

The assembly procedure described here is the standard Fail Close method. For Fail Open actuators, refer to Method 2 or Method 3 on page 4.

**End Caps (4)** - Install the o-ring (20) in the groove. Attach the end cap to the body with the 4 bolts (17) and washers (18) making certain that the straight part of the o-ring groove is toward the bottom of the body. The air pressure will not flow to the outboard side of the pistons if the straight part of the o-ring groove is at the top.

**Position Indicator (23)** - Install the position indicator pointer on the top of the pinion and secure it with the flat head screw (24). Normally, the long axis of the pointer will be parallel to the groove in the pinion. If the actuator is installed across the pipe line, as described in Method 1 on page 4, the indicator should be turned so that it is in line with the butterfly valve disc or port in the ball or plug valve.

## FINAL ASSEMBLY AND TESTING

**CAUTION**

Do not connect a compressed air supply to the actuator that exceeds the pressure rating of the actuator (140 psig / 10 barg)

Connect the compressed air supply to the actuator input ports and cycle the actuator fully open and fully closed to check for proper travel and absence of air leaks. Air supply lines should have a minimum inside diameter of 0.250” (6 mm). Restricted air supply lines, or any portion of the air supply system powering the actuator (such as solenoid air valves or valve manifolds) can reduce actuation time, cause unexpected popping of the valve, or even malfunction.

If compressed air is applied to Port A and the actuator reaches the end of travel, there should be no air flow out of Port B, and vice versa. There should be no air flow between the end caps and the body, through the travel stops, or out the top or the bottom of the pinion. A solution of soap and water applied to the sealing points can indicate leaks that are too small to be audible.

## DISASSEMBLY

**WARNING**

Before disassembly of the actuator, the pneumatic air supply must be completely disconnected from the actuator, and all compressed air stored within the actuator must be released. Auxiliary devices connected to the actuator, such as tubing, ball valves, solenoid air valves, valve positioners, etc. can block the release of air from within the actuator. Do not rely upon the features or controls of any auxiliary device to release the air from inside the actuator to render it safe for disassembly.

**WARNING**

Some actuators may have spring cartridges installed. Before disassembly, all spring cartridges must be placed into the relaxed (fully extended) position. All compressed air must be removed from inside the actuator (See warning on previous page 8) and the actuator pinion must be allowed to rotate so the springs may be relaxed. Care must be taken to verify that any device connected to the actuator, such as a valve mounted underneath, is not preventing the movement of the springs to the relaxed position.

If the actuator is installed on a valve, remove the actuator from the valve, and move the actuator to a clean work area. Remove the indicator pointer. Remove both end caps by loosening the hex head end cap bolts. Remove both pistons by rotating the pinion counter-clockwise until the piston heads are protruding from the body. Pull the pistons out. Using snap-ring pliers, remove the pinion retaining ring and acetal washer, then remove the pinion from the body. The pinion bearings, o-rings, cam and spacer may then be removed.

## ADDING SPRING CARTRIDGES

**WARNING**

Before disassembly of the actuator, the pneumatic air supply must be completely disconnected from the actuator, and all compressed air stored within the actuator must be released. Auxiliary devices connected to the actuator, such as tubing, ball valves, solenoid air valves, valve positioners, etc. can block the release of air from within the actuator. Do not rely upon the features or controls of any auxiliary device to release the air from inside the actuator to render it safe for disassembly.

Move the pinion to the fully closed (0°) position. Remove the end caps and insert the desired number of spring cartridges into the end cap pockets, up to a maximum of six cartridges per end cap.

**NOTICE**

For proper operation, actuators equipped with Spring Cartridges should have the spring cartridges installed in accordance with the positions shown in Figure 2.

Align the end cap with the body so the spring cartridges fit into the piston pockets. Attach the end caps to the body with the hex head end cap bolts. Tighten the bolts gradually in a diagonal sequence.

Proceed to Final Assembly and Testing.

**Figure 2**

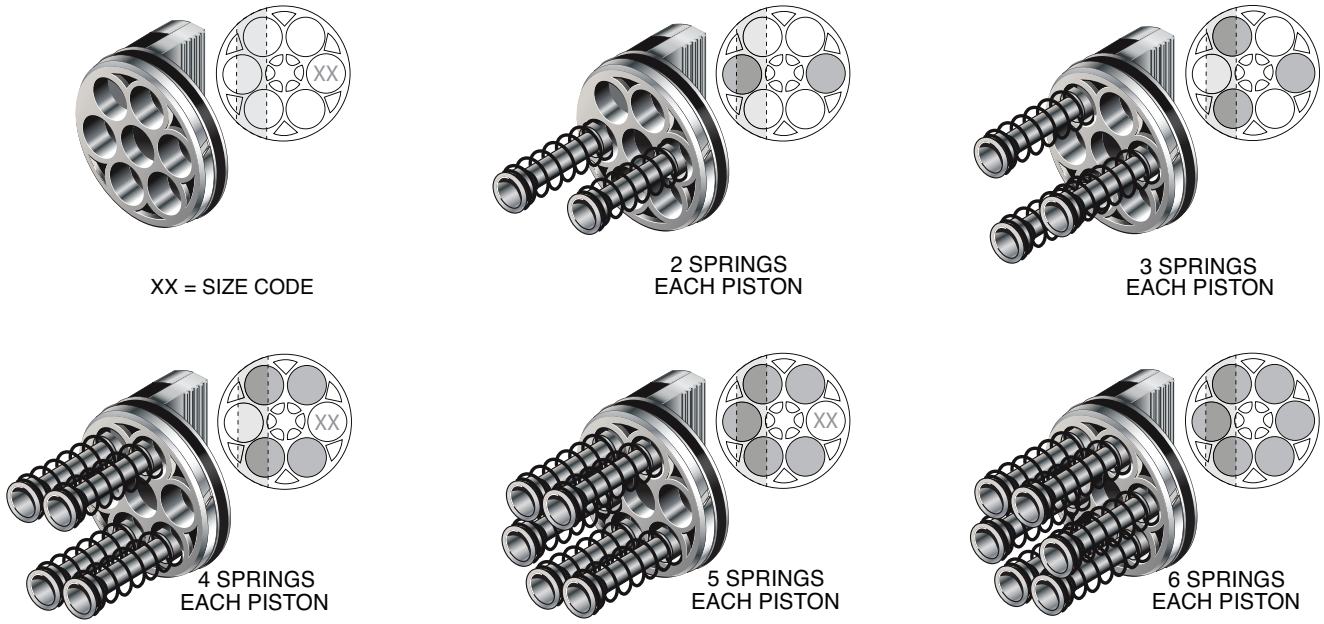

## REMOVING SPRING CARTRIDGES

**WARNING**

Before disassembly of the actuator, the pneumatic air supply must be completely disconnected from the actuator, and all compressed air stored within the actuator must be released. Auxiliary devices connected to the actuator, such as tubing, ball valves, solenoid air valves, valve positioners, etc. can block the release of air from within the actuator. Do not rely upon the features or controls of any auxiliary device to release the air from inside the actuator to render it safe for disassembly.

**CAUTION**

Before disassembly, all spring cartridges must be placed into the relaxed (fully extended) position. All compressed air must be removed from inside the actuator (See warning above) and the actuator pinion must be allowed to rotate so the springs may be relaxed. Care must be taken to verify that any device connected to the actuator, such as a valve mounted underneath, is not preventing the movement of the springs to the relaxed position.

An actuator with spring cartridges installed and no compressed air connected will move to the spring fail position if the pinion is free to rotate. This may be either fully closed (0°) or fully open (90°). In either case, when the spring fail position is reached, remove the end caps by gradually loosening the hex head end cap bolts in a diagonal sequence.

**CAUTION**

When removing end caps from an actuator containing spring cartridges, the end cap bolts must be loosened gradually in a diagonal sequence until the spring cartridges are completely relaxed (fully extended.) The spring cartridges should reach the completely relaxed (fully extended) position while all four end cap bolts still have some thread engagement with the actuator body. Do not remove three end cap bolts completely from the body and expect the remaining single bolt to hold the spring cartridges in a compressed position.

Remove the spring cartridges. Replace the end caps and tighten the end cap bolts gradually in a diagonal sequence.

**CAUTION**

When replacing end caps onto an actuator containing spring cartridges, the end cap bolts must be tightened gradually in a diagonal sequence until the spring cartridges are slightly compressed into their fail position. The spring cartridges should reach the slightly compressed fail position while all four end cap bolts have some thread engagement with the actuator body. Do not attempt to tighten a single end cap bolt fully and compress the spring cartridges while the other three bolts have not been installed.

Proceed to Final Assembly and Testing.

## GENERAL PNEUMATIC SYSTEM RECOMMENDATIONS

To maintain maximum efficiency with the Series 92/93 actuator, as well as many other pneumatic devices, the following suggestions are offered:

- Air supply lines should be run in accordance with a Standard Piping Practice, and should not have exaggerated loops, which may trap condensate.
- All pipe ends should be thoroughly cleaned and deburred after cutting to ensure that the pipeline is clear of cuttings.
- Where air pipelines are subjected to extremes of temperature, the system should be fitted with air drying equipment.
- If pipelines are hydraulically tested, the lines should be "blown down" with high pressure air to clear all water prior to connecting the lines to the actuator.
- Where a system is dependent on air filter equipment, the air filters should be in positions that allow easy access for maintenance and/or draining.
- Where pneumatic valve positioners or pneumatic controllers are installed in a valve actuator assembly, oil mist lubricated air should not be used unless the manufacturer states specifically that the positioner or controller is compatible with lubricated air. In general, lubricated air is not recommended for a positioner.
- Where pipe fitting sealants or tapes are used, they should be applied to the male threads only, and limited to the first three threads. When applied to female threads, excess compound or tape can be transmitted into the actuator control lines and cause malfunctions in downstream equipment.
- Lubricators should be installed downstream of regulators.
- Eliminate or minimize sharp bends in the air supply lines.

## DIMENSIONAL DATA

For Dimensions see Bray ES Drawings:

- ES11A-0460
- ES11A-0533
- ES11A-0534
- ES12A-0533
- ES12A-0534

on www.bray.com

**Figure 3:**
**Series 92/93 Exploded View**

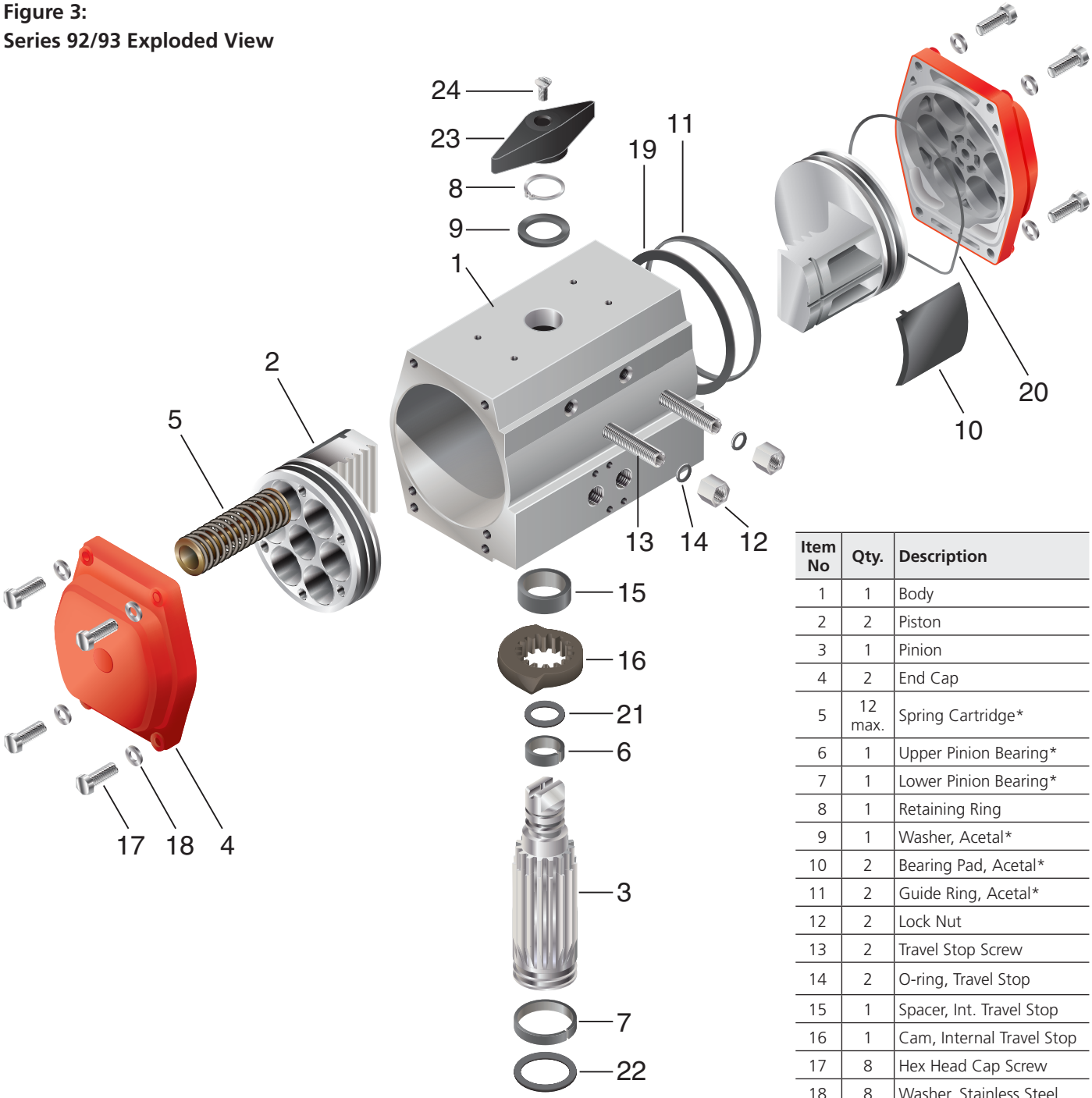


| Item No | Qty. | Description |
|---|---|---|
| 1 | 1 | Body |
| 2 | 2 | Piston |
| 3 | 1 | Pinion |
| 4 | 2 | End Cap |
| 5 | 12 max. | Spring Cartridge* |
| 6 | 1 | Upper Pinion Bearing* |
| 7 | 1 | Lower Pinion Bearing* |
| 8 | 1 | Retaining Ring |
| 9 | 1 | Washer, Acetal* |
| 10 | 2 | Bearing Pad, Acetal* |
| 11 | 2 | Guide Ring, Acetal* |
| 12 | 2 | Lock Nut |
| 13 | 2 | Travel Stop Screw |
| 14 | 2 | O-ring, Travel Stop |
| 15 | 1 | Spacer, Int. Travel Stop |
| 16 | 1 | Cam, Internal Travel Stop |
| 17 | 8 | Hex Head Cap Screw |
| 18 | 8 | Washer, Stainless Steel |
| 19 | 2 | O-ring, Piston |
| 20 | 2 | O-ring, End Cap |
| 21 | 1 | O-ring, Upper Pinion |
| 22 | 1 | O-ring, Lower Pinion |
| 23 | 1 | Position Indicator Pointer* |
| 24 | 1 | Flat Head Screw |

*Extreme temperature trim actuator (-90U) uses proprietary components. Do not install other trim (Low, Standard, High) components. Only install components designed for the designated actuator trim. Contact Bray for service requirements.

All statements, technical information, and recommendations in this bulletin are for general use only. Consult Bray representatives or factory for the specific requirements and material selection for your intended application. The right to change or modify product design or product without prior notice is reserved. Patents issued and applied for worldwide.

Bray® is a registered trademark of Bray International, Inc.
© 2016 Bray International, Inc. All rights reserved.

OM_92/93_07_2016

YOUR GLOBAL FLOW CONTROL PARTNER

**Bray Controls**
A Division of Bray International, Inc.
13333 Westland East Blvd.
Houston, Texas 77041
Tel: 281.894.5454 • www.bray.com

**Design:**
2-way solenoid valve, direct acting, normally closed (circuit function A).

Voltage 12V or 24V
UL / UR valid with
class 2 power supply only

**Seal Materials and Fluids handled:**
See Table.

**Fluid and Ambient Temperature:**
See Table.

**Pressure Range:**
Maximum inlet pressure see label on valve.

**Installation:**
Before installing valve ensure that piping etc. is free of foreign matter (metal fillings, seal materials, welding scale etc.). Installation as required but preferably with coil uppermost. Installation in this position tends to prevent foreign matter remaining in core tube (increased life). Do not put any loads on coil unit.

**Type 0256:** PTFE tape is recommended for sealing ports. Arrow on valve body indicates flow direction. Mounting is accomplished by means of four M4 x 8 mm tapped holes located on the valve underside.

**Marking (example):**

**Body Material**
BR = Brass
SS = Stainless Steel

**Seal Material**
EPDM = EPDM
NBR = NBR
FKM = FKM
EG = PTFE seat and Graphite seal
SA = Steel seat and EPDM O-ring
SF = Steel seat and FKM O-ring

**Circuit function**
A = Normally Closed

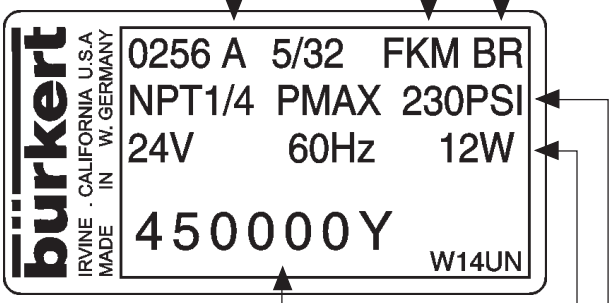


**Recorder No.**

**Voltage / Frequency / Power Consumption**

**Maximum Pressure**

| | | Seal Materials | | Seat/O-ring | | | |
|---|---|---|---|---|---|---|---|
| Fluid | Tempera-tures [°F] | Buna „N‰ | Ethylene Propylene | FKM | Steel Ethylene Propyl. | Steel FKM | |
| Air | Fluid T.<br>Ambient | + 14 to + 194<br>+ 14 to + 130 | - 40 to + 266<br>+ 14 to + 130 | + 14 to + 266<br>+ 14 to + 130 | - 40 to + 356<br>+ 14 to + 130 | + 14 to + 356<br>+ 14 to + 130 | |
| Water | Fluid T.<br>Ambient | + 50 to + 194<br>+ 32 to + 130 | + 50 to + 194<br>+ 32 to + 130 | + 50 to + 194<br>+ 32 to + 130 | + 50 to + 194<br>+ 32 to + 130 | + 50 to + 194<br>+ 32 to + 130 | |
| Neutral Gas | Fluid T.<br>Ambient | + 14 to + 194<br>+ 14 to + 130 | - 40 to + 266<br>+ 14 to + 130 | + 14 to + 266<br>+ 14 to + 130 | - 40 to + 356<br>+ 14 to + 130 | + 14 to + 356<br>+ 14 to + 130 | |
| Light oil | Fluid T.<br>Ambient | + 50 to + 194<br>+ 14 to + 130 | | + 50 to + 194<br>+ 14 to + 130 | | + 50 to + 194<br>+ 14 to + 130 | |
| LP-gas | Fluid T.<br>Ambient | + 14 to + 140<br>+ 14 to + 130 | | + 14 to + 140<br>+ 14 to + 130 | | + 14 to + 140<br>+ 14 to + 130 | |
| Refrigerants | Fluid T.<br>Ambient | | | | | | + 14 to + 194<br>+ 14 to + 130 |

MAN 1000010127 EN Version: I Status: RL (released | freigegeben) printed: 22.09.2017
Operating Instructions 0605/08_EU-EN_00893141

**Wiring Diagram**

**Electrical Connection Type 2509**

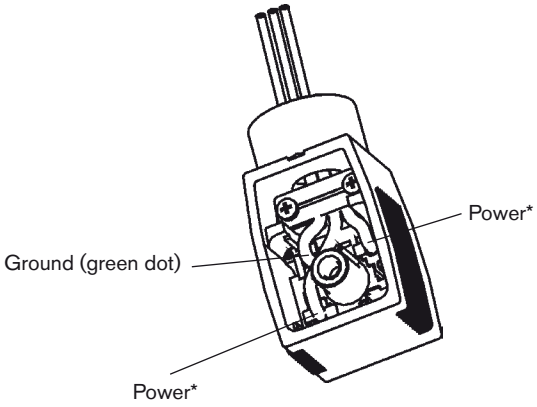


* Orientation is not important

**Electrical Connection:**
Ensure supply voltage/frequency corresponds with that on label.
Voltage tolerance is ± 10 %.
Available Electrical Connections see “Marking”.
Wiring diagram see above.

For this product to be considered UL-listed and CSA approved for General Purpose and FM approved for Hazardous Locations Division 2, it must be in conjunction with the type 2509 cable plug connector (Electrically Operated Valves Parts, YSYI2).
The connector and gasket must be assembled to the valve with the screw provided after the connection of the wire leads. This valve and connector assembly is delivered together and is to be used as one unit.

For valves to be used in Intrinsically Safe Applications the positive pole is identified by a “+” on the pin or wire No. 1 has to be connected to the “+”.
See Control Drawing for the Rules of Interconnection.

**Warning:**
All valves to be used in Intrinsically Safe Applications must be clearly marked as Intrinsically Safe Apparatus.

**Trouble-Shooting:**
Check port connections, minimum operating pressure differential if required and supply voltage. Ensure pilot hole in piston is clear and pilot bore in the valve outlet is not abstracted. If core does not pull in, check for short circuit, coil burn-out or foreign matter impeding core movement. A jammed or missing core causes the coil to overheat in the case of AC supply.

**Warning:**
These products are designed to operate in a wide variety of applications, it is the user’s responsibility to select a model that is appropriate for the application. This product is designed to be installed only by suitably qualified and trained personnel. Specifications should not be exceeded under any circumstances.

The torque for the terminal screw on type 2509 is 0,5 Nm (4,4 lbf-in.).

Changes made to this product will render any applicable warranty null and avoid.

Specifications subject to change without notice.

Any questions? Please call Bürkert Contromatic Technical Service at (949) 223 31 00.

MAN 1000010127 EN Version: I Status: RL (released | freigegeben) printed: 22.09.2017

bürkert

**Germany**
Contact address:
Bürkert Fluid Control Systems
Sales Center
Chr.-Bürkert-Str. 13-17
D-74653 Ingelfingen
Tel. + 49 (0) 7940 - 10 91 111
Fax + 49 (0) 7940 - 10 91 448
E-mail: info@de.buerkert.com

**International**
Contact addresses can be found on the Internet at:

www.burkert.com ➔ Bürkert ➔ Company ➔ Locations

bürkert
FLUID CONTROL SYSTEMS

# 2/2–way Solenoid Valve

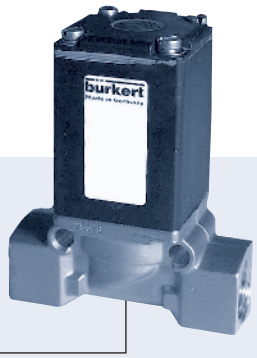

- Seat valve, direct–acting
- Wide range of applications
- Port connection size up to NPT 1/2
- Brass or stainless steel valve body
- Approvals:

Type 0256 can be combined with…

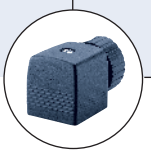

**Type 2508**
Cable plug

**Type 1078**
Timer unit

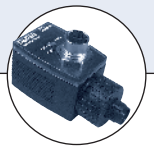

**Type 2511**
ASI cable plug

**Type 8600**
Dosing control

This direct-acting plunger solenoid valve Type 0256 can be used in many ways. It is delivered with brass or stainless steel bodies for a wide range of orifices and connections.

| Power consumption | | | |
|---|---|---|---|
| **Orifice** | **Inrush** | **Hold** | |
| [mm] | AC [VA] | AC [VA/W] | DC [W] |
| 3.0-12.0 | 35-40 | 16/10 | approx. 12 |

**Circuit function A**

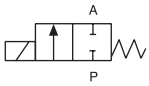


2/2-way valve, normally closed by spring force

| Technical data | |
|---|---|
| **Orifice** | 5/64" – 7/16" (DN 2.0 – 12.0 mm) |
| **Body materials** | Brass (Body C with stainless steel seat 1.4112) or stainless steel 1.4581 |
| **Seal material** | FKM, EPDM, (steel on request) |
| **Media**<br>FKM<br>EPDM<br>All materials | <br>Neutral media, compressed lubricated air, water, oil, oils with additives, oxygen<br>Oil, fat-free fluids e.g., hot water, alkaline washing, bleaching lyles<br>Technical vacuum |
| **Media temperature**<br>FKM<br>EDPM | <br>14°F to 266°F (-10°C to +130°C)<br>-40°F to 266°F (-40°C to +130°C) |
| **Ambient temperature** | Max. 131°F (+55°C) |
| **Viscosity** | Max. 21 cst |
| **Voltage tolerance** | ±10% |
| **Duty cycle** | 100% continuous rating |
| **Electrical connection** | Cable plug for Ø 7 mm cable (sold seperately) |
| **Protection class** | IP 65 with cable plug |
| **Installation** | As required, preferably with actuator upright |

| | |
|---|---|
| **Flow rate**<br>$C_V$ value water [gpm] | measured at 68°F (+20°C), 1 PSI pressure at valve inlet and free outlet |
| **Pressure valves [PSI]** | gauge pressures with respect to the prevailing atmosphere pressure |
| **Response times [ms]**<br>Opening<br>Closing | measured with water at valve outlet at 87 PSI and 68°F (+20°C)<br>pressure build-up 0 to 90%<br>pressure decay 100 to 10% |

DTS 1000082394 EN Version: A Status: RL (released | freigegeben | validé) printed: 22.09.2017

bürkert

## Solenoid valve specifications

| Orifice DN [mm] | $C_V$ Value Water [gpm] | QNn Value Air [SCPM] | Pressure Range AC Liquids [PSI] | Pressure Range AC Gases [PSI] | DC Liquids and Gases [PSI] | Weight [kg] |
|---|---|---|---|---|---|---|
| 2 | 0.14 | 4.6 | 0 - 580.0 | 0 - 580.0 | 0 - 435.0 | 0.60 |
| 3 | 0.29 | 9.5 | 0 - 319.0 | 0 - 319.0 | 0 - 145.0 | 0.60 |
| 4 | 0.58 | 19.0 | 0 - 174.0 | 0 - 232.0 | 0 - 87.0 | 0.60 |
| 5 | 0.76 | 25.0 | 0 - 87.0 | 0 - 174.0 | 0 - 36.0 | 0.60 |
| 6 | 0.93 | 30.0 | 0 - 56.0 | 0 - 116.0 | 0 - 14.5 | 0.60 |
| 8 | 1.05 | 34.0 | 0 - 22.0 | 0 - 36.0 | 0 - 7.2 | 0.60 |
| 10 | 1.75 | 56.0 | 0 - 14.5 | 0 - 22.0 | 0 - 5.8 | 0.60 |
| 12 | 2.10 | 68.0 | 0 - 7.2 | 0 - 14.5 | 0 - 1.5 | 0.60 |

NOTE: Valves labeled with pressure range for liquids

## Dimensions [mm]

| Body | Body material | Connection D | H | SW |
|---|---|---|---|---|
| A | Brass, stainless steel body without bore hole mounting | NPT 1/2 | 95.5 | 27 |
| B | Brass body with bore hole mounting | NPT 1/4, NPT 3/8 | 93.0 | 22 |
| B | Stainless steel body without bore hole mounting | NPT 1/4 | 93.0 | 22 |
| C | Brass body with bore hole mounting | NPT 1/4, NPT 3/8 | 92.0 | 22 |

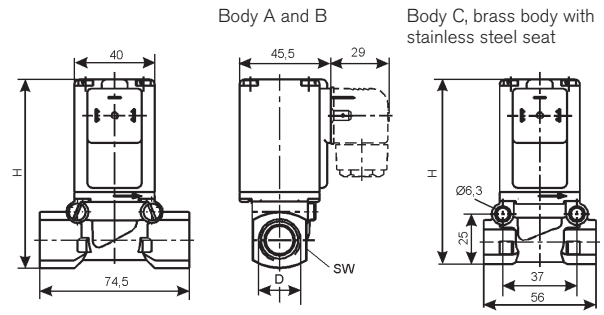


## Mounting set

**Mounting set**

- 2 M6 x 35 cheesehead screws
- 1 mounting bracket

Valve mounted using mounting kit
Refer to the dimensional drawings for the valve
37 mm separation between the M6 threaded holes 48 mm separation between the Ø7 bores

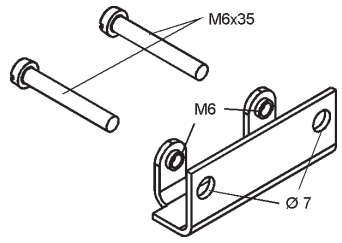


Item no. 151 287

## 2509 Dimensions

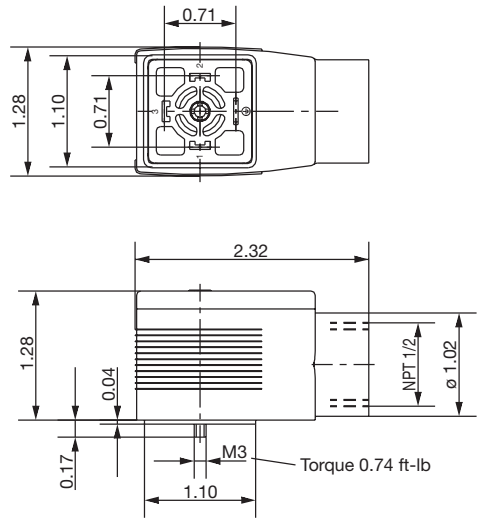


**without circuitry**

* Included on all UL listed valves

DTS 1000082394 EN Version: A Status: RL (released | freigegeben | validé) printed: 22.09.2017

bürkert

## Ordering chart for valves (other versions on request)

Valves A, B, C with brass body, DN 2.0 to 12.0 mm, with cable plug, without mounting bracket (see Accessories)
Body C with stainless steel seat 1.4112

| Circuit function | Orifice DN [mm] | Flow Rate: Water $C_V$ valve [gpm] | Flow Rate: Air[1] QNn [SCFM] | Port connection [NPT] | Pressure range[2] [PSI] ⚠ | Body material/ style | Seal material | Approval[3] | Voltage/ frequency [V/Hz] | Mounting bracket | Item no. |
|---|---|---|---|---|---|---|---|---|---|---|---|
| **A** 2/2-way valve NC 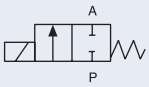 | 2.0 | .14 | 4.6 | 1/4 | 0 - 435 | Brass/B | FKM | - | 12/DC | N | 453 471 Y |
| | | | | | 0 - 580 | Stainless/B | FKM | UR/CSA | 120/60 | N | 450 047 B |
| | | | | | 0 - 580 | Stainless/B | FKM | FM/UL/CSA | 120/60 | N | US00735 |
| | 3.0 | .29 | 9.5 | 1/4 | 0 - 319 | Brass/C | FKM | UR/CSA | 120/60 | N | 450 048 L |
| | | | | | 0 - 319 | Brass/C | FKM | FM/UL/CSA | 120/60 | N | 452 814 P |
| | 4.0 | .58 | 19.0 | 1/4 | 0 - 87 | Brass/C | FKM | - | 24/DC | N | 450 588 F |
| | | | | | 0 - 87 | Brass/C | FKM | UR/CSA | 24/DC | N | 454 519 Z |
| | | | | | 0 - 87 | Brass/C | FKM | FM/UL/CSA | 24/DC | N | US03974 |
| | | | | | 0 - 232 | Brass/C | FKM | UR/CSA | 120/60 | N | 450 050 J |
| | | | | | 0 - 232 | Brass/C | FKM | FM/UL/CSA | 120/60 | Y | 452 820 Z |
| | | | | | 0 - 87 | Stainless/B | FKM | UR/CSA | 24/DC | N | 452 466 S |
| | | | | | 0 - 87 | Stainless/B | FKM | FM/UL/CSA | 24/DC | N | 452 915 L |
| | | | | | 0 - 232 | Stainless/B | FKM | UR/CSA | 120/60 | N | 450 052 G |
| | | | | | 0 - 232 | Stainless/B | FKM | FM/UL/CSA | 120/60 | N | 452 918 X |
| | | | | 3/8 | 0 - 87 | Brass/C | FKM | - | 24/DC | N | 454 032 L |
| | | | | | 0 - 232 | Brass/C | FKM | UR/CSA | 120/60 | N | 450 051 F |
| | | | | | 0 - 232 | Brass/C | FKM | FM/UL/CSA | 120/60 | Y | 451 923 K |
| | 5.0 | .76 | 25.0 | 1/4 | 0 - 174 | Brass/C | FKM | - | 24/60 | N | 450 883 X |
| | | | | 3/8 | 0 - 174 | Brass/C | FKM | UR/CSA | 120/60 | N | 450 054 A |
| | 6.0 | .93 | 30.0 | 1/4 | 0 - 116 | Stainless/B | EPDM | UR/CSA | 120/60 | N | 455 295 S |
| | | | | | 0 - 116 | Stainless/B | EPDM | UR/CSA | 240/60 | N | 455 294 Z |
| | | | | | 0 - 29 | Brass/B | FKM | - | 12/DC | N | 450 618 L |
| | | | | | 0 - 116 | Brass/C | FKM | UR/CSA | 24/60 | N | 450 057 D |
| | | | | | 0 - 29 | Brass/C | FKM | UR/CSA | 24/DC | N | 454 522 L |
| | | | | | 0 - 116 | Brass/C | FKM | UR/CSA | 120/60 | N | 450 058 N |
| | | | | | 0 - 116 | Brass/C | FKM | FM/UL/CSA | 120/60 | N | 454 407 S |
| | | | | | 0 - 116 | Brass/B | FKM | UR/CSA | 120/60 | N | 452 471 X |
| | | | | | 0 - 116 | Brass/B | FKM | FM/UL/CSA | 120/60 | N | 453 010 Z |
| | | | | | 0 - 116 | Brass/B | FKM | UR/CSA | 120/60 | Y | US06479 |
| | | | | | 0 - 116 | Stainless/B | FKM | UR/CSA | 24/60 | N | 458 125 S |
| | | | | | 0 - 29 | Stainless/B | FKM | UR/CSA | 24/DC | N | 452 481 J |
| | | | | | 0 - 29 | Stainless/B | FKM | FM/UL/CSA | 24/DC | N | US02633 |
| | | | | | 0 - 116 | Stainless/B | FKM | UR/CSA | 120/60 | N | 450 061 H |
| | | | | | 0 - 116 | Stainless/B | FKM | FM/UL/CSA | 120/60 | N | 452 933 N |
| | | | | 3/8 | 0 - 29 | Brass/B | FKM | UR/CSA | 24/DC | N | 452 473 Z |
| | | | | | 0 - 116 | Brass/C | FKM | UR/CSA | 120/60 | N | 450 059 P |
| | | | | | 0 - 116 | Brass/B | FKM | UR/CSA | 120/60 | N | 450 766 Q |

1) Measured with 85 upstream pressure and 14.5 PSI pressure drop across the valve at 68°F.
2) Also applies for technical vauum.
3) UL listed for safety shutoff.
FM approved Class I, II, III Division 2 Groups A, B, C, D, F, G.
CSA approved for safety shutoff.
All valves carry CE approval.
⚠ Limited pressure range for liquids (see chart on page 2)

DTS 1000082394 EN Version: A Status: RL (released | freigegeben | validé) printed: 22.09.2017

bürkert

## Ordering chart for valves (other versions on request)

Valves A, B, C with brass body, DN 2.0 to 12.0 mm, with cable plug, without mounting bracket (see Accessories)
Body C with stainless steel seat 1.4112

| Circuit function | Orifice DN [mm] | Flow Rate: Water $C_V$ valve [gpm] | Flow Rate: Air[1] QNn [SCFM] | Port connection [NPT] | Pressure range[2] [PSI] ⚠ | Body material/ style | Seal material | Approval[3] | Voltage/ frequency [V/Hz] | Mounting bracket | Item no. |
|---|---|---|---|---|---|---|---|---|---|---|---|
| **A** 2/2-way valve NC 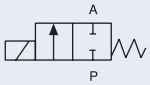 | 6.0 | .93 | 30.0 | 3/8 | 0 - 116 | Brass/B | FKM | FM/UL/CSA | 120/60 | Y | 453 012 P |
| | | | | 1/2 | 0 - 29 | Stainless/A | EPDM | - | 24/DC | N | 453 327 X |
| | | | | | 0 - 116 | Stainless/A | EPDM | UR/CSA | 120/60 | N | 455 296 T |
| | | | | | 0 - 116 | Stainless/A | EPDM | UR/CSA | 240/60 | N | 455 018 X |
| | | | | | 0 - 116 | Brass/A | FKM | UR/CSA | 24/60 | N | 452 476 U |
| | | | | | 0 - 116 | Brass/A | FKM | FM/UL/CSA | 24/60 | N | 452 927 Q |
| | | | | | 0 - 29 | Brass/A | FKM | UR/CSA | 24/DC | N | 450 055 B |
| | | | | | 0 - 29 | Brass/A | FKM | FM/UL/CSA | 24/DC | N | 452 926 P |
| | | | | | 0 - 116 | Brass/A | FKM | UR/CSA | 120/60 | N | 450 056 C |
| | | | | | 0 - 116 | Brass/A | FKM | FM/UL/CSA | 120/60 | N | 453 013 Q |
| | | | | | 0 - 116 | Brass/A | FKM | - | 240/60 | N | 456 131 N |
| | | | | | 0 - 116 | Brass/A | FKM | FM/UL/CSA | 240/60 | N | 452 928 Z |
| | | | | | 0 - 29 | Stainless/A | FKM | UR/CSA | 24/DC | N | 452 478 E |
| | | | | | 0 - 29 | Stainless/A | FKM | FM/UL/CSA | 24/DC | N | US05391 |
| | | | | | 0 - 116 | Stainless/A | FKM | UR/CSA | 120/60 | N | 450 060 L |
| | | | | | 0 - 116 | Stainless/A | FKM | FM/UL/CSA | 120/60 | N | 452 809 B |
| | | | | | 0 - 116 | Stainless/A | FKM | UR/CSA | 120/60 | Y | US06295 |
| | | | | | 0 - 116 | Stainless/A | FKM | UR/CSA | 240/60 | N | 452 480 V |
| | 8.0 | 1.05 | 34.0 | 1/2 | 0 - 36 | Brass/A | FKM | FM/UL/CSA | 120/60 | N | 452 937 J |
| | | | | | 0 - 7.2 | Stainless/A | FKM | FM/UL/CSA | 24/DC | N | 456 477 Z |
| | | | | | 0 - 36 | Stainless/A | FKM | UR/CSA | 120/60 | N | 450 064 C |
| | | | | | 0 - 36 | Stainless/A | FKM | FM/UL/CSA | 120/60 | N | 452 941 W |
| | | | | | 0 - 36 | Stainless/A | FKM | FM/UL/CSA | 240/60 | N | 452 942 X |
| | 10 | 1.75 | 56.0 | 3/8 | 0 - 5.8 | Brass/B | FKM | UR/CSA | 24/DC | N | 452 490 X |
| | | | | | 0 - 22 | Brass/B | FKM | UR/CSA | 120/60 | N | 450 066 E |
| | | | | | 0 - 22 | Brass/B | FKM | FM/UL/CSA | 120/60 | N | 452 945 S |
| | | | | | 0 - 22 | Brass/B | FKM | UR/CSA | 240/60 | N | 452 492 M |
| | | | | | 0 - 22 | Brass/B | FKM | FM/UL/CSA | 240/60 | N | US01308 |
| | | | | 1/2 | 0 - 22 | Brass/A | FKM | UR/CSA | 120/60 | N | 450 065 D |
| | | | | | 0 - 22 | Brass/A | FKM | FM/UL/CSA | 120/60 | Y | 452 949 E |
| | | | | | 0 - 5.8 | Stainless/A | FKM | UR/CSA | 24/DC | N | 452 496 R |
| | | | | | 0 - 5.8 | Stainless/A | FKM | FM/UL/CSA | 24/DC | N | 455 102 Z |
| | | | | | 0 - 22 | Stainless/A | FKM | UR/CSA | 120/60 | N | 450 067 F |
| | | | | | 0 - 22 | Stainless/A | FKM | FM/UL/CSA | 120/60 | N | 455 054 T |
| | 12 | 2.10 | 68.0 | 1/2 | 0 - 1.4 | Brass/A | FKM | - | 12/DC | N | 454 525 P |
| | | | | | 0 - 14.5 | Brass/A | FKM | UR/CSA | 120/60 | N | 452 499 U |
| | | | | | 0 - 14.5 | Brass/A | FKM | FM/UL/CSA | 120/60 | N | 452 957 W |
| | | | | | 0 - 1.4 | Stainless/A | FKM | - | 24/DC | N | 451 974 W |
| | | | | | 0 - 14.5 | Stainless/A | FKM | - | 120/60 | N | 454 770 Q |
| | | | | | 0 - 14.5 | Stainless/A | FKM | FM/UL/CSA | 120/60 | N | US01049 |

1) Measured with 85 upstream pressure and 14.5 PSI pressure drop across the valve at 68°F.
2) Also applies for technical vauum.
3) UL listed for safety shutoff. FM approved Class I, II, III Division 2 Groups A, B, C, D, F, G. CSA approved for safety shutoff. All valves carry CE approval.
⚠ Limited pressure range for liquids (see chart on page 2)


We reserve the right to make technical changes without notice.
© Christian Bürkert GmbH & Co. KG


DTS 1000082394 EN Version: A Status: RL (released | freigegeben | validé) printed: 22.09.2017

Ritepro Corporation

A SUBSIDIARY OF / UNE FILIALE DE BRAY INTERNATIONAL INC.

# *INSTALLATION AND MAINTENANCE MANUAL*

# *FOR*

# *CHECK RITE WAFER TYPE SWING CHECK VALVES*

## *MI-200*

## *SIZES 1" - 60"*

## *ANSI SERIES: 125 - 2500*

## *MODELS 201, 202, 203, 205, 210, 211, 212, 260*

***Rev. B***

Ritepro Corporation, 12200 Albert Hudon, Montreal, Quebec, Canada, H1G 3K7
Tel: (514) 324-8900 ● Fax: (514) 324-9525
Web Site: www.ritepro.com ● Email:sales@ritepro.com

## *Table of Contents*

***Subject*** ***Page***

1.0 Introduction to Check Rite Wafer Type Swing Check Valves . . . . . 2

2.0 Description of Check Rite Valves . . . . . 2

3.0 Dis-Assembly and Assembly Instructions for Check Rite Wafer Type Swing Check Valves . . . . . 4

4.0 Installation Instructions . . . . . 6

5.0 Maintenance Requirements and Information . . . . . 7

6.0 Check Rite and Spool Installation . . . . . 8

7.0 Nameplates . . . . . 8
Serial Number . . . . . 8
Figure Number . . . . . 8

8.0 Safety Warnings . . . . . 9

9.0 Non Shock Pressure -Temperature Ratings . . . . . 10
Cast Iron (ASTM A126-CLB) . . . . . 10
Ductile Iron (ASTM A395) . . . . . 10
Carbon Steel (ASTM A216-WCB) . . . . . 10
Stainless Steel (ASTM A351-CF8M) . . . . . 11

Illustrations

2" - 12" Series 125/150/300 Model 210 . . . . . 12

14" - 42" Series 125/150 Model 210 . . . . . 13

Stud Dimensions E-8 ANSI Series 125 - 1500 . . . . . 14

Spool Dimensions E-9 ANSI Series 125 / 150 / 300 . . . . . 15

**Note:**
**This is a generic instruction manual common to most Ritepro standard check valves. Please refer to the certified assembly drawing supplied with your order, for any dimensional and / or operational parameters may not appear in this publication.**

## *1.0 Introduction to Check Rite Wafer Type Swing Check Valves*

Modern piping applications demand better features, performance and economy in a check valve.

***Features:***

- Simplicity
- Compactness
- Minimum Weight

***Performance Characteristics:***

- Silent operation
- Non Slamming
- Rapid Response
- Low Pressure Drop
- Bubble Tight Shut-Off

A combination of these features and performance characteristics ensure long service life as characterized by Check Rite.

## *2.0 Description of Check Rite Valves.*

Check Rite valves consist of a compact Body (1) with a single plate Disc (12) attached to a Hinge (2) which in turn is supported by a Hinge Pin (7) inside an off-center body cavity.

The Disc is mechanically biased to the closed position by a torsional Spring (5) located between the two hinge lugs. The Hinge Pin (7) is retained by two NPT Pipe Plugs (8) inside the Body (1). The Seat (3) can be:

- Metal to Metal
- Metal to Buna, Viton or Teflon

An Eyebolt (10) located on the top of the Check Rite valve aids for easy installation.

The Nameplate (11) located on the top pad specifies:

- Size
- Serial Number
- Figure Number (Pressure Class and Materials)
- Ritepro Corporation

Check Rite valves are designed to open when a pressure of less than 1 psi (.07 bar) is applied across the face of the Disc (12).

Check Rite valves are provided for installation inside the bolt circle and between standard flanges, using a suitable gasket for the application, or as specified.

Check Rite valves are normally installed with the Eyebolt pointing vertically upwards in a horizontal run of pipe, with the arrow on the Body pointing in the direction of flow.

> For vertical pipe run applications, the flow direction is the only orientation required in a straight length of pipe.

All Check Rite valves are hydrostatically tested in accordance with MSS-SP-61 test procedures and zero leakage criteria.

In addition a "Zero Head Leakage" test is performed, where the Check Rite valves are placed in a horizontal position (see sketch) with the flow direction pointing vertically upwards.

An internal hydrostatic pressure equivalent to the head of water which can be retained within the downstream portion of the valve body is applied. During this one hour test, no leakage is allowed.

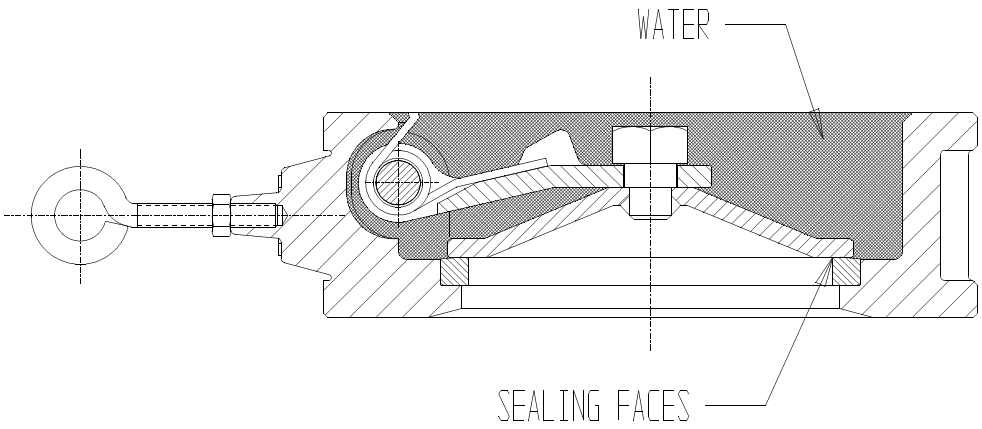


Check Rite valves are manufactured to high quality levels as specified in the applicable standards such as ANSI, MSS, API and CSA.

Check Rite valves in sizes 14" to 42" in classes 125 to 300 and all sizes in the higher pressure classes have a different Hinge-Disc connection which is illustrated on the applicable Specification Sheets.

The standard connection for small valves 2" to 12" classes 125 to 300 is a welded assembly, by means of a Shoulder Pin (4) passing through the Hinge (2) and Seal-welded to the Disc (12). In the larger sizes and higher pressure classes, the Disc (12) is assembled to the Hinge (2) with a Nut (15) and secured by welding.

A heavy duty Hinge (2) is available for valves sizes 2" to 24" in which the Disc (12) is attached to the Hinge (2) with a Nut (15) and a weld is used to secure the components. This is the Model 260 valve. All other dimensions, maintenance procedures, and O-Ring sizes apply as stated in this manual.

## *3.0 Dis-Assembly and Assembly Instructions for Check Rite Wafer Type Swing* Check Valves

The simple design of the Check Rite valve permits for easy assembly and disassembly.

The following assembly procedure applies to all Check Rite valves.

To Dis-assemble the valve:

a) Place the Body (1) in a horizontal position with the disc assembly showing.
b) Remove the Plugs (8) on either side of the Body (1).
c) Hold the Spring (5) in position and slide the Pin (7) out of the Body (1).
d) Slowly release the pressure on the Spring (5) and remove it from the valve.
e) The Hinge-Disc Assembly can now be lifted from the Body (and disassembled, if required, on large sizes).
f) Remove the Spacers (6).
g) Remove the O-Ring (14) if required.

To re-assemble the valve:

a) Clean all parts with Varsol or other acceptable solvent.
b) Place the Body (1) in a horizontal position with the seating face pointing upwards.
c) If required, insert O-Ring (14) in the seat groove. (See next page for installation instructions).
d) Place the Hinge-Disc Assembly (2,12) in the body cavity.
e) Insert the Pin (7) through the plug hole on either side of the Body and slide a Spacer (6) in between the Body (1) and adjacent hinge lug.
f) Press Torsion Spring (5) between the hinge lugs and body cavity, then advance the Pin (7) through the Spring (5) and the second hinge lug.
g) Slide the second Spacer (6) between the Body and hinge lug and advance the Pin (7) into the Body (1).

   Position the Hinge Pin (7) central to the valve body prior to the installation of the retaining Plugs (8).

h) Check that the torsion spring ends are seated properly.
i) Apply Teflon tape or sealing compound on retaining Plugs (8), install Plugs and tighten both sides with an Allen key.

j) **Check:**

   aa) that the valve opens and closes freely.

   bb) that adequate freedom of movement of the Shoulder Pin-Disc connection is provided for the disc to adapt a self-aligning position with the seat.

***IMPORTANT-INSERT O-RING AS FOLLOWS***

aa) Place O-Ring (14) on top of seat groove.

bb) To prevent looping, insert the O-Ring as shown by pressing the O-Ring into the groove in the following numerical sequence.

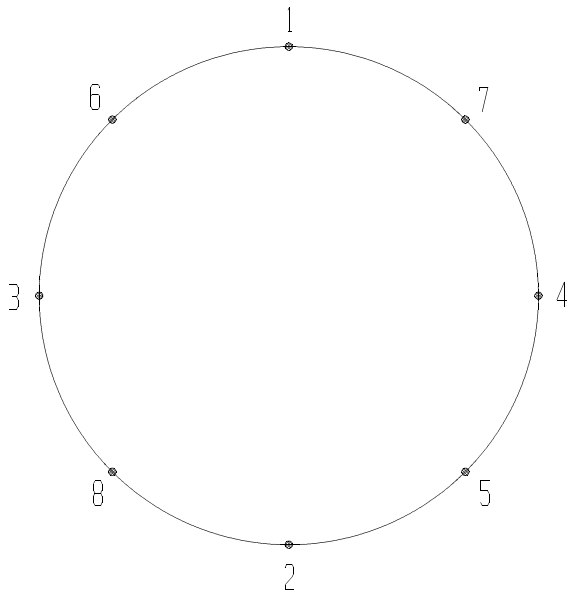


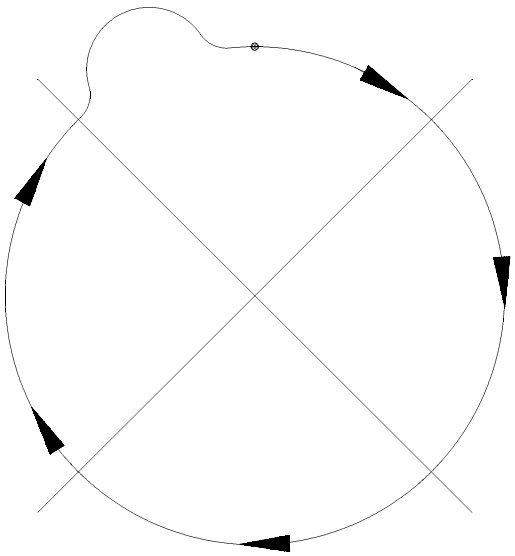

Right Wrong

cc) Having engaged the O-Ring in the groove according to the above illustration, proceed to smooth out the O-Ring using thumb pressure.

It is important to smooth out the O-Ring so that there are no visible ripples or loops.

It should be noted that the O-Ring groove is slightly larger than the O-Ring and it follows that the O-Ring must be hoop stretched to engage the groove.

## *4.0 Installation Instructions*

The stud selection sheet (Specification Sheet E-8) shows the ease with which Check Rite valves are installed.

The valve is inserted between two companion flanges with gaskets on the contact faces. Studs are installed, which will span the valve, and tightened in the same manner as any flange connection.

The Check Rite valve outside diameter is designed to locate the valve in the same centerline as the companion flanges when mounted inside the studs.

The normal installation of a Check Rite valve is for horizontal flow with the hinge pin (7) in the horizontal upper position, or for vertical flow, with the flow direction upwards.

When removing a Check Rite valve from the line, only one half of the studs need to be removed and the others loosened.

***IMPORTANT:***

1) Check the flow arrow on the body before inserting the Check Rite valve between the flanges.

2) Pipeline flanges must be parallel and have the same pressure class rating as the valve.

3) There must be no obstructions in the flange or pipe bore as this would prevent the valve from opening fully.

   If slip-on flanges are used, make sure that no weld projects into the pipe bore.

## *5.0 Maintenance Requirements and Information*

No periodical maintenance work is required for Check Rite valves. For replacement of O-Rings refer to Section 3.0, "Assembly and Dis-assembly of Check Rite Valves".

The standard O-Ring numbers, Plug sizes and Allen key sizes for class 125/150/300 are listed below for valves 2"-42". For other classes, contact the factory.

| *Valve Size* | *O-Ring Size Models 210* | *O-Ring Size Models 212* | *Plug Size NPT* | *Allen Key Size* |
|---|---|---|---|---|
| ***2"*** | 128 | 128 | 1/4" | 1/4" |
| ***2.5"*** | 133 | 133 | 1/4" | 1/4" |
| ***3"*** | 141 | 141 | 3/8" | 5/16" |
| ***4"*** | 235 | 235 | 3/8" | 5/16" |
| ***5"*** | 242 | 242 | 3/8" | 5/16" |
| ***6"*** | 248 | 248 | 3/8" | 5/16" |
| ***8"*** | 259 | 259 | 1/2" | 3/8" |
| ***10"*** | 368 | 368 | 1/2" | 3/8" |
| ***12"*** | 447 | 447 | 3/4" | 9/16" |
| ***14"*** | 449 | | 3/4" | 9/16" |
| ***16"*** | 453 | | 3/4" | 9/16" |
| ***18"*** | 455 | | 3/4" | 9/16" |
| ***20"*** | 458 | | 1" | 5/8" |
| ***24"*** | 462 | | 1" | 5/8" |
| ***30"*** | 471 | | 1 1/2" * | 1 1/4" * |
| ***36"*** | 473 | | 1 1/2" * | 1 1/4" * |
| ***42"*** | 3/8 x110" | | 2" * | 1 5/16" * |

* Square Head Plug

## *6.0 Check Rite and Spool Installation*

As shown on Specification Sheet E-9, when a standard flanged valve is replaced with a wafer valve, a spool piece can be inserted with the Check Rite valve to obtain the required face to face dimension.

The installation instructions in Section 4.0 above apply.

## *7.0 Nameplates*

### *Serial Number*

The serial number gives the style of the valve internals and the date of manufacture of the valve.

The valve internals are based on either model 210 or 212. The first two digits of the serial number give the model.

| | |
|---|---|
| 82 | Model 210 |
| 88 | Model 212 |

For standard valves, the date of assembly is included in the Serial Number stamped on the nameplate attached to the valve. The last four digits of the serial number are the month and year of manufacture.

For UL/FM valves, the serial number is specified by UL and can be any numeric value. These valves are identified by the red paint and a special nameplate is used which includes the UL and FM logos. These valves are always based on Model 212.

A unique serial number is given to all special valves (not UL/FM). For special valves (including UL/FM) the month and year of manufacture are either stamped on the nameplate or on the exterior diameter of the flange, depending on valve size.

### *Figure Number*

The figure number consists of at least five alphanumeric characters. The first two give the class of the valve. The next three give the principle materials of construction.

If the valve has a special model number, ie Model 260, this is stamped at the end of the code or if space prohibits this, then either underneath the code or on the outside diameter of the flange. The table on the following page explains the codes used.

UL/FM valves have either 212 or 312 for a figure number. The materials of construction are always cast iron body, buna seat, stainless internals and Teflon spacer. The applicable specification sheet gives more detailed information.

| ***Valve Class*** | 125 | 150 | 300 | 600 | 900 | 1500 |
|---|---|---|---|---|---|---|
| ***Code*** | 12 | 15 | 30 | 60 | 90 | 150 |

| ***Body Material*** | Cast Iron | Ductile Iron | Steel | Stainless Steel |
|---|---|---|---|---|
| ***Code*** | C | D | S | X |

| ***Seat Material*** | Buna N | EPDM | Stainless Steel | Viton |
|---|---|---|---|---|
| ***Code*** | B | E | M | V |

| ***Spacer Material*** | Teflon | Bronze | Stainless Steel |
|---|---|---|---|
| ***Code*** | T | Y | Z |

For example a class 150 check valve with a ductile iron body, stainless steel seat and Teflon spacers would be stamped: **15DMT**

## *8.0 Safety Warnings*

1. The valve must be installed in the correct line size between flanges of the correct class.
2. The valve materials of construction must be compatible with the fluids being handled.
3. Pressures and temperatures must be kept within the limits specified by the appropriate ANSI standard, ie: B16.1, B16.34, B16.42, or within the limits specified by the particular design. These values are given on the following pages.
4. An arrow on the body indicates the direction of flow through the valve. The valve must be installed with the arrow pointing in the correct direction.
5. For flow in the horizontal direction, the valve shall be installed with the Pin in the horizontal upper position with the eye bolt pointing vertically upwards.
6. The valve must be installed in the correct location in the pipeline. The disc must not open into or against other piping components such as valves, elbows, or tees. For the best performance and life of the valve, a minimum of 10 pipe diameters of straight pipe upstream and downstream of the valve is suggested. Any reduction in this length upstream of the valve reduces the life of the valve proportionally.
7. Plugs must not be removed from the valve while the pipeline is under pressure.
8. Flow rates must be within acceptable limits. Too high a rate may cause extreme pressure drops and erosion of the components. Too low a flow may cause the disc assembly to oscillate and cause wear which may lead to premature failure of the internals.
9. Care should be taken in handling the valve. Mishandling may lead to damage of the sealing components or damage to the externals.

## *9.0 Non Shock Pressure -Temperature Ratings*

All temperatures in °F and pressures in psi.

**Cast Iron** (ASTM A126-CLB) Ratings from ANSI B16.1.
Class 125

| | ***Temperature*** | | | | | | | | | | | |
|---|---|---|---|---|---|---|---|---|---|---|---|---|
| ***Size*** | **-20 to 150** | **200** | **225** | **250** | **275** | **300** | **325** | **353** | **375** | **406** | **425** | **450** |
| **1"-12"** | 200 | 190 | 180 | 175 | 170 | 165 | 155 | 150 | 145 | 140 | 130 | 125 |
| **14"-24"** | 150 | 135 | 130 | 125 | 120 | 110 | 105 | 100 | | | | |
| **28" to 48"** | 150 | 115 | 100 | 85 | 65 | 50 | | | | | | |

**Ductile Iron** (ASTM A395) Ratings from ANSI B16.42.
Class 150

| | ***Temperature*** | | | | | | |
|---|---|---|---|---|---|---|---|
| ***Size*** | **-20 to 100** | **200** | **300** | **400** | **500** | **600** | **650** |
| **2"-42"** | 250 | 235 | 215 | 200 | 170 | 140 | 125 |

**Carbon Steel** (ASTM A216-WCB)
Ratings from ANSI B16.34.
Permissible, but not recommended for prolonged usage above about 800°F.

| | ***Pressure Class*** | | | | |
|---|---|---|---|---|---|
| ***Temperature*** | **150** | **300** | **600** | **900** | **1500** |
| **-20 to 100** | 285 | 740 | 1480 | 2220 | 3705 |
| **200** | 260 | 675 | 1350 | 2025 | 3375 |
| **300** | 230 | 655 | 1315 | 1970 | 32780 |
| **400** | 200 | 635 | 1270 | 1900 | 3170 |
| **500** | 170 | 600 | 1200 | 1795 | 2995 |
| **600** | 140 | 550 | 1095 | 1640 | 2735 |
| **650** | 125 | 535 | 1075 | 1610 | 2685 |
| **700** | 110 | 535 | 1065 | 1600 | 2665 |
| **750** | 95 | 505 | 1010 | 1510 | 2520 |
| **800** | 80 | 410 | 825 | 1235 | 2060 |
| **850** | 65 | 270 | 535 | 805 | 1340 |
| **900** | 50 | 170 | 345 | 515 | 860 |
| **950** | 35 | 105 | 205 | 310 | 515 |
| **1000** | 20 | 50 | 105 | 155 | 260 |

**Stainless Steel** (ASTM A351-CF8M)
Ratings from ANSI B16.34.

| | ***Pressure Class*** | | | | |
|---|---|---|---|---|---|
| ***Temperature*** | **150** | **300** | **600** | **900** | **1500** |
| **-20 to 100** | 275 | 720 | 1440 | 2160 | 3600 |
| **200** | 240 | 620 | 1240 | 1860 | 3095 |
| **300** | 215 | 560 | 1120 | 1680 | 2795 |
| **400** | 195 | 515 | 1030 | 1540 | 2570 |
| **500** | 170 | 480 | 955 | 1435 | 2390 |
| **600** | 140 | 450 | 905 | 1355 | 2255 |
| **650** | 125 | 445 | 890 | 1330 | 2220 |
| **700** | 110 | 430 | 865 | 1295 | 2160 |
| **750** | 95 | 425 | 845 | 1270 | 2110 |
| **800** | 80 | 415 | 830 | 1245 | 2075 |
| **850** | 65 | 405 | 810 | 1215 | 2030 |
| **900** | 50 | 395 | 790 | 1180 | 1970 |
| **950** | 35 | 385 | 775 | 1160 | 1930 |
| **1000** | 20 | 365 | 725 | 1090 | 1820 |
| **1050** | | 360 | 720 | 1080 | 1800 |
| **1100** | | 325 | 645 | 965 | 1610 |
| **1150** | | 275 | 550 | 825 | 1370 |
| **1200** | | 205 | 410 | 620 | 1030 |
| **1250** | | 180 | 365 | 545 | 910 |
| **1300** | | 140 | 275 | 410 | 685 |
| **1350** | | 105 | 205 | 310 | 515 |
| **1400** | | 75 | 150 | 225 | 380 |
| **1450** | | 60 | 115 | 175 | 290 |
| **1500** | | 40 | 85 | 125 | 205 |

Ritepro Corporation
A Subsidiary of Bray International, Inc.

**STANDARD SPECIFICATION SHEET**
**Check Rite Wafer Check Valves A-5**
**2" - 12" Series 125/150/300 Model 210**
**Date:** 28 August 2001

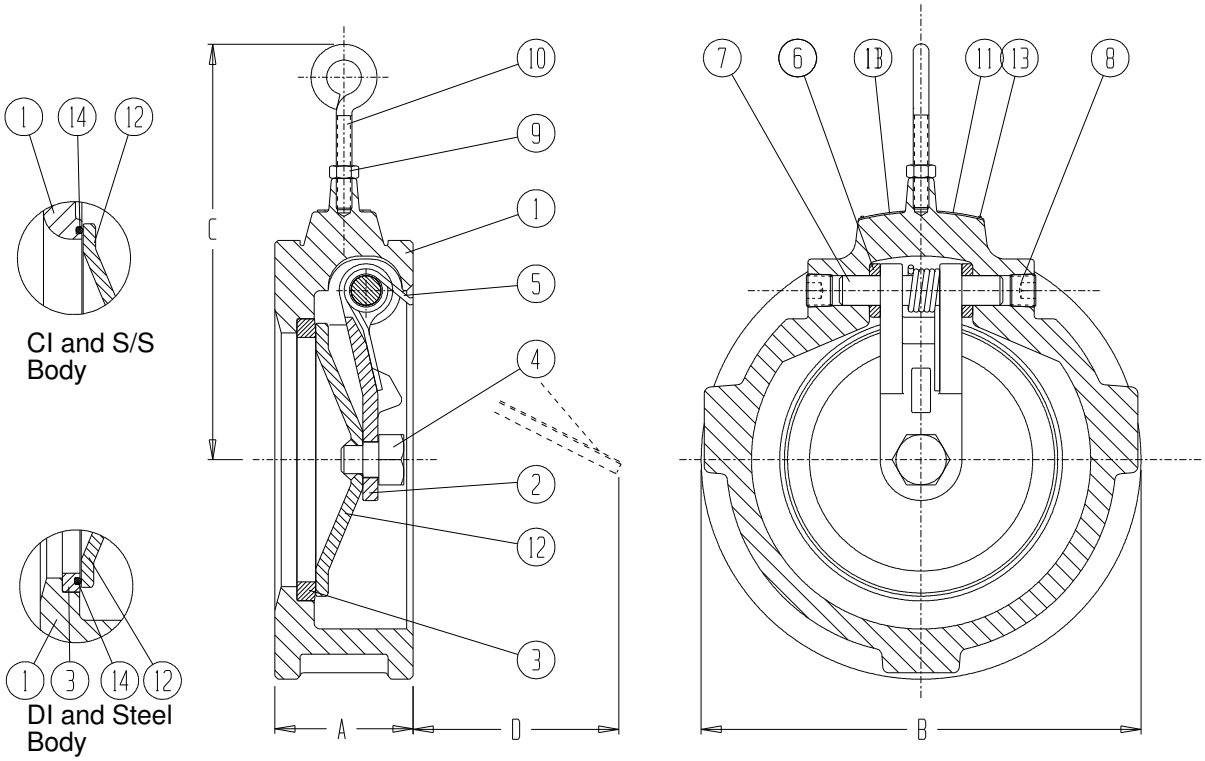


| Item | Description | Standard Material |
|---|---|---|
| 1 | Body | ASTM A216-WCB |
| 2 | Hinge | ASTM A351-CF8M |
| 3 | Seat | ASTM A351-CF8 |
| 4 | Shoulder Pin | ASTM A479-316 |
| 5 | Spring | ASTM A313-316 |
| 6 | Spacer | ASTM A479-316, Teflon |
| 7 | Pin | ASTM A479-316 |

| Item | Description | Standard Material |
|---|---|---|
| 8 | Plug | Steel |
| 9 | Lock Nut | Steel Zinc Plated |
| 10 | Eye Bolt | Steel Zinc Plated |
| 11 | Name Plate | Aluminium |
| 12 | Disc | ASTM A240-316 |
| 13 | Rivet | Steel Cad. Plated |
| 14 | O-Ring | Buna N, Viton, Teflon |

Other body materials available: A126-CLB, A395, A351-CF8M, Monel, Alloy 20, Hastelloy, 254SMO.

| Nominal Pipe Size | | A | | B Class 125/150 | | B Class 300 | | C | | D | | Weight | |
|---|---|---|---|---|---|---|---|---|---|---|---|---|---|
| Inch | mm | Inch | mm | Inch | mm | Inch | mm | Inch | mm | Inch | mm | lbs | kg |
| 2 | 50 | 1.75 * | 44.5 | 4.13 | 104.8 | 4.38 | 111.1 | 4.25 | 108 | 1.19 | 30 | 3.5 | 1.6 |
| 2 1/2 | 65 | 1.88 * | 47.6 | 4.88 | 123.8 | 5.13 | 130.2 | 4.50 | 114 | 1.50 | 38 | 5.0 | 2.3 |
| 3 | 80 | 2.00 * | 50.8 | 5.38 | 136.5 | 5.88 | 149.2 | 5.00 | 127 | 1.69 | 43 | 6.5 | 2.9 |
| 4 | 100 | 2.25 | 57.2 | 6.88 | 174.6 | 7.13 | 181.0 | 5.75 | 146 | 2.44 | 62 | 11 | 5.0 |
| 5 | 125 | 2.50 | 63.5 | 7.75 | 196.9 | 8.50 | 215.9 | 6.50 | 165 | 3.38 | 86 | 15 | 6.8 |
| 6 | 150 | 2.75 | 69.9 | 8.75 | 222.3 | 9.88 | 250.8 | 7.25 | 184 | 4.25 | 108 | 20 | 9.0 |
| 8 | 200 | 2.88 | 73.0 | 11.00 | 279.4 | 12.13 | 308.0 | 8.25 | 210 | 5.38 | 136 | 30 | 13.6 |
| 10 | 250 | 3.13 | 79.4 | 13.38 | 339.7 | 14.25 | 362.0 | 9.63 | 244 | 7.00 | 178 | 47 | 21.3 |
| 12 | 300 | 3.38 | 85.7 | 16.13 | 409.6 | 16.63 | 422.3 | 10.75 | 273 | 8.13 | 206 | 70 | 32 |

* Face to face for Cast Iron Class 125: 2": 2.13"
2½": 2.38"
3": 2.63"

Ritepro Corporation
A Subsidiary of Bray International, Inc.

**STANDARD SPECIFICATION SHEET**
**Check Rite Wafer Check Valves A-5**
**Series 125/150 Model 210**
**Date:** 28 August 2001

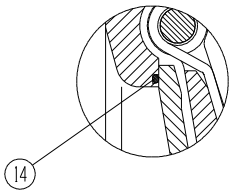


CI and S/S Body

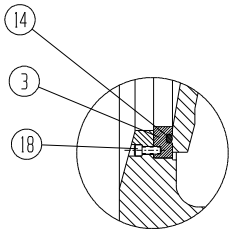


DI and Steel Body

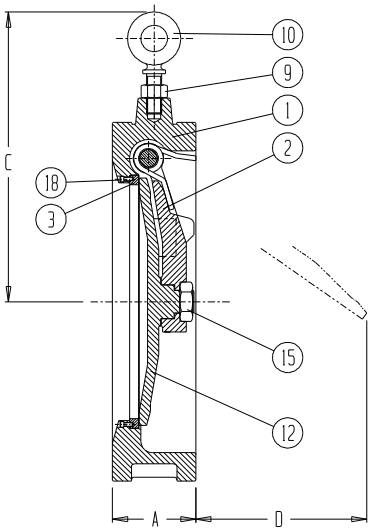


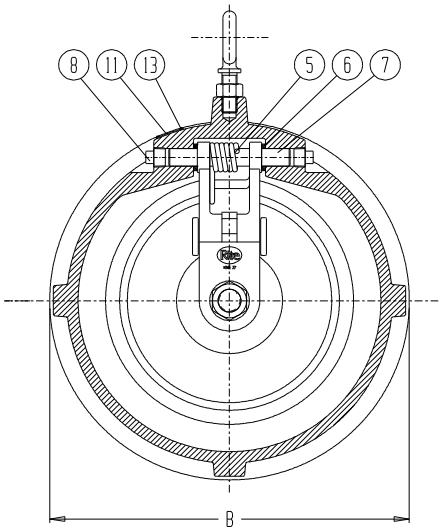


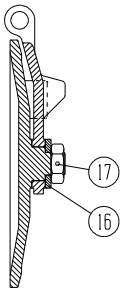


| Item | Description | Standard Material |
|---|---|---|
| 1 | Body | ASTM A216-WCB * |
| 2 | Hinge | ASTM A216-WCB |
| 3 | Seat | ASTM A240-304 |
| 5 | Spring | 17-7PH Stainless |
| 6 | Spacer | ASTM A479-316 |
| 7 | Pin | ASTM A479-316 |
| 8 | Plug | Steel |
| 9 | Lock Nut | Steel Zinc Plated |
| 10 | Eye Bolt | Steel Zinc Plated |

| Item | Description | Standard Material |
|---|---|---|
| 11 | Name Plate | Aluminium |
| 12 | Disc | ASTM A351-CF8 ** |
| 13 | Rivet | Steel Cad. Plated |
| 14 | O-Ring | Buna N, Viton, Teflon |
| 15 | Disc Nut | Steel |
| 16 | Disc Washer | Steel |
| 17 | Dowel Pin | Steel |
| 18 | SHCS | Steel |

** 32" & Larger: A216-WCB with 304 overlay.

*Other body materials available: A126-CLB, A395, A351-CF8M, Monel, Alloy 20, Hastelloy, 254SMO.

| Nominal Pipe Size | | A | | B | | C | | D | | Weight | |
|---|---|---|---|---|---|---|---|---|---|---|---|
| Inch | mm | Inch | mm | Inch | mm | Inch | mm | Inch | mm | lbs | kg |
| 14 | 350 | 4.25 | 108.0 | 17.63 | 447.7 | 13.00 | 330 | 7.25 | 184 | 115 | 52 |
| 16 | 400 | 4.25 | 108.0 | 20.13 | 511.2 | 14.50 | 368 | 8.25 | 210 | 130 | 59 |
| 18 | 450 | 4.25 | 108.0 | 21.50 | 546.1 | 15.25 | 387 | 10.50 | 267 | 170 | 77 |
| 20 | 500 | 5.50 | 139.7 | 23.75 | 603.3 | 18.75 | 476 | 11.00 | 280 | 230 | 104 |
| 24 | 600 | 6.00 | 152.4 | 28.13 | 714.4 | 20.50 | 520 | 15.00 | 381 | 415 | 188 |
| 28 | 700 | 6.50 | 165.1 | 32.50 | 825.5 | 26.13 | 664 | 17.75 | 451 | 519 | 235 |
| 30 | 750 | 9.00 | 228.6 | 34.63 | 879.5 | 27.50 | 698 | 16.25 | 412 | 965 | 438 |
| 32 | 800 | 11.00 | 279.4 | 36.75 | 933.5 | 28.25 | 718 | 14.03 | 356 | 1150 | 522 |
| 36 | 900 | 11.50 | 292.1 | 41.13 | 1044.6 | 30.00 | 762 | 18.25 | 464 | 1525 | 692 |
| 42 | 1050 | 12.00 | 304.8 | 47.88 | 1216.0 | 33.25 | 844 | 28.00 | 712 | 2235 | 1014 |

Ritepro Corporation
A Subsidiary of Bray International, Inc.

**STANDARD SPECIFICATION SHEET**
**Stud Dimensions E-8**
**ANSI Series 125 - 1500**
**Date:** 20 April 2001

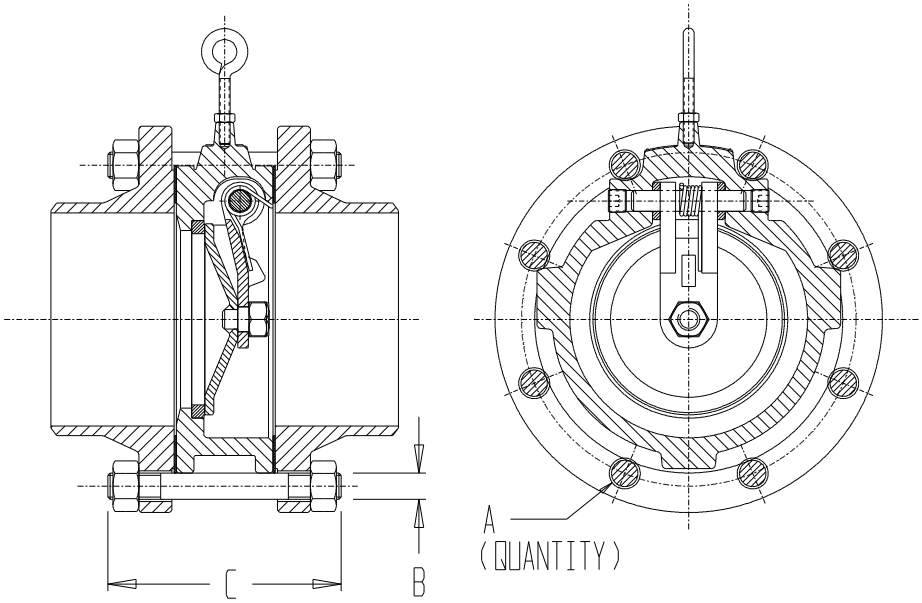


| Nominal Pipe Size | | Series 125 & 150 | | | Series 250 & 300 | | | Series 400 | | |
|---|---|---|---|---|---|---|---|---|---|---|
| | | A | Stud Size B*C | | A | Stud Size B*C | | A | Stud Size B*C | |
| Inch | mm | Studs | Inch | mm | Studs | Inch | mm | Studs | Inch | mm |
| 2 | 50 | 4 | 5/8*4.75 | 16*20 | 8 | 5/8*5.00 | 16*130 | 8 | 5/8*6.50 | 16*165 |
| 2 1/2 | 65 | 4 | 5/8*5.25 | 16*135 | 8 | 3/4*5.75 | 20*145 | 8 | 3/4*7.25 | 20*185 |
| 3 | 80 | 4 | 5/8*5.50 | 16*140 | 8 | 3/4*6.00 | 20*155 | 8 | 3/4*7.75 | 20*200 |
| 4 | 100 | 8 | 5/8*5.75 | 16*145 | 8 | 3/4*6.50 | 20*165 | 8 | 7/8*8.50 | 22*220 |
| 5 | 125 | 8 | 3/4*6.25 | 20*160 | 8 | 3/4*7.00 | 20*180 | | | |
| 6 | 150 | 8 | 3/4*6.50 | 20*165 | 12 | 3/4*7.50 | 20*190 | 12 | 7/8*11 .25 | 22*285 |
| 8 | 200 | 8 | 3/4*7.00 | 20*180 | 12 | 7/8*8.25 | 22*210 | 12 | 1*13.00 | 24*330 |
| 10 | 250 | 12 | 7/8*7.75 | 22*200 | 16 | 1*9.25 | 24*235 | 16 | 1 1/8*15.75 | 28*400 |
| 12 | 300 | 12 | 7/8*8.00 | 22*205 | 16 | 1 1/8*10.00 | 28*255 | 16 | 1 1/4*17.00 | 32*435 |
| 14 | 350 | 12 | 1*9.25 | 24*235 | 20 | 1 1/8*14.00 | 28*280 | | | |
| 16 | 400 | 16 | 1*9.50 | 24*245 | 20 | 1 1/4*14.75 | 32*295 | | | |
| 18 | 450 | 16 | 1 1/8*10.25 | 28*260 | 24 | 1 1/4*15.50 | 32*300 | | | |
| 20 | 500 | 20 | 1 1/8*11.50 | 28*295 | 24 | 1 1/4*16.75 | 32*345 | | | |
| 24 | 600 | 20 | 1 1/4*12.75 | 32*325 | 24 | 1 1/2*17.75 | 38*385 | | | |
| 30 | 750 | 28 | 1 1/4*18.00 | 32*460 | | | | | | |
| 36 | 900 | 32 | 1 1/2*19.50 | 38*495 | | | | | | |
| 42 | 1050 | 36 | 1 1/2*20.50 | 38*520 | | | | | | |

| Nominal Pipe Size | | Series 600 | | | Series 900 | | | Series 1500 | | |
|---|---|---|---|---|---|---|---|---|---|---|
| | | A | Stud Size B*C | | A | Stud Size B*C | | A | Stud Size B*C | |
| Inch | mm | Studs | Inch | mm | Studs | Inch | mm | Studs | Inch | mm |
| 2 | 50 | 8 | 5/8*6.50 | 16*165 | 8 | 7/8*9.50 | 22*245 | 8 | 7/8*9.50 | 22*245 |
| 2 1/2 | 65 | 8 | 3/4*7.25 | 20*185 | 8 | 1*9.50 | 24*245 | 8 | 1*9.50 | 24*245 |
| 3 | 80 | 8 | 3/4*7.75 | 20*200 | 8 | 7/8*9.00 | 22*230 | 8 | 1 1/8*10.25 | 28*260 |
| 4 | 100 | 8 | 7/8*8.75 | 22*225 | 8 | 1 1/8*10.75 | 28*275 | 8 | 1 1/4*11.75 | 32*300 |
| 6 | 150 | 12 | 1*12.00 | 24*305 | 12 | 1 1/8*14.00 | 28*360 | 12 | 1 3/8*16.50 | 35*420 |
| 8 | 200 | 12 | 1 1/8*14.00 | 28*360 | 12 | 1 3/8*16.75 | 35*425 | 12 | 1 5/8*19.50 | 35*495 |
| 10 | 250 | 16 | 1 1/4*16.75 | 32*425 | 16 | 1 3/8*18.75 | 35*480 | 12 | 1 7/8*23.50 | 48*600 |
| 12 | 300 | 20 | 1 1/4*17.50 | 32*435 | 20 | 1 3/8*21.50 | 35*545 | 16 | 2*27.00 | 50*685 |

Ritepro Corporation
A Subsidiary of Bray International, Inc.

**STANDARD SPECIFICATION SHEET**
**Spool Dimensions E-9**
**ANSI Series 125 / 150 / 300**
**Date:** 21 September 2001

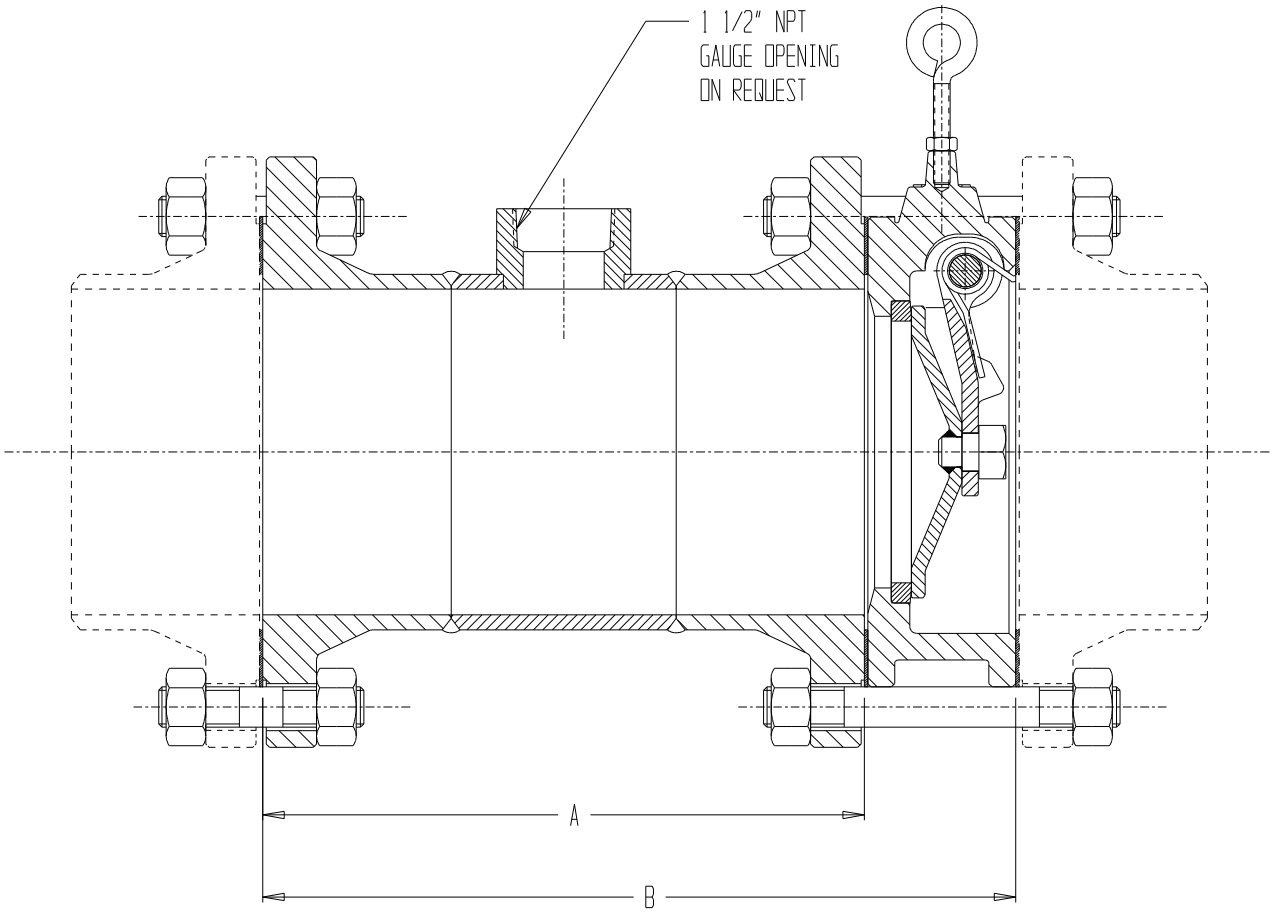


| Nominal Pipe Size | | Series 150 | | | | Series 300 | | | |
|---|---|---|---|---|---|---|---|---|---|
| | | A | | B | | A | | B | |
| Inch | mm | Inch | mm | Inch | mm | Inch | mm | Inch | mm |
| 2 | 50 | 6.19* | 157* | 8.0 | 203 | 8.69 | 221 | 10.5 | 267 |
| 2 1/2 | 65 | 6.56* | 167* | 8.5 | 216 | 9.56 | 243 | 11.5 | 292 |
| 3 | 80 | 7.44* | 189* | 9.5 | 241 | 10.44 | 265 | 12.5 | 318 |
| 4 | 100 | 9.19 | 233 | 11.5 | 292 | 11.69 | 297 | 14.0 | 356 |
| 5 | 125 | 10.44 | 265 | 13.0 | 330 | 13.19 | 335 | 15.75 | 400 |
| 6 | 150 | 11.19 | 284 | 14.0 | 356 | 14.69 | 373 | 17.5 | 445 |
| 8 | 200 | 16.56 | 421 | 19.5 | 495 | 18.06 | 459 | 21.0 | 533 |
| 10 | 250 | 21.31 | 541 | 24.5 | 622 | 21.31 | 541 | 24.5 | 622 |
| 12 | 300 | 24.06 | 611 | 27.5 | 699 | 24.56 | 624 | 28.0 | 711 |
| 14 | 350 | 26.69 | 678 | 31.0 | 787 | 25.69 | 652 | 33.0 | 838 |
| 16 | 400 | 29.69 | 754 | 34.0 | 864 | 26.44 | 672 | 34.0 | 864 |
| 18 | 450 | 34.19 | 868 | 38.5 | 978 | 30.44 | 773 | 38.5 | 978 |
| 20 | 500 | 32.94 | 837 | 38.5 | 978 | 31.31 | 795 | 40.0 | 1016 |
| 24 | 600 | 44.96 | 1141 | 51.0 | 1295 | 44.18 | 1122 | 53.0 | 1346 |
| 30 | 750 | 50.94 | 1294 | 60.0 | 1524 | | | | |
| 36 | 900 | 65.44 | 1662 | 77.0 | 1956 | | | | |

Dimension "B" corresponds to ANSI B16.10.

| Nominal Pipe Size | Series 125 | |
|---|---|---|
| | A | |
| Inch | Inch | mm |
| 2 | 5.81 | 148 |
| 2 1/2 | 6.06 | 154 |
| 3 | 6.81 | 173 |

Remaining dimensions same as Series 150.

Illustrations
2" - 12" Series 125/150/300 Model 210
14" - 42" Series 125/150 Model 210
Stud Dimensions E-8 ANSI Series 125 - 1500
Spool Dimensions E-9 ANSI Series 125 / 150 / 300

Ritepro Corporation
A Subsidiary of Bray International, Inc

***STANDARD SPECIFICATION SHEET***
***Check Rite Wafer Type Swing Check Valve***
***ANSI Series 125 Model CETNSF***
***Date: Sept. 2008***

Class 125 rated at
200 psi at 150 F.

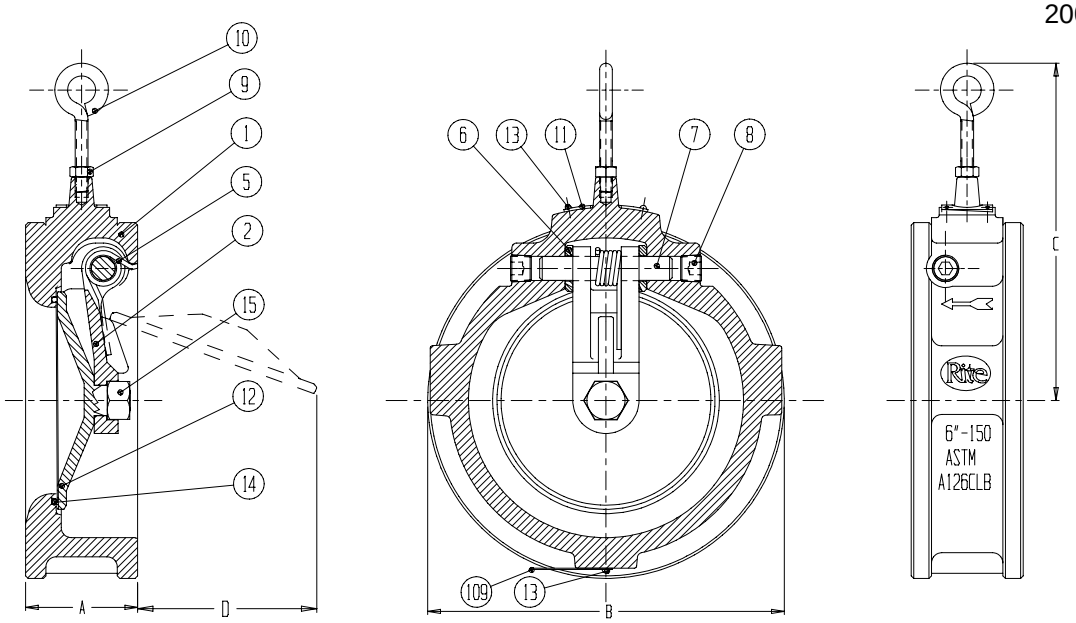


| Item | Description | Standard Material |
|---|---|---|
| 1 | Body | ASTM A126-CLB |
| 2 | Hinge | ASTM A351-CF8M |
| 5 | Spring | ASTM A313-316 |
| 6 | Spacer | Teflon |
| 7 | Pin | ASTM A479-316 |
| 8 | Plug | Steel |
| 9 | Lock Nut | Steel Zinc Plated |

| Item | Description | Standard Material |
|---|---|---|
| 10 | Eye Bolt | Steel Zinc Plated |
| 11 | Name Plate | NSF Ident / Alum. |
| 12 | Disc | ASTM A351-CF8M |
| 13 | Rivet | Steel Cad. Plated |
| 14 | O-Ring | NSF EPDM |
| 15 | Disc Nut | Stainless Steel |
| 109 | Tag NSF | Aluminum |

| Nominal Pipe Size | | A | | B | | C | | D | | Weight | |
|---|---|---|---|---|---|---|---|---|---|---|---|
| Inch | mm | Inch | mm | Inch | mm | Inch | mm | Inch | mm | lbs | kg |
| 2 | 50 | 2.13 | 54.0 | 4.29 | 109 | 4.25 | 108 | 1.19 | 30 | 3.5 | 1.6 |
| 2 1/2 | 65 | 2.38 | 60.3 | 5.08 | 129 | 4.50 | 114 | 1.50 | 38 | 5.0 | 2.3 |
| 3 | 80 | 2.63 | 66.7 | 5.67 | 144 | 5.00 | 127 | 1.69 | 43 | 6.5 | 2.9 |
| 4 | 100 | 2.25 | 57.2 | 6.46 | 164 | 5.75 | 146 | 2.44 | 62 | 11 | 5.0 |
| 5 | 125 | 2.50 | 63.5 | 7.64 | 194 | 6.50 | 165 | 3.38 | 86 | 15 | 6.8 |
| 6 | 150 | 2.75 | 69.9 | 8.66 | 220 | 7.25 | 184 | 4.25 | 108 | 20 | 9.0 |
| 8 | 200 | 2.88 | 73.0 | 10.83 | 275 | 8.25 | 210 | 5.38 | 136 | 30 | 13.6 |
| 10 | 250 | 3.13 | 79.4 | 13.03 | 331 | 9.63 | 244 | 7.00 | 178 | 47 | 21.3 |
| 12 | 300 | 3.38 | 85.7 | 15.19 | 386 | 10.75 | 273 | 8.13 | 206 | 70 | 32 |

# Data sheet

B10 Bookmark missing. Move before swing check valve

valid from: 9/27/18

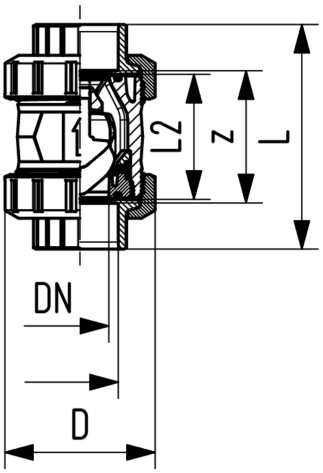


**Check valve type 561 PVC**
**With solvent cement sockets inch ASTM**
**Threaded valve ends NPT**

**Model:**

- Designed for easy installation and removal
- Vibration free even at high flow velocity
- Flow-optimized return cone, double guided
- For vertical installation
- Compact installation length, same as ball valve type 546

| NPT (inch) | PN (psi) | EPDM Part No. | FKM Part No. | D (mm) | L (mm) | L2 (mm) | z (mm) |
|---|---|---|---|---|---|---|---|
| ⅜ | 232 | **161 561 101** | **161 561 111** | 50 | 105 | 56 | 67 |
| ½ | 232 | **161 561 102** | **161 561 112** | 50 | 105 | 56 | 61 |
| ¾ | 232 | **161 561 103** | **161 561 113** | 58 | 121 | 65 | 70 |
| 1 | 232 | **161 561 104** | **161 561 114** | 68 | 133 | 71 | 76 |
| 1 ¼ | 232 | **161 561 105** | **161 561 115** | 84 | 154 | 85 | 90 |
| 1 ½ | 232 | **161 561 106** | **161 561 116** | 97 | 164 | 89 | 94 |
| 2 | 232 | **161 561 107** | **161 561 117** | 124 | 183 | 101 | 107 |
| 2 ½ | 232 | **161 561 108** | **161 561 118** | 166 | 233 | 136 | 144 |
| 3 | 232 | **161 561 109** | **161 561 119** | 200 | 254 | 141 | 151 |
| 4 | 232 | **161 561 110** | **161 561 120** | 238 | 301 | 164 | 174 |

The technical data are not binding. They neither constitute expressly warranted characteristics nor guaranteed properties nor a guaranteed durability. They are subject to modification. Our General Terms of Sale apply.

Georg Fischer Piping Systems Ltd, Postfach, CH-8201 Schaffhausen/Switzerland
Phone +41 -(0)52-631 1111
e-mail: info.ps@georgfischer.com
Internet: http://www.gfps.com

GF Piping Systems

# Betriebsanleitung

## Rückschlagventil Typ 561/ 562

**Vor Montage und Inbetriebnahme des Rückschlagventils diese Betriebsanleitung sorgfältig lesen. Sie enthält wichtige Hinweise zur Vermeidung von Personen- und Sachschäden.**

### 1 Bestimmungsgemässe Verwendung

Rückschlagventile von Georg Fischer sind ausschliesslich dazu bestimmt, gemäss ihrer Funktion nach Einbau in ein Rohrleitungssystem Medien innerhalb der zugelassenen Druck- und Temperaturgrenzen, sowie der chemischen Beständigkeit der gesamten Armatur und aller seiner Komponenten eingesetzt zu werden. Die maximale Betriebsdauer beträgt 25 Jahre.

Rückschlagventile sind für Medien mit Feststoffen nicht geeignet. Bei der Auswahl des Rückschlagventils ist darauf zu achten, dass die Dichte (spezifisches Gewicht) des Kegels grösser ist als die Dichte des Mediums.
Das Rückschlagventil muss für eine einwandfreie Funktion über den Rohrquerschnitt gleichmässig angeströmt werden. Bei Bedarf (nach Pumpen, Richtungsänderungen) ist eine Beruhigungsstrecke vorzusehen. Kavitation ist zu vermeiden.

### 2 Mitgeltende Dokumente

Die Georg Fischer Planungsgrundlagen geben wichtige ergänzende Informationen zum Einsatz des Ventils. Die Planungsgrundlagen erhalten Sie über Ihre Georg Fischer Vertretung oder unter www.piping.georgfischer.com

### 3 Sicherheit und Verantwortung

**Allgemeine Sicherheitshinweise**

Es gelten die gleichen Sicherheitsvorschriften wie für das Rohrleitungssystem, in welches das Rückschlagventil eingebaut wird.

**Anforderungen an den Anwender und Verantwortung des Betreibers**

- Rückschlagventil wird nur bestimmungsgemäss verwendet
- Rohrleitungssystem ist fachgerecht verlegt und wird regelmässig überprüft
- Einbau, Bedienung, Wartung und Reparaturen werden nur von Fachpersonal durchgeführt
- Regelmässige Personalunterweisungen in Arbeitssicherheit, Umweltschutz, vor allem für druckführende Rohrleitungen, finden statt
- Das Personal kennt, versteht und beachtet die vorliegende Betriebsanleitung

**Betriebsanleitung beachten**
Die Betriebsanleitung ist Teil des Produkts und ein wichtiger Bestandteil im Sicherheitskonzept. Nichtbeachtung kann zu schweren Verletzungen führen.
- Betriebsanleitung lesen und befolgen
- Betriebsanleitung stets beim Produkt verfügbar halten
- Betriebsanleitung an alle nachfolgenden Verwender des Produkts weitergeben

### 4 Transport und Lagerung

Das Rückschlagventil muss sorgfältig behandelt, transportiert und gelagert werden:
- Rückschlagventil in seiner Originalverpackung transportieren und lagern
- Vor schädlichen Einflüssen wie Staub, Schmutz, Feuchtigkeit sowie Wärme- und UV-Strahlung schützen
- Anschlussenden dürfen weder durch mechanische noch durch sonstige Einflüsse beschädigt werden

### 5 Aufbau und Funktion

**5.1 Typen**

Typ 561 ohne Feder
Vertikale Installation

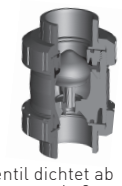

Ventil dichtet ab
Wassersäule 2m ab

Typ 562 mit Feder
Vertikale und
Horizontale Installation

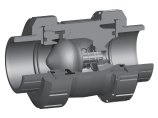

Ventil dichtet ab
Wassersäule 1 m ab

**5.2 Aufbau und Ersatzteilliste**

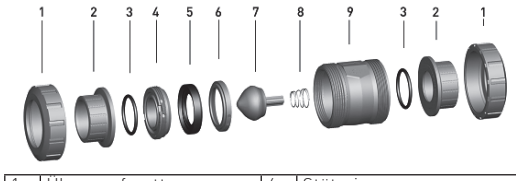


| | | | |
|---|---|---|---|
| 1 | Überwurfmutter | 6 | Stützring |
| 2 | Anschlussteil | 7 | Kegel |
| 3 | O-Ring | 8 | Feder (Typ 562) |
| 4 | Einschraubring | 9 | Gehäuse |
| 5 | Dichtring | | |

**Ersatzteile bestellen**

Bezeichnung und Positionsziffer aus der Ersatzteilliste ablesen. Bestellung mit diesen Angaben und der benötigten Menge an Georg Fischer Vertretung senden.

### 6 Einbau in Rohrleitung

**6.1 Allgemein**

Für den Einbau von Rückschlagventilen in eine Rohrleitung gelten die gleichen Anweisungen wie für die Verbindung von Rohren, Fittings und ähnlichen Rohrleitungselementen. Detaillierte Informationen können den entsprechenden Kapiteln zur Installation und Verbindungstechnik in den «Georg Fischer Planungsgrundlagen» entnommen werden.

**6.2 Vorgehensweise Einbau**

Bitte prüfen Sie das Rückschlagventil vor dem Einbau gemäss folgender Punkte:
- Untersuchung des Ventils auf Transportschäden. Beschädigte Ventile dürfen nicht eingebaut werden.
- Sicherstellen, dass das Rückschlagventil mit Druckklasse, Anschlussart, Anschlussabmessung und Werkstoff den Einsatzbedingungen entspricht.
- Funktionsprobe durchführen, indem geprüft wird, ob der Kegel frei beweglich ist
- Keine Ventile mit Funktionsstörung einbauen
- Durchführung einer wiederholten Funktionsprüfung

**Warnhinweise zur Installation des Rückschlagventils**

**WARNUNG**
Materialbeschädigung der Überwurfmutter oder Gewindebeschädigung durch Einsatz von Zangen oder vergleichbaren Hilfsmitteln durch zu starke Anzugskräfte.
- **d20 - d63**: Überwurfmutter handfest anziehen.
- **› d63**: Überwurfmutter handfest anziehen, danach mit Hilfe eines geeigneten Bandschlüssels (Hebellänge ca. 30cm) um weitere **25° bis 40°** nachziehen, siehe Grafik. Drehmoment-Richtwerte verwenden, siehe Tabelle:

| d (mm) | 75 | 90 | 110 | 160 |
|---|---|---|---|---|
| D (in) | 2 ½" | 3" | 4" | 6" |
| DN (mm) | 65 | 80 | 100 | 150 |
| Anzugsmoment (Nm) | 60 | 70 | 80 | 80 |
| Anzugsmoment (lbf) | 531 | 619 | 708 | 708 |

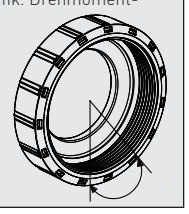

**WARNUNG**
Der Pfeil auf dem Ventilgehäuse gibt die Durchflussrichtung an. Bei vertikalem Durchfluss ist nur die Durchflussrichtung aufwärts zulässig, d. h. der Pfeil muss nach oben zeigen. Bei umgekehrtem Einbau ist die Absperrfunktion nicht gewährleistet.

**WARNUNG**
Durch Schweiss- und Klebeverbindungen dürfen nur identische Werkstoffe miteinander verbunden werden. Rohrleitungsabschnitte mit Klebeverbindungen sind nach Fertigstellung der Verbindungen so bald wie möglich drucklos mit Wasser zu spülen.

**WARNUNG**
Beim Nachrüsten einer Feder muss das mitgelieferte Etikett mit Materialhinweis der Feder am Ventilkörper angebracht werden.

**6.3 Anmerkungen zu Verbindungstechniken**

**Radial ein- und ausbaubares Ventil - Alle Materialien**
1. Überwurfmuttern lösen und auf vorgesehene Rohrenden schieben
2. Anschlussteile je nach Art auf Rohrenden kleben, schrauben oder schweissen (das konkrete Vorhaben ist in den Planungsgrundlagen beschrieben)
3. Rückschlagventil zwischen Anschlussteile setzen
4. Überwurfmuttern von Hand festziehen

**Klebeverbindung - PVC-U, PVC-C und ABS**
Nur identische Werkstoffe miteinander verbinden. Nach Aushärtungszeit der Verbindung, Rohrleitungsabschnitt so schnell wie möglich drucklos mit Wasser spülen (siehe Kapitel «Verbindungstechniken» in den «Georg Fischer Planungsgrundlagen»).

**Schweissverbindung - PP-H und PVDF**
Nur identische Werkstoffe miteinander verbinden (siehe Kapitel «Verbindungstechniken» in den «Georg Fischer Planungsgrundlagen»).

**Flanschverbindung - Alle Materialien**
Anzugsdrehmomente der Schrauben den entsprechenden Kapiteln der «Georg Fischer Planungsgrundlagen» entnehmen.

### 7 Inbetriebnahme

Für die Druckprobe von Rückschlagventilen gelten dieselben Anweisungen wie für die Rohrleitungen, jedoch darf der Prüfdruck den PN des Rückschlagventils nicht überschreiten.
Vorgehensweise Inbetriebnahme
- Kontrollieren, ob alle Armaturen in der erforderlichen Offen- oder Geschlossenstellung sind
- Leitungssystem füllen und vollständig entlüften
- Komponente mit niedrigsten PN bestimmt den maximal zulässigen Prüfdruck im Leitungsabschnitt
- Während Druckprobe Armaturen und Anschlüsse auf Dichtheit prüfen

### 8 Wartung

Rückschlagventile benötigen im normalen Betrieb keine Wartung.

**8.1 Wartungsplan**

| Wartungsintervall | Wartungstätigkeit |
|---|---|
| Periodisch | Rückschlagventil auf Dichtheit prüfen |
| 1–2x pro Jahr | Dauernd geöffnete oder geschlossene Ventile auf Funktionsfähigkeit prüfen |

Bei abweichenden Einsatzbedingungen (z. B. höhere Temperaturen, Medien mit Abriebwirkung) empfehlen wir engere Wartungsintervalle.

### 9 Störungsbehebung

| Störung | Mögliche Ursache | Störungsbehebung |
|---|---|---|
| Undichtheit im Durchgang | Profildichtung beschädigt | Dichtung austauschen |
| Undichtheit im Durchgang | Rückschlagventil verschmutzt | Rückschlagventil ausbauen und reinigen |
| Undichtheit im Durchgang | Rückschlagventil falsch eingebaut | Durchflussrichtung auf dem Rückschlagventil beachten |
| Undichtheit gegen Aussen | Pressung von der Profildichtung zu gering | Einschraubteil im Rückschlagventil nachziehen |
| Undichtheit gegen Aussen | O-Ring Pressung zu gering | Überwurfmuttern nachziehen |
| Undichtheit gegen Aussen | O-Ring fehlt oder ist beschädigt | O-Ringe austauschen |
| Schliesskörper klemmt | Medium nicht geeignet | Zulässige Medien beachten. Siehe «Georg Fischer Planungsgrundlagen» |
| Feder zeigt Fehlfunktion | Feder korrodiert | Chemische Beständigkeiten beachten. Siehe «Georg Fischer Planungsgrundlagen» |
| Erhöhte Geräusche | • Dimensionierung falsch<br>• Strömung V zu hoch<br>• Ein- und Auslaufstrecker nicht beachtet. Empfehlung: mind. 5xDN | • kleineres Ventil einsetzen<br>• Ein- und Auslaufsstrecke vergrössern |

### 10 Zubehör

| Zubehör | Funktion |
|---|---|
| Saugkorb | Schutz vor Verschmutzung |
| Standardhebel 546 | Werkzeug für Demontage |
| PP-H Kegel | Leichterer Schliesskörper |

### 11 EG-Konformitätserklärung

Der Hersteller Georg Fischer Rohrleitungssysteme AG, 8201 Schaffhausen (Schweiz), erklärt, dass Rückschlagventile Typ 561, 562 gemäss der harmonisierten Bauart-Norm EN ISO 16137
1. druckhaltende Ausrüstungsteile im Sinne der EG-Druckgeräterichtlinie 97/23 EG sind und solchen Anforderungen dieser Richtlinie entsprechen, die für Armaturen zutreffen,
2. den für Armaturen zutreffenden Anforderungen der Bauprodukte-Richtlinie 89/106/EG entsprechen.

Das CE-Zeichen an der Armatur zeigt diese Übereinstimmung an (nach der Druckgeräterichtlinie dürfen nur Armaturen grösser DN 25 mit CE gekennzeichnet werden).
Die Inbetriebnahme dieser Rückschlagventile ist so lange untersagt, bis die Konformität der Gesamtanlage, in die die Rückschlagventile eingebaut sind, mit einer der genannten EG-Richtlinien erklärt ist.

Änderungen am Rückschlagventil, die Auswirkungen auf die angegebenen technischen Daten und den bestimmungsgemässen Gebrauch haben, machen diese EG-Konformitätserkärung ungültig. Zusätzliche Informationen können den «Georg Fischer Planungsgrundlagen» entnommen werden.

Schaffhausen, 31.10.2013
**Antonio De Agostini**
R&D Manager

Die technischen Daten sind unverbindlich. Sie gelten nicht als zugesicherte Eigenschaften oder als Beschaffenheits- oder Haltbarkeitsgarantien. Änderungen vorbehalten.
Es gelten unsere Allgemeinen Verkaufsbedingungen.

**161.484.993 / GFDO 6234/1d, 2d, 4d, 6d (11.14)**
© Georg Fischer Rohrleitungssysteme AG
CH-8201 Schaffhausen/Schweiz, 2013
Printed in Switzerland

GF Piping Systems

# Instruction Manual

## Check Valve Type 561/ 562

**Please read this instruction manual carefully before installing and using the check valve. It contains important information on avoiding injury and damage.**

### 1 Proper use

Once they are installed, Georg Fischer Check Valves are designed exclusively to block or transmit fluid within it's function in a piping system and within the pressure and temperature limits and the chemical resistance of the valve and all components involved. The maximum service life is 25 years.

Check valves are not suitable for fluid containing solids. When selecting a check valve, make sure that the density (specific weight) of the cone is greater than that of the fluid.
The flow of the fluid must be even across the entire cross-section of the check valve in order for it to work properly. It may be necessary to incorporate a calming section (after pumps or changes in directions). Cavitation should be avoided.

### 2 Other applicable documents

The "Georg Fischer Planning Fundamentals" provide important additional information on using the valve. The Planning Fundamentals are available from your Georg Fischer representative or from www.piping.georgfischer.com.

### 3 Security and responsibility

**General safety instructions**

The applicable safety instructions are as for the system of pipes in which the check valve is fitted.

**Requirements of the user and responsibility of the operator**
- Check valve must be used properly.
- The pipe system must be properly laid and regularly inspected.
- The installation, operation, maintenance and repairs must only be carried out by specialist personnel.
- Staff must be regularly trained on issues relating to industrial safety and environmental protection, especially for pressurised pipes.
- The personnel must be familiar with this Instruction Manual and understand and comply with its content.

**Compliance with Instruction Manual**
The instruction manual forms part of the product and represents and important integral element of the safety system. Failure to comply can lead to serious injury.
- Read and adhere to the Instruction Manual
- Keep the Instruction Manual available near the product at all times
- Pass the Instruction Manual on to all subsequent users of the product

### 4 Transport and storage

- The check valve must be carefully handled, transported and stored.
- Transport and store the check valve in its original packaging.
- Protect it from damaging influences such as dust, dirt, damp, heat and UV radiation.
- Do not allow the connecting ends to get damaged by mechanical influences or other factors.

### 5 Design and function

**5.1 Types**

Type 561 without spring
Vertical installation

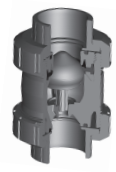

Valve is tight on the
level of 2 m water column

Type 562 with spring
Vertical and
horizontal installation

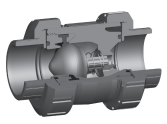

Valve is tight on the
level of 1 m water column

**5.2 Design and spare parts list**

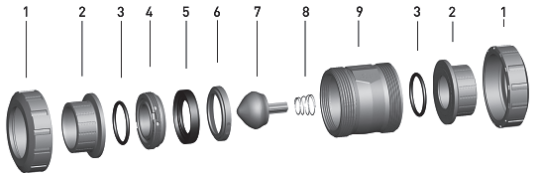


| | | | |
|---|---|---|---|
| 1 | Union nut | 6 | Back-up ring |
| 2 | Connecting part | 7 | Cone |
| 3 | O-ring | 8 | Spring (type 562) |
| 4 | Screw-in ring | 9 | Housing |
| 5 | Sealing ring | | |

**Ordering spare parts**

Take the name and item number from the spare parts list. Please send your order with this information and the quantities you require to your Georg Fischer representative.

### 6 Installation into a pipe

**6.1 General**

Instructions for installing check valves to pipes are the same as for connecting pipes, fittings and similar piping elements. More detailed information can be found in the relevant chapters on installation and connection methods in the "Georg Fischer Planning Fundamentals".

**6.2 Installation process**

Please check the following points on the check valve before installing:
- Check the valve for transport damage. Do not install damaged valves.
- Make sure that the check valve meets the requirements for use in terms of pressure class, connection type, connection dimensions and material.
- Carry out a functional test by checking whether the cone moves freely.
- Do not install valves which are not working correctly.
- Carry out another functional test.

**Warnings on installing the check valve**

**WARNING**
Material damage of the union nut or the thread due to tools, such as pliers or if they are tightened too strong.
- **d20 - d63**: Tighten the union nut handtight.
- **› d63**: First tighten the union nut handtight, then using a proper strap wrench (lever length 30cm) tighten further by **25° to 40°**, see figure. Refer to torque-rates shown in the table below:

| d (mm) | 75 | 90 | 110 | 160 |
|---|---|---|---|---|
| D (in) | 2 ½" | 3" | 4" | 6" |
| DN (mm) | 65 | 80 | 100 | 150 |
| Torque (Nm) | 60 | 70 | 80 | 80 |
| Torque (lbf) | 531 | 619 | 708 | 708 |

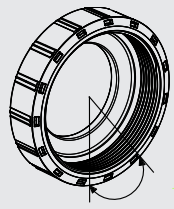

**WARNING**
The arrow on the valve housing indicates the direction of flow. If the flow is vertical, the direction of flow must be upwards, i.e. the arrow must point up. If the valve is installed the wrong way around, the closing function cannot be guaranteed.

**WARNING**
Only identical materials can be joined together by means of welding or cementing. Sections of pipe with cemented connections must be rinsed with non-pressurised water as soon as possible after the connections are finished.

**WARNING**
If the valve is retrofitted with a spring, the valve body must be labelled with the supplied label showing the spring material.

**6.3 Information regarding jointing technique**

**True union design - All materials**
1. Undo the union nuts and push them onto the pipe ends required.
2. cement, screw or weld the connecting part onto the end of the pipe (specific method defined in Planning Fundamentals).
3. Place the check valve between the connecting parts.
4. Tighten the union nuts by hand.

**Cement connection - PVC-U, PVC-C and ABS**
Only connect identical materials to one another. Once the connection has hardened, rinse the section of pipe through with non-pressurised water as soon as possible (see chapter on "Connection Methods" in the "Georg Fischer Planning Fundamentals").

**Fusion connection - PP-H and PVDF**
Only connect identical materials to one another (see chapter on "Connection Methods" in the "Georg Fischer Planning Fundamentals").

**Flange connection - All materials**
The torque settings for the screws can be found in the relevant chapters of the "Georg Fischer Planning Fundamentals".

### 7 Commissioning

The instructions for pressure-testing check valves are the same as for pipes, but the test pressure must not exceed the PN of the check valve.
Commissioning procedure
- Check that all the valves are in the correct open or closed position.
- Fill the pipe system and bleed completely.
- The component with the lowest PN defines the maximum test pressure allowed in the section of pipe.
- During the pressure test, check the seals on all valves and connections.

### 8 Maintenance

Check valves do not require maintenance under normal circumstances.

**8.1 Maintenance plan**

| Maintenance interval | Maintenance activity |
|---|---|
| Periodically | Check the valve on leak tightness. |
| Once or twice a year | When valves are constantly opened or closed, check if they are still working properly. |

We recommend more frequent maintenance intervals if the conditions of use are different (e.g. higher temperatures, fluids with abrassive effect).

### 9 Problem fixing

| Problem | Possible cause | Problem fixing |
|---|---|---|
| Leak in passage | Profile seal damaged | Replace seal |
| Leak in passage | Check valve contaminated | Remove and clean check valve |
| Leak in passage | Check valve incorrectly installed | Note flow direction on the check valve |
| External leak | Pressure on profile seal too low | Tighten the screw in ring at the check valve |
| External leak | O-ring pressure too low | Tighten union nuts |
| External leak | O-ring damaged or missing | Replace O-rings |
| Closing element sticking | Material not suitable | Note suitable materials. see "Planning Fundamentals." |
| Spring malfunctioning | Spring corroded | Note chemical resistance. See "Georg Fischer Planning Fundamentals." |
| Increased noises | • incorrect dimensioning<br>• flow is too high<br>• run-in distance and run-out distance were not observed. Recommendation: at least 5 x DN | • install smaller valve<br>• enlarge the inlet and outlet section |

### 10 Accessories

| Accessoires | Function |
|---|---|
| Screen assembly | Protection against dirt |
| Standard lever 546 | Dismantling tool |
| PP-H cone | Lighter closing element |

### 11 EC declaration of conformity

Manufacturer Georg Fischer Rohrleitungssysteme AG, 8201 Schaffhausen (Switzerland), declares that, in accordance with standardised design norm EN ISO 16137, check valve types 561 and 562
1. are pressure equipment in accordance with the EU Pressure Equipment Directive 97/23 EU and meet the requirements of this directive which apply to valves.
2. meet the requirements applicable to valves set out in the Construction Products Directive 89/106/EU.

The CE mark on the fitting indicates this compliance (according to the Pressure Equipment Directive, only valves larger than DN 25 can bear the CE mark).
These check valves cannot be commissioned until a declaration has been received that the entire system into which the check valves are fitted conforms with one of the EU Directives specified.

Modifications to the check valve which have an impact on the technical specifications provided and the proper use of the device shall invalidate this declaration of conformity. Additional information can be found in the "Georg Fischer Planning Fundamentals".

Schaffhausen, 31.10.2013
**Antonio De Agostini**
R&D Manager

The technical data are not binding. They neither constitute expressly warranted characteristics nor guaranteed properties nor a guaranteed durability. They are subject to modification. Our General Terms of Sale apply.

**161.484.993 / GFDO 6234/1d, 2d, 4d, 6d (11.14)**
© Georg Fischer Rohrleitungssysteme AG
CH-8201 Schaffhausen/Schweiz, 2013
Printed in Switzerland

GF Piping Systems

# Mode d'emploi

## Soupape de retenue Type 561/ 562

**Lire attentivement la présente notice d'utilisation avant le montage et la mise en service de la soupape de retenue. Elle comporte de précieuses informations pour éviter toute blessure des personnes ou endommagement du matériel.**

### 1 Utilisation selon les dispositions

Les soupapes de retenue Georg Fischer sont uniquement destinées, après montage dans un système de canalisations, à fermer et ouvrir le débit de fluides dans les limites de température et de pression autorisées. La vanne est prévue pour l`utilisation selon sa conception et la résistance chimique de la vanne et tous les composants concernés. La durée d'utilisation maximale est de 25 ans.

Les soupapes de retenue ne conviennent pas pour les fluides contenant des particules solides. Lors du choix de la soupape de retenue, vérifier que la densité (poids spécifique) du cône est supérieure à celle du fluide. Pour un fonctionnement optimal de la soupape de retenue, les fluides doivent circuler uniformément dans toute la section de la canalisation. Si nécessaire (après les pompes, en cas de changement de direction), prévoir un circuit de repos. Il est impératif d'éviter toute cavitation.

### 2 Documents afférents

Vous pouvez vous reporter aux « Bases de planification Georg Fischer » pour obtenir des informations complémentaires importantes relatives à l'utilisation de la soupape. Vous obtiendrez les Bases de planification auprès de votre représentant Georg Fischer ou sur www.piping.georgfischer.com

### 3 Sécurité et responsabilité

**Consignes de sécurité générales**

Les prescriptions de sécurité à respecter sont les mêmes que pour le système de tuyauterie dans lequel la soupape de retenue est montée.

**Connaissances requises pour l'utilisateur et responsabilité de l'exploitant**

- Utiliser la soupape de retenue en se conformant exclusivement aux dispositions
- Le système de tuyauterie doit être posé dans les règles de l'art et doit être contrôlé régulièrement
- Le montage, l'utilisation, l'entretien et les réparations doivent être effectués par un personnel qualifié.
- Ce personnel doit suivre régulièrement des séances d'informations en matière de sécurité du travail, de protection de l'environnement et en particulier en matière de tuyauterie sous pression
- Le personnel connaît, comprend et respecte les instructions de la présente notice d'utilisation

**Respecter les instructions de la notice d'utilisation**

La notice d'utilisation est partie intégrante du produit et une composante importante du concept de sécurité. Son non-respect peut provoquer des blessures graves.

- Lire la notice d'utilisation et suivre les instructions
- Toujours conserver la notice d'utilisation à proximité du produit
- Remettre la notice d'utilisation à tous les utilisateurs du produit

### 4 Transport et entreposage

La soupape de retenue doit être manipulée, transportée et entreposée avec soin :

- Transporter et entreposer la soupape de retenue dans son emballage d'origine
- La protéger contre toute influence nocive telle que la poussière, la saleté, l'humidité, la chaleur ou les rayons ultraviolets
- Les extrémités de connexion ne doivent être endommagées ni mécaniquement, ni par d'autres facteurs

### 5 Montage et fonction

**5.1 Types**

Type 561 sans ressort
Installation verticale

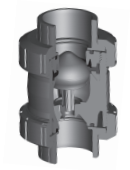

Type 561 est serré au niveau de la colonne d'eau de 2 m

Type 562 avec ressort
Installation verticale
et horizontale

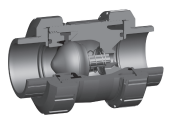

Type 562 est serré au niveau de la colonne d'eau de 1 m

**5.2 Montage et liste des pièces de rechange**

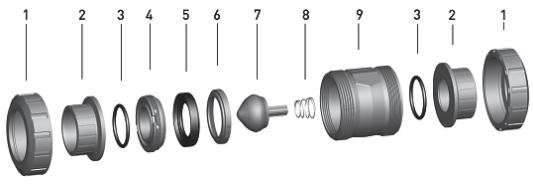


| | | | |
|---|---|---|---|
| 1 | Écrou d'accouplement | 6 | Bague d'appui |
| 2 | Collet | 7 | Cône |
| 3 | Joint torique | 8 | Ressort (Type 562) |
| 4 | Pièce filetée | 9 | Boîtier |
| 5 | Bague d'étanchéité | | |

**Commander des pièces de rechange**

Repérer la désignation et le chiffre de position sur la liste des pièces de rechange. Envoyer la commande avec ces indications et la quantité requise à votre représentant Georg Fischer.

### 6 Montage sur une tuyauterie

**6.1 Généralités**

Les mêmes instructions que pour le raccordement de tuyaux, de raccords et autres éléments de tuyauterie de même type s'appliquent pour le montage des soupapes de retenue sur une tuyauterie. Pour obtenir des informations détaillées sur l'installation et la technique d'assemblage, se reporter aux chapitres « correspondants » dans les « Bases de planification Georg Fischer ».

**6.2 Procédure de montage prévue**

Contrôler la soupape de retenue avant le montage en appliquant la liste suivante :

- Inspecter des soupapes pour détecter d'éventuels dommages dus au transport Ne pas monter de soupape endommagée.
- Vérifier que la soupape de retenue respecte bien les conditions d'utilisation en matière de classe de pression, type de raccordement, dimensions de raccordement et matériau
- Procéder au test de fonctionnement qui consiste à vérifier que le cône peut se mouvoir librement.
- Ne pas monter de soupape qui ne fonctionne pas correctement
- Effectuer un deuxième test de fonctionnement

**Avertissement concernant l'installation de la soupape de retenue**

**AVERTISSEMENT**
Le matériau de l'écrou d'accouplement ou le filetage risque d'être endommagé par des forces de serrage excessives exercées lors de l'utilisation de pinces ou d'outils d'aide similaires.

- **d20 - d63**: Serrer l'écrou d'accouplement à la main.
- **› d63**: Serrer l'écrou d'accouplement à la main, puis utiliser clé à sangle (avec longueur du levier 30cm) pour serrer l'écrou de **25° à 40°**, voir le graphique. Utiliser les couples indiqués, voir le tableau:

| d (mm) | 75 | 90 | 110 | 160 |
|---|---|---|---|---|
| D (in) | 2 1/2" | 3" | 4" | 6" |
| DN (mm) | 65 | 80 | 100 | 150 |
| Couple (Nm) | 60 | 70 | 80 | 80 |
| Couple (lbf) | 531 | 619 | 708 | 708 |

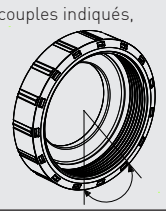

**ATTENTION**
La flèche sur le corps de la soupape indique le sens de passage du fluide. En cas de débit vertical, le seul sens de passage du fluide autorisé est vers l'avant. Par conséquent, la flèche doit pointer vers le haut. En cas de montage inversé, la fonction d'arrêt n'est pas garantie.

**ATTENTION**
En cas d'assemblage soudé ou collé, assembler uniquement des matériaux identiques. Rincer rapidement à l'eau sans pression les sections de tuyauterie présentant des assemblages collés une fois l'assemblage terminé.

**ATTENTION**
En cas que la vanne soit équipé d` un ressort après coup, il faut mettre l`étiquette fournie avec le ressort sur le corps de la vanne.

**6.3 Remarques concernant les techniques d'assemblage**

**Soupape montable et démontable radialement - Tous les matériaux**

1. Desserrer les écrous d'accouplement et les faire glisser aux extrémités de tube prévues
2. En fonction du type d'extrémité du tube, coller, visser ou souder les éléments à assembler (l'opération concrète est décrite dans les Bases de planification)
3. Installer une soupape de retenue entre les éléments assemblés
4. Serrer les écrous d'accouplement à la main

**Assemblage collé - PVC-U, PVC-C et ABS**

Assembler uniquement des matériaux identiques. Une fois le temps de durcissement de l'assemblage écoulé, rincer rapidement la section de tuyauterie à l'eau sans pression (voir le chapitre « Techniques d'assemblage » des « Bases de planification Georg Fischer »).

**Assemblage soudé - PP-H et PVDF**

Assembler uniquement des matériaux identiques (voir le chapitre « Techniques d'assemblage » des « Bases de planification Georg Fischer »).

**Assemblage par bride - Tous les matériaux**

Pour connaître le couple de serrage des vis, consulter les chapitres « Correspondants » dans les « Bases de planification Georg Fischer ».

### 7 Mise en service

Pour le test de fonctionnement des soupapes de retenue, les instructions sont les mêmes que pour les tuyauteries, mais il faut veiller à ce que la pression de test ne dépasse pas la pression nominale de la soupape de retenue.

Procédure de mise en service

- S'assurer que tous les robinets sont dans la position (ouverte ou fermée) requise
- Remplir le système de tuyauterie et le purger entièrement
- Les composants dont la pression nominale est la plus basse déterminent la pression de test maximale autorisée dans la section de tuyauterie
- Pendant le test de fonctionnement, vérifier l'étanchéité des robinets et des raccordements

### 8 Entretien

Dans des conditions d'utilisation normales, les soupapes de retenue ne nécessitent aucun entretien.

**8.1 Plan d'entretien**

| Intervalle d'entretien | Opération d'entretien |
|---|---|
| Périodique | Vérifier l'étanchéité de la soupape de retenue |
| 1–2 fois par an | Vérifier le bon fonctionnement des soupapes ouvertes ou fermées en permanence |

Dans des conditions d'utilisation divergentes (par exemple, températures élevées, fluides de abrasifs), prévoir des intervalles d'entretien plus courts.

### 9 Dépannage

| Problème | Cause possible | Dépannage |
|---|---|---|
| Défaut d'étanchéité dans le passage | Joint profilé endommagé | Remplacer le joint |
| Défaut d'étanchéité dans le passage | Soupape de retenue obstruée | Démonter la soupape de retenue et la nettoyer |
| Défaut d'étanchéité dans le passage | Soupape de retenue mal montée | Respecter le sens du passage du fluide sur la soupape de retenue |
| Défaut d'étanchéité vers l'extérieur | Serrage du joint profilé insuffisant | Resserrer la pièce filetée de la soupape de retenue |
| Défaut d'étanchéité vers l'extérieur | Serrage du joint torique insuffisant | Resserrer les écrous d'accouplement |
| Défaut d'étanchéité vers l'extérieur | Joint torique manquant ou endommagé | Remplacer le joint torique |
| L'obturateur se bloque | Fluide inapproprié | Utiliser des fluides appropriés. Voir les « Bases de planification Georg Fischer » |
| Le ressort ne fonctionne pas correctement | Ressort corrodé | Tenir compte des résistances chimiques. Voir les « Bases de planification Georg Fischer » |
| Bruits anormaux | • Dimension incorrect<br>• Débit trop élevé<br>• Le pilotage a distance n'a pas été respecté. Recommandation: au moins 5 x DN | • installer une vanne plus petite<br>• augmentez les tronçons d'alimentation et de sortie |

### 10 Accessoires

| Accessoires | Fonction |
|---|---|
| Crépines complètes | Protection contre l'encrassement |
| Levier standard 546 | Outil de démontage |
| Cône PP-H | Obturateur plus léger |

### 11 Déclaration de conformité CE

Le fabricant, Georg Fischer Rohrleitungssysteme AG, 8201 Schaffhausen (Suisse), déclare que conformément à la norme de conception harmonisée EN ISO 16137, les soupapes de retenue type 561, 562

1. sont des pièces soumises à la pression en vertu de la directive CE 97/23 sur les équipements sous pression et satisfont aux exigences de cette directive applicables à la robinetterie,
2. sont conformes aux exigences de la norme 89/106/CE relative aux produits de construction.

Le sigle CE apposé sur le robinet atteste de ces conformités (conformément à la directive des équipements sous pression, seuls les robinets supérieurs à DN 25 peuvent être marqués du sigle CE).

La mise en service de ces soupapes de retenue est interdite tant que l'installation (dans sa globalité) sur laquelle les soupapes de retenue sont montées n'est pas en conformité avec les directives CE mentionnées.

Toute modification apportée à la soupape de retenue et ayant des conséquences sur les données techniques ou l'utilisation conforme aux dispositions, rend la présente déclaration de conformité CE caduque. Pour toute information supplémentaire à ce sujet, se reporter aux Bases de planification Georg Fischer.

Schaffhausen, 31.10.2013
**Antonio De Agostini**
R&D Manager

Les données techniques sont fournies à titre indicatif. Elles ne sont pas des garanties et ne constituent pas non plus un gage de propriété intrinsèque ou de durabilité. Sous réserve de modifications. Nos conditions générales de vente s'appliquent.

**161.484.993 / GFDO 6234/1d, 2d, 4d, 6d (11.14)**
© Georg Fischer Rohrleitungssysteme AG
CH-8201 Schaffhausen/Schweiz, 2013
Printed in Switzerland

GF Piping Systems

# Manual de instrucciones

## Válvula de retención Tipo 561/ 562

**Antes de efectuar el montaje y la puesta en marcha de la válvula de retención, lea detenidamente estas instrucciones de uso. Contienen indicaciones importantes para evitar que se produzcan daños personales o materiales.**

### 1 Utilización adecuada

La válvula y sus componentes están diseñados para su aplicación dentro de los límites de resistencia química de la aplicación. La vida útil máxima es de 25 años.

Las válvulas de retención no son apropiadas para medios con sustancias sólidas. A la hora de elegir la válvula de retención, hay que comprobar que la densidad (peso específico) del cono sea superior a la densidad del medio.
Para garantizar un funcionamiento perfecto, la corriente debe pasar por la válvula de forma uniforme a través de la sección transversal del tubo. En caso de necesidad (tras bombeos o cambios de dirección) se debe prever una distancia de amortiguamiento. Se debe evitar la cavitación.

### 2 Documentos relevantes

Los «Fundamentos básicos de planificación de Georg Fischer» brindan una importante información complementaria para la utilización de la válvula. Recibirá los fundamentos básicos de planificación a través de su representante de Georg Fischer o en www.piping.georgfischer.com

### 3 Seguridad y responsabilidad

**Indicaciones generales sobre la seguridad**

Las normativas de seguridad aplicables son las que se correspondan con el sistema de tuberías en el que se instala la válvula de retención.

**Requisitos del usuario y responsabilidad del operador**

- La válvula de retención se utiliza sólo conforme a las disposiciones
- El sistema de tuberías debe ser instalado por profesionales y revisado regularmente
- La instalación, el funcionamiento, el mantenimiento y las reparaciones solo los debe efectuar personal cualificado y autorizado
- Se realizan regularmente capacitaciones de personal en el ámbito de la seguridad laboral y la protección del medio ambiente, sobre todo en el caso de sistemas de tuberías que llevan presión
- El personal conoce, comprende y observa las presentes instrucciones de uso

**Observar las instrucciones de us**

Las instrucciones de uso son una parte del producto y un componente importante del concepto de seguridad. Si no se siguen las instrucciones, pueden provocarse lesiones graves.

- Leer y seguir las instrucciones de uso
- Tener siempre a disposición cerca del producto las instrucciones de uso
- Entregar las instrucciones de uso a todos los usuarios sucesivos del producto

### 4 Transporte y almacenamiento

La válvula de retención debe ser manipulada, transportada y almacenada con cuidado:

- La válvula de retención debe transportarse y almacenarse en su embalaje original
- Se la debe proteger de influencias nocivas tales como polvo, suciedad, humedad, calor y radiación ultravioleta
- Los extremos de conexión de la válvula de retención se deben proteger especialmente de las influencias mecánicas o de otro tipo.

### 5 Montaje y funcionamiento

**5.1 Tipos**

Tipo 561 sin resorte
Instalación vertical

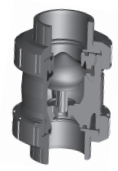

La válvula está ajustada en el nivel de la columna de agua de 2 m

Tipo 562 con resorte
Instalación vertical
y horizontal

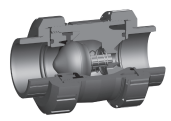

La válvula está ajustada en el nivel de la columna de agua de 1 m

**5.2 Montaje y lista de piezas de repuesto**

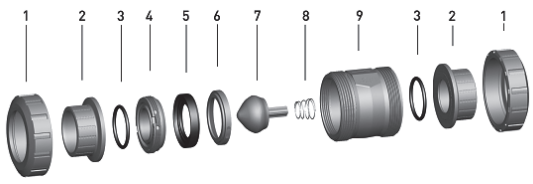


| | | | |
|---|---|---|---|
| 1 | Tuerca de unión | 6 | Anillo de apoyo |
| 2 | Attacco | 7 | Cono |
| 3 | Junta tórica | 8 | Resorte (tipo 562) |
| 4 | Anillo roscado | 9 | Carcasa |
| 5 | Junta | | |

**Pedir piezas de repuesto**

Consultar la denominación y la cifra de posición en la lista de piezas de repuesto. Enviar el pedido al representante de Georg Fischer indicando estos datos y la cantidad correspondiente.

### 6 Montaje en tuberías

**6.1 General**

Para el montaje de válvulas de retención en una tubería, se aplican las mismas indicaciones que para la conexión de tubos, piezas de empalme y otros elementos similares de la tubería. Encontrará información detallada en el capítulo que aborda las técnicas de conexión e instalación de los «Fundamentos básicos de planificación de Georg Fischer».

**6.2 Estrategia de montaje**

Compruebe los siguientes aspectos de la válvula de retención antes de realizar el montaje:

- Inspección de daños provocados por el transporte de la válvula. No deben instalarse válvulas que presenten daños.
- Asegúrese de que la válvula de retención se ajusta a las condiciones de uso correspondientes (clase de presión, tipo de conexión, dimensiones de la conexión y materiales).
- Realice pruebas de funcionamiento para determinar si el cono se mueve libremente
- No instale válvulas que presenten fallos de funcionamiento
- Realización de una prueba de funcionamiento repetida.

### 10 Accesorio

| Accesorio | Función |
|---|---|
| Filtro colador | Protección contra la suciedad |
| Palanca estándar 546 | Herramienta para desmontaje |
| Cono PP-H | Cuerpo de cierre más ligero |

### 11 Declaración de conformidad CE

El fabricante Georg Fischer Rohrleitungssysteme AG, 8201 Schaffhausen (Suiza) declara que las válvulas de retención de los tipos 561 y 562, conforme a la norma de construcción armonizada EN ISO 16137,

1. son accesorios que soportan presión según la directiva sobre aparatos de presión de la CE 97/23/CE y cumplen las correspondientes exigencias de esta directiva en cuanto a válvulas,
2. cumplen las exigencias en cuanto a válvulas de la directiva 89/106/CE para productos de construcción.

La etiqueta CE en la válvula indica esta conformidad (según la directiva para equipos de presión, sólo deben portar la etiqueta CE las válvulas de más de 25 DN).

La puesta en marcha de esta válvula de retención queda prohibida hasta que se declare la conformidad del sistema completo en el que está instalada la válvula de retención con lo establecido en una de las directivas CE mencionadas anteriormente.

Las modificaciones de la válvula de retención que provoquen cambios en las especificaciones técnicas originales y en el uso previsto, provocarán la nulidad de la presente declaración de conformidad. Puede encontrar información adicional al respecto en los «Fundamentos básicos de planificación de Georg Fischer».

Schaffhausen, 31.10.2013
**Antonio De Agostini**
R&D Manager

Los datos técnicos son sin compromiso. Éstos no contienen ninguna promesa de propiedades. Salvo modificaciones. Son válidas nuestras Condiciones Generales de Venta.

**161.484.993 / GFDO 6234/1d, 2d, 4d, 6d (11.14)**
© Georg Fischer Rohrleitungssysteme AG
CH-8201 Schaffhausen/Schweiz, 2013
Printed in Switzerland

**Advertencias sobre la instalación de la válvula de retención**

**ADVERTENCIA**
Daños materiales en la tuerca de unión o daños en la rosca si se utilizan pinzas u otras herramientas similares a causa de fuerzas de apriete demasiado intensas.

- **d20 - d63**: Apretar las tuercas de unión manualmente.
- **› d63**: Apretar las tuercas de unión manualmente, despues utilizar la llave de cinta adecuada (longitud de la palanca 30cm) para apretar las tuercas de unión más que **25° a 40°**, ver imagen. Utilizar los valores para el par de apriete indicados en la siguien te tabla

| d (mm) | 75 | 90 | 110 | 160 |
|---|---|---|---|---|
| D (in) | 2 1/2" | 3" | 4" | 6" |
| DN (mm) | 65 | 80 | 100 | 150 |
| Par (Nm) | 60 | 70 | 80 | 80 |
| Par (lbf) | 531 | 619 | 708 | 708 |

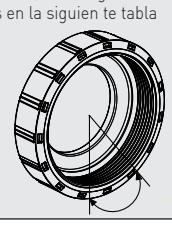

**ADVERTENCIA**
La flecha de la carcasa de la válvula indica el sentido del flujo. Si el flujo es vertical, solo se permite el sentido del flujo hacia arriba. Es decir, la flecha debe apuntar hacia arriba. En montajes invertidos, no se garantiza la función de bloqueo.

**ADVERTENCIA**
En conexiones soldadas y pegadas, se deben conectar solamente materiales idénticos entre sí. Tan pronto como se pueda, se deben limpiar las secciones de tubería con conexiones soldadas con agua sin presión tras la soldadura.

**ADVERTENCIA**
Si se equipa la válvula con un muelle, en el cuerpo se debe identificar el material del mismo con la etiqueta adhesiva suministrada.

**6.3 Observaciones sobre las técnicas de conexión**

**Válvula de montaje y desmontaje en línea - Todos los materiales**

1. Afloje las tuercas racor y colóquelas en los extremos del tubo correspondientes
2. En función del tipo que sean, pegue, atornille o suelde las piezas de conexión a los extremos del tubo (los procedimientos concretos se detallan en los fundamentos básicos de planificación)
3. Coloque la válvula de retención entre las piezas de conexión
4. Apriete manualmente las tuercas racor

**Conexión pegada - PVC-U, PVC-C y ABS**

Conecte solo materiales idénticos. Cuando la conexión haya fraguado, limpie la sección de tubería a la mayor brevedad con agua sin presión (consulte el capítulo que aborda las técnicas de conexión de los «Fundamentos básicos de planificación de Georg Fischer»).

**Conexión soldada - PP-H y PVDF**

Conecte solo materiales idénticos (consulte el capítulo que aborda las técnicas de conexión de los «Fundamentos básicos de planificación de Georg Fischer»).

**Conexión por brida - Todos los materiales**

Consulte el par de apriete de los tornillos en el capítulo correspondiente de los «Fundamentos básicos de planificación de Georg Fischer».

### 7 Puesta en marcha

Para la prueba de presión de las válvulas de retención se aplican las mismas indicaciones que para las tuberías, pero la presión de prueba no debe sobrepasar el PN de la válvula de retención.

Estrategia de puesta en marcha

- Compruebe que todas las válvulas se encuentran en la posición adecuada (abiertas o cerradas)
- Llene el sistema de tuberías y realice una purga de aire completa
- Los componentes con el PN más bajo determinan la presión de prueba máxima admitida en la sección de tubería
- Durante la prueba de presión, compruebe la hermeticidad de las válvulas y las conexiones

### 8 Mantenimiento

En condiciones normales de uso, las válvulas de retención no requieren mantenimiento.

**8.1 Planificación de mantenimiento**

| Intervalo de mantenimiento | Actividades de mantenimiento |
|---|---|
| Periódico | Comprobar la hermeticidad de la válvula de retención |
| 1–2 veces al año | Comprobar la capacidad de funcionamiento de las válvulas abiertas o cerradas permanentemente |

En condiciones de uso cambiantes (p. ej. temperaturas altas, medios con efecto de salida), se recomienda establecer períodos de mantenimiento más cortos.

### 9 Solución de problemas

| Problema | Posible causa | Solución del problema |
|---|---|---|
| Fuga en un paso | Junta de perfil dañada | Cambiar la junta |
| Fuga en un paso | Válvula de retención sucia | Desmontar y limpiar la válvula de retención |
| Fuga en un paso | Montaje incorrecto de la válvula de retención | Comprobar el sentido del flujo que se indica en la válvula de retención |
| Fuga hacia fuera | Junta de perfil poco apretada | Apriete la pieza de tornillo de la válvula de retención |
| Fuga hacia fuera | Junta tórica poco apretada | Apriete las tuercas racor |
| Fuga hacia fuera | Falta la junta tórica o está dañada | Cambiar la junta tórica |
| Cuerpo de cierre atascado | El medio no es apropiado | Comprobar los medios admitidos. Consulte los «Fundamentos básicos de planificación de GF». |
| Mal funcionamiento del resorte | El resorte está corroído | Compruebe la resistencia química. Consulte los «Fundamentos básicos de planificación de GF». |
| incremento de ruidos | • Dimensionamiento incorrecto<br>• El caudal es demasiado elevado<br>• Las distancias aguas arriba y aguas abajo no fueron consideradas. Recomendación: al menos 5 x DN | • Instalar una valvula mas pequeña<br>• Aumente las distancias a la entrada y a la salida |

# MODEL BT SERIES 22

ORBINOX
VALVE SOLUTIONS IN MORE THAN 70 COUNTRIES

## HEAVY DUTY KNIFE GATE VALVE

The BT(SER.22) model knife gate is a bi-directional lug type valve designed according to MSS-SP-81 and TAPPI TIS 405-8 for industrial service applications. The completely new design of the body and seat (patented) assures non-clogging shut off on suspended solids in industries such as:

- Pulp and Paper
- Wastewater
- Food and Beverage
- Power plants
- Mining
- Chemical plants
- Etc.

**Sizes:**

DN 2"/50mm to DN 36"/900mm (larger diameters on request)

**Working pressure:**

| | |
|---|---|
| DN 2"/50mm to DN 24"/600mm: | 150psi / 10bar |
| DN 30"/750mm: | 100psi / 7bar |
| DN 36"/900mm: | 100psi / 7bar |

**Standard flange connection:**

ANSI B16.5 (class 150)
Others on request

**Directives:**

2006/42/CE (MACHINES)
2014/68/EU (PED) Fluid: Group 1(b), 2 (Cat. I, mod. A)
2014/34/EU (ATEX)

All valves are tested prior to shipping in accordance with the standard developed by the Quality Control Department at ORBINOX.

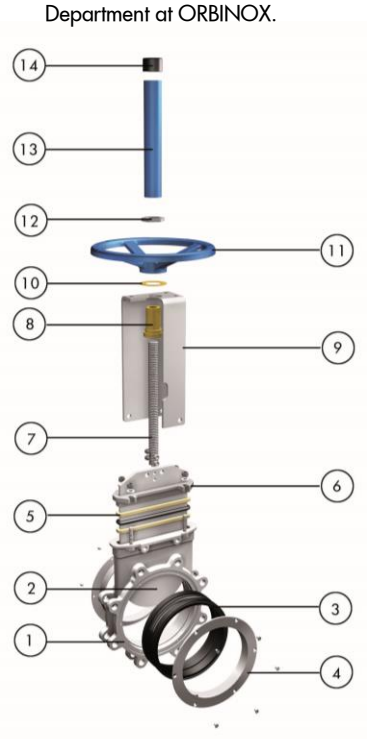


## STANDARD PARTS LIST

| Part: | Stainless Steel: |
|---|---|
| 1- Body | CF8M / CF8 |
| 2- Gate | AISI 316 / AISI 304 |
| 3- Sleeve | EPDM |
| 4- Seat Ring | CF8M / CF8 |
| 5- Packing | PTFE Impreg. Synth. Fibre + EPDM O-Ring |
| 6-Gland Follower | CF8M / CF8 |
| 7- Stem | Stainless Steel |
| 8- Stem nut | Brass |
| 9- Yoke | AISI 304 / Carbon Steel - Epoxy Coated |
| 10- Thrust Washer | Brass |
| 11- Handwheel | Ductile iron |
| 12- Nut | Zinc Plated Carbon Steel |
| 13- Stem protector | Carbon Steel - Epoxy Coated |
| 14- Cap | Plastic |

# MODEL BT SERIES 22

ORBINOX
VALVE SOLUTIONS IN MORE THAN 70 COUNTRIES

## DESIGN FEATURES

**BODY:**

One piece integrally cast stainless steel body with reinforced ribs in larger diameters for extra body strength.
Port design according to MSS-SP-81 and Tappi TIS 405-8.
Internal design avoids any build up of solids that could prevent valve from closing.

**GATE:**

Standard AISI 316 or AISI 304 stainless steel gate.
Gates polished and lapped for a greater seal between the gate and both the packing and seat.

**SEAT: (resilient)**

Patented. Totally new design.
The resilient seat is an elastomer sleeve, available in different materials.
This sleeve which supports, protects and also guides the gate is slotted in the top half to allow gate travel, and guarantees full tightness with low friction. The sleeve is held by means of two seat rings which support it and also guide the gate.

**PACKING:**

Standard braided PTFE impregnated synthetic fibre with EPDM o-ring for better shut off, with an easy access packing gland ensuring a tight seal. The long-life braided packing is available in a wide range of materials.

**STEM:**

The standard stainless steel stem offers a long corrosion resistant life. For rising stem actuators only, a stem protector is provided for additional protection against dust and damage while the valve in the open position.

**ACTUATORS:**

All actuators supplied by ORBINOX are interchangeable and supplied with a standard mounting kit to allow for installation on site.

**YOKE or ACTUATOR SUPPORT:**

Made of stainless steel (EPOXY coated carbon steel available on request). Compact design makes it extremely robust even under the most severe conditions.

**EPOXY COATING:**

The epoxy coating on all ORBINOX cast iron and carbon steel valve components is electrostatically applied making them corrosion resistant with a high quality finished surface. The ORBINOX standard colour is RAL-5015 blue.

**GATE SAFETY PROTECTION:**

*ORBINOX automated valves are provided with gate guards in accordance with EU Safety Standards. The design feature prevents any objects from being caught accidentally while the gate is moving.
* IN EUROPE ONLY

**OTHER MATERIALS:**

On request, the body and the gate can be supplied in other materials.

# MODEL BT SERIES 22

ORBINOX
VALVE SOLUTIONS IN MORE THAN 70 COUNTRIES

## ACTUATOR TYPES

MANUAL:
Handwheel (rising stem)
Handwheel (non-rising stem)
Chainwheel
Bevel Gear
Other (square nut…)

AUTOMATION:
Electric
Double Acting Pneumatic
Single Acting Pneumatic
Hydraulic

All actuators supplied by ORBINOX are interchangeable.

## FAIL SAFE SYSTEMS

Used on pneumatic actuated valves

### SINGLE ACTING (SPRING RETURN)

- Available from
  DN 2"/50mm to DN 12"/300mm
- Supply pressure:
  - min. 75 psi /(5 bar )
  - max. 150 psi /(10 bar)
- Options:
  - Pneumatic or electric fail open
  - Pneumatic or electric fail close
  - Other options on request

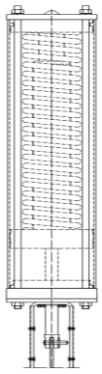

### DOUBLE ACTING WITH AIR TANK

- Available for all valve sizes
- Supply pressure:
  - min. 50 psi / (3.5 bar)
  - max. 150 psi / (10 bar)
- Options:
  - Pneumatic or electric fail open
  - Pneumatic or electric fail close
  - Other options on request

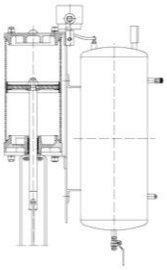

## ACCESSORIES

Bonnet
Mechanical stops
Locking device
Manual override
Solenoid valves
Positioners
Limit switches
Proximity switches
Floor stands
Stem extensions

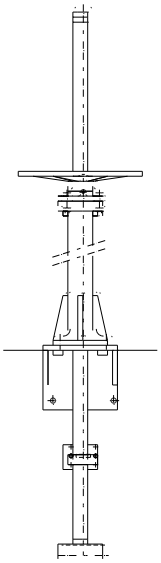

Wide range of valve extensions available.

*For further information about fail safe systems and valve extensions, please see EX(SER.10) catalog.*

We recommend consultation with our technical department.

# MODEL BT SERIES 22

ORBINOX
VALVE SOLUTIONS IN MORE THAN 70 COUNTRIES

## TEMPERATURE CHART

### SEAT / SLEEVE

| Material | Max.Temp.(°F) | (°C) | Applications |
|---|---|---|---|
| EPDM (E) | 248 | 120 | Acids and non mineral oils |
| NBR (N) | 248 | 120 | Resistance to petroleum products |
| FKM-FPM (V) | 392 | 200 | Chemical service/High temp. |

More details and other materials upon request.
All are reinforced with a metal core.

### PACKING

| Material | Max.Temp.(°F) | (°C) | pH |
|---|---|---|---|
| Dry cotton (AS) | 122 | 50 | 6-8 |
| PTFE impregn. synth. fibre (ST) | 464 | 240 | 2-13 |
| Braided PTFE (TH) | 560 | 260 | 0-14 |
| Graphited (GR) | 1112 | 600 | 0-14 |
| Ceramic fibre (FC) | 2192 | 1200 | --- |

NOTE: all types include an elastomere O-ring (same material as sleeve), excluding TH, GR and FC.

## SEAT

RESILIENT SEAT:
The new seat (patented) is a slotted sleeve on its top half and includes a metal core in the bottom half which provides a great resistance to demanding working conditions and pressures. The seat is held by means of two stainless steel rings. This design provides watertightness in both directions while avoiding any buildup of solids that could prevent the valve from closing. The seat can be supplied in different resilient material qualities.

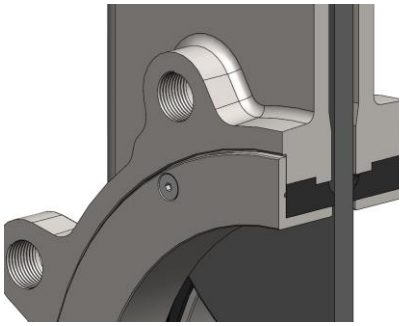

## ATEX

Please contact our ORBINOX representative for info and availability. Some considerations:
• Hand operated BT (SER.22) valves have been subjected to an ignition risk assessment according to DIN EN 13463: 1-5 and they are out of the scope of application of ATEX Directive. Therefore hand operated valves are suitable for ALL ATEX zones.
• Electrically, pneumatically and hydraulically operated valves must be subjected to a conformity assessment of their own and also of the whole of unit valve-actuator to get EC Type Approval to Directive 2014/34.

# MODEL BT SERIES 22

ORBINOX
VALVE SOLUTIONS IN MORE THAN 70 COUNTRIES

## HAND OPERATED (Rising stem)

HANDWHEEL

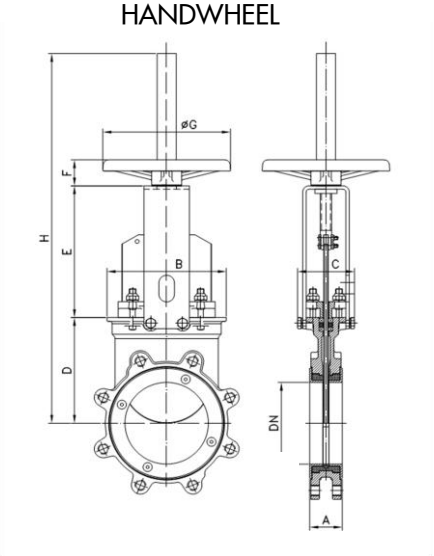


GEAR

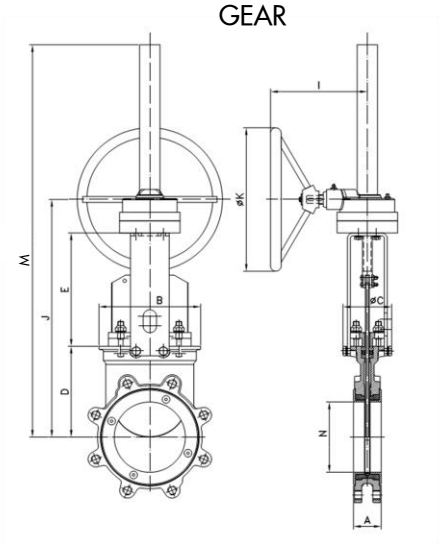


- Standard handwheel actuator. Available from DN 2"/50mm to DN 24"/600mm
- Consists of:
  - Handwheel: Ductile iron
  - Stem
  - Stem nut
  - Yoke
- Options (on request):
  - Chainwheel
  - Locking Device
  - Extensions

- Gear is optional above DN 6"/150mm and recommended above 12"/300mm
- Consists of:
  - Stem
  - Yoke
  - Bevel Gear Actuator with Handwheel (Standard Ratio 4:1)
- Options (on request):
  - Chainwheel
  - Locking Device
  - Extensions

| DN (”/mm) | N | A | B | C | D | E | F | J | ØG | ØK | H | I | M |
|---|---|---|---|---|---|---|---|---|---|---|---|---|---|
| 2”/50 | 2/50 | 1,88/47,8 | 4,92/125 | 4,13/105 | 4,13/105 | 5,07/129 | 1,85/47 | - | 8,86/225 | - | 16,92/430 | - | - |
| 3”/80 | 2,9/75 | 2/50,8 | 6,06/154 | 4,13/105 | 4,68/119 | 6,37/162 | 1,85/47 | - | 8,86/225 | - | 18,70/475 | - | - |
| 4”/100 | 3,8/97 | 2/50,8 | 6,88/175 | 4,13/105 | 5,59/142 | 7,36/187 | 1,85/47 | - | 8,86/225 | - | 20,66/525 | - | - |
| 5”/125 | 4,76/121 | 2,25/57,2 | 7,08/180 | 4,13/105 | 6,49/165 | 8,30/211 | 1,85/47 | - | 8,86/225 | - | 24,40/620 | - | - |
| 6”/150 | 5,78/147 | 2,25/57,2 | 8,46/215 | 4,13/105 | 7,48/190 | 9,33/237 | 1,85/47 | - | 8,86/225 | - | 26,37/670 | - | - |
| 8”/200 | 7,63/194 | 2,74/69,8 | 10,23/260 | 4,80/122 | 9,44/240 | 12,16/309 | 2,63/67 | 24,37/619 | 12,20/310 | 12/300 | 40,51/1029 | 7,87/200 | 40,51/1029 |
| 10”/250 | 9,4/239 | 2,74/69,8 | 13,33/338 | 4,80/122 | 11,41/290 | 13,54/344 | 2,63/67 | 27,67/703 | 12,20/310 | 12/300 | 43,81/1113 | 7,87/200 | 43,82/1113 |
| 12”/300 | 11,18/284 | 3/76,2 | 14,40/366 | 4,80/122 | 14,17/360 | 15,43/392 | 2,60/66 | 32,36/822 | 16,14/410 | 12/300 | 48,62/1235 | 7,87/200 | 48,62/1235 |
| 14”/350 | 12,67/322 | 3/76,2 | 16/400 | 7,75/197 | 12,60/320 | 17,52/445 | 2,60/66 | 32,09/815 | 16,14/410 | 17,72/450 | 50,78/1290 | 10,62/270 | 63,38/1610 |
| 16”/400 | 14,40/366 | 3,50/89 | 18,03/458 | 7,75/197 | 14,49/368 | 19,80/503 | 2,60/66 | 35,75/908 | 16,14/410 | 17,72/450 | 54,92/1395 | 10,62/270 | 67,72/1720 |
| 18”/450 | 15,74/400 | 3,50/89 | 19,25/489 | 7,75/197 | 16,34/415 | 21,14/537 | 2,63/67 | 38,82/986 | 21,65/550 | 17,72/450 | 62,20/1580 | 10,62/270 | 70,87/1800 |
| 20”/500 | 18,11/460 | 4,50/114,2 | 21,73/552 | 7,75/197 | 18,11/460 | 23,82/605 | 2,63/67 | 42,87/1089 | 21,65/550 | 17,72/450 | 66,53/1690 | 10,62/270 | 74,61/1895 |
| 24”/600 | 20,86/530 | 4,50/114,2 | 25,07/637 | 7,75/197 | 20,12/511 | 26,10/663 | 2,63/67 | 48,03/1220 | 21,65/550 | 17,72/450 | 75,39/1915 | 10,62/270 | 80,31/2040 |
| 30”/ 750 | 26,37/670 | 4,6/117 | 33,14/842 | 12,59/320 | 26,37/670 | 37,2/945 | - | 64,17/1630 | - | 17,72/450 | - | 12,2/310 | 105,11/2670 |
| 36”/900 | 31,88/810 | 4,6/117 | 38,18/970 | 12,59/320 | 31,49/800 | 44,01/1418 | - | 77,44/1967 | - | 25,5/650 | - | 14,56/370 | 126,29/3208 |

Reserves the right to change specifications without notice



ORBINOX CANADA, ORBINOX USA, ORBINOX BRAZIL, ORBINOX CHILE, ORBINOX PERU, ORBINOX SPAIN, ORBINOX UK, ORBINOX FRANCE, ORBINOX GERMANY, ORBINOX INDIA, ORBINOX CHINA, ORBINOX S.E.A.
www.orbinox.com

# MODEL BT SERIES 22

ORBINOX
VALVE SOLUTIONS IN MORE THAN 70 COUNTRIES

## HAND OPERATED (Non-rising stem)

### HANDWHEEL

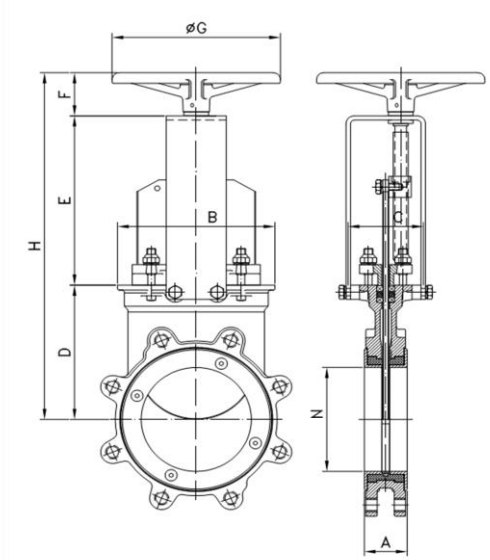


- Standard handwheel actuator. Available from DN 2"/50mm to DN 24"/600mm
- Consists of:
  - Handwheel: Ductile iron
  - Stem
  - Yoke
- Options (on request):
  - Chainwheel
  - Locking Device
  - Extensions

### GEAR

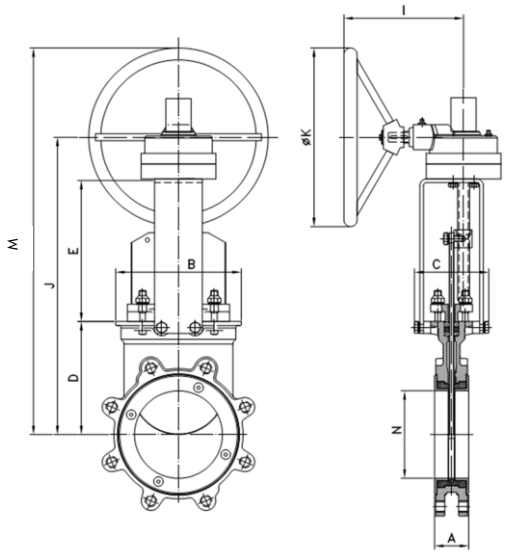


- Gear is optional above DN 6"/150mm and recommended above 12"/300mm
- Consists of:
  - Yoke
  - Stem
  - Bevel Gear Actuator with Handwheel (Standard Ratio 4:1)
- Options (on request):
  - Chainwheel
  - Locking Device
  - Extensions

| DN ("/mm) | N | A | B | C | D | E | F | J | ØG | ØK | H | M | I |
|---|---|---|---|---|---|---|---|---|---|---|---|---|---|
| 2"/50 | 2/50 | 1,88/47,8 | 4,92/125 | 4,88/124 | 4,13/105 | 5,14/132 | 2,38/61 | - | 8,86/225 | - | 11,62/298 | - | - |
| 3"/80 | 2,9/75 | 2/50,8 | 6,06/154 | 4,88/124 | 4,68/119 | 6,43/165 | 2,38/61 | - | 8,86/225 | - | 13,45/345 | - | - |
| 4"/100 | 3,8/97 | 2/50,8 | 6,88/175 | 4,88/124 | 5,59/142 | 7,41/190 | 2,38/61 | - | 8,86/225 | - | 15,47/393 | - | - |
| 5"/125 | 4,76/121 | 2,25/57,2 | 7,08/180 | 4,88/124 | 6,49/165 | 8,35/214 | 2,38/61 | - | 8,86/225 | - | 17,32/440 | - | - |
| 6"/150 | 5,78/147 | 2,25/57,2 | 8,46/215 | 4,88/124 | 7,48/190 | 9,36/240 | 2,38/61 | - | 8,86/225 | - | 19,33/491 | - | - |
| 8"/200 | 7,63/194 | 2,74/69,8 | 10,23/260 | 5,59/142 | 9,44/240 | 12,28/312 | 2,38/61 | 24,48/622 | 12,20/310 | 12/300 | 24,13/613 | 30,51/775 | 7,87/200 |
| 10"/250 | 9,4/239 | 2,74/69,8 | 13,33/338 | 5,59/142 | 11,41/290 | 13,66/347 | 2,38/61 | 28,38/721 | 12,20/310 | 12/300 | 27,48/698 | 34,29/871 | 7,87/200 |
| 12"/300 | 11,18/284 | 3/76,2 | 14,40/366 | 5,59/142 | 14,17/360 | 15,55/395 | 2,77/71 | 33,07/840 | 16,14/410 | 12/300 | 32,52/826 | 38,97/990 | 7,87/200 |
| 14"/350 | 12,67/322 | 3/76,2 | 16/400 | 7,75/197 | 12,60/320 | 18,9/482 | 4,33/110 | 34,88/886 | 16,14/410 | 12/300 | 35,9/912 | 40,78/1036 | 8,54/217 |
| 16"/400 | 14,40/366 | 3,50/89 | 18,03/458 | 7,75/197 | 14,49/368 | 20,74/527 | 4,33/110 | 38,5/978 | 16,14/410 | 17,72/450 | 39,56/1005 | 47,36/1203 | 8,54/217 |
| 18"/450 | 15,74/400 | 3,50/89 | 19,25/489 | 7,91/201 | 16,34/415 | 22,16/563 | 4,37/111 | 41,81/1062 | 21,65/550 | 17,72/450 | 42,87/1089 | 50,66/1287 | 8,54/217 |
| 20"/500 | 18,11/460 | 4,50/114,2 | 21,73/552 | 7,91/201 | 18,11/460 | 25,39/645 | 4,37/111 | 47,5/1207 | 21,65/550 | 17,72/450 | 47,87/1216 | 56,37/1432 | 11,33/288 |
| 24"/600 | 20,86/530 | 4,50/114,2 | 25,07/637 | 7,91/201 | 20,12/511 | 27,49/711 | 4,37/111 | 52,12/1324 | 21,65/550 | 17,72/450 | 52,48/1333 | 64,92/1649 | 11,33/288 |
| 30"/ 750 | 26,37/670 | 4,6/117 | 33,14/842 | 12,59/320 | 26,37/670 | 34,44/875 | - | 65,23/1657 | - | 17,72/450 | - | 76,06/1932 | 12,2/310 |
| 36"/900 | 31,88/810 | 4,6/117 | 38,18/970 | 12,59/320 | 31,49/800 | 40,55/1030 | - | 76,06/1932 | - | 25,59/650 | - | 88,85/2257 | 14,56/370 |

# MODEL BT SERIES 22

ORBINOX
VALVE SOLUTIONS IN MORE THAN 70 COUNTRIES

## PNEUMATIC CYLINDER

- The standard pneumatic actuator (double acting on-off cylinder) consists of:
  - Ø ≤ 12"/300mm: Aluminum barrels
  - Ø ≥ 14"/350mm: Composite barrels
  - Aluminum end covers
  - Stainless Steel (AISI 304) piston rod
  - Nitrile coated steel piston

- Available from DN 2"/50mm to DN 36"/900mm

- Air supply pressure: Actuator is sized considering 90 psi / 6 bar

- For valves installed in a horizontal position, we recommend U-type support plates and/or actuator support

- Options (on request):
  - Hard anodized barrel and covers
  - Stainless Steel barrel and covers
  - Over / Undersized cylinder
  - Manual override
  - Fail safe systems
  - Limit switches

- Instrumentation (on request):
  - Positioners
  - Solenoid valves
  - Flow regulators
  - Air preparation units

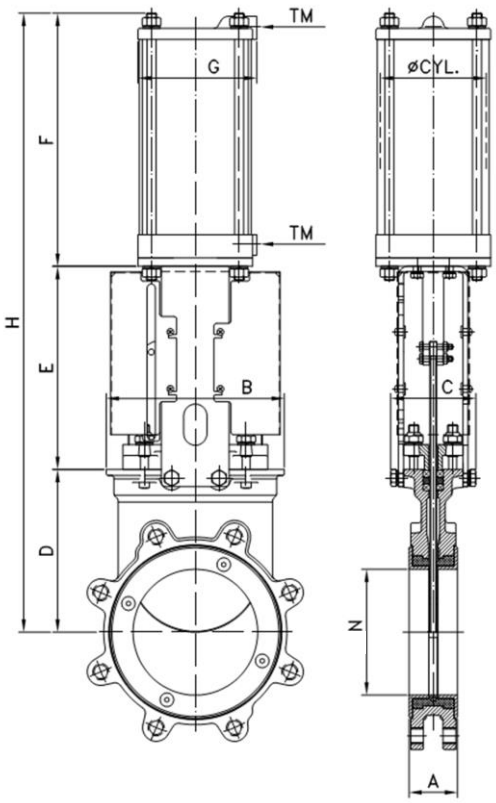


| DN (”/mm) | N | A | B | C | D | E | F | G | H | Standard Cyl | TM |
|---|---|---|---|---|---|---|---|---|---|---|---|
| 2”/50 | 2/50 | 1,88/47,8 | 4,92/125 | 4,13/105 | 4,13/105 | 5,07/129 | 7,00/178 | 4,52/115 | 16,22/412 | C4”-2,44”/(100-62) | ¼” G |
| 3”/80 | 2,9/75 | 2/50,8 | 6,06/154 | 4,13/105 | 4,68/119 | 6,37/162 | 8,31/211 | 4,52/115 | 19,37/492 | C4”-3,74”/(100-95) | ¼” G |
| 4”/100 | 3,8/97 | 2/50,8 | 6,88/175 | 4,13/105 | 5,59/142 | 7,36/187 | 9,09/231 | 4,52/115 | 22,04/560 | C4”-4,52”/(100-115) | ¼” G |
| 5”/125 | 4,76/121 | 2,25/57,2 | 7,08/180 | 4,13/105 | 6,49/165 | 8,30/211 | 10,67/271 | 5,51/140 | 25,47/647 | C5”-5,63”/(125-143) | ¼” G |
| 6”/150 | 5,78/147 | 2,25/57,2 | 8,46/215 | 4,13/105 | 7,48/190 | 9,33/237 | 11,65/296 | 5,51/140 | 28,46/723 | C5”-6,61”/(125-168) | ¼” G |
| 8”/200 | 7,63/194 | 2,74/69,8 | 10,23/260 | 4,80/122 | 9,44/240 | 12,16/309 | 14,09/358 | 6,88/175 | 35,70/907 | C6.30”-8,66”/(160-220) | ¼” G |
| 10”/250 | 9,4/239 | 2,74/69,8 | 13,33/338 | 4,80/122 | 11,41/290 | 13,58/345 | 16,93/430 | 8,66/220 | 41,92/1065 | C8”-10,63”/(200-270) | 3/8” G |
| 12”/300 | 11,18/284 | 3/76,2 | 14,40/366 | 4,80/122 | 14,17/360 | 15,47/393 | 18,89/480 | 8,66/220 | 48,54/1233 | C8”-12,60”/(200-320) | 3/8” G |
| 14”/350 | 12,67/322 | 3/76,2 | 16/400 | 7,75/197 | 12,60/320 | 18,07/459 | 21,61/549 | 10,90/277 | 52,28/1328 | C10”-14,76”/(250-375) | 3/8” G |
| 16”/400 | 14,40/366 | 3,50/89 | 18,03/458 | 7,75/197 | 14,49/368 | 20,31/516 | 21,61/549 | 10,90/277 | 56,42/1433 | C10”-16,73”/(250-425) | 3/8” G |
| 18”/450 | 15,74/400 | 3,50/89 | 19,25/489 | 10,62/270 | 16,34/415 | 21,61/549 | 26,77/680 | 15,04/382 | 64,72/1644 | C12”-18,70”/(300-475) | ½”G |
| 20”/500 | 18,11/460 | 4,50/114,2 | 21,73/552 | 10,62/270 | 18,11/460 | 24,21/615 | 26,77/680 | 15,04/382 | 69,09/1755 | C12”-20,67”/(300-525) | ½”G |
| 24”/600 | 20,86/530 | 4,50/114,2 | 25,07/637 | 10,62/270 | 20,12/511 | 27,04/687 | 32,67/830 | 15,04/382 | 79,84/2028 | C12”-24,60”/(300-625) | ½”G |
| 30”/ 750 | 26,37/670 | 4,6/117 | 33,14/842 | 12,59/320 | 26,37/670 | 37/940 | 38,77/985 | 17,48/444 | 102,16/2595 | C14”-30,71”/(350-780) | ¼” G |
| 36”/900 | 31,88/810 | 4,6/117 | 38,18/970 | 12,59/320 | 31,49/800 | 43,3/1100 | 47,32/1202 | 20,27/515 | 122,12/3102 | C16”-36,61”/(400-930) | ¼” G |

# MODEL BT SERIES 22

ORBINOX
VALVE SOLUTIONS IN MORE THAN 70 COUNTRIES

## ELECTRIC ACTUATOR (Rising stem)

- Consists of:
  - Electric motor
  - Rising stem
  - Motor support yoke
    (Acc. to ISO 5210/DIN 3338)
- The standard electric motor is equipped with:
  - Manual emergency operation
  - Limit switches (open/closed)
  - Torque switches
- Available from DN 2"/50mm to DN 36"/900mm
- Wide range of types and makes available to meet customer's needs.

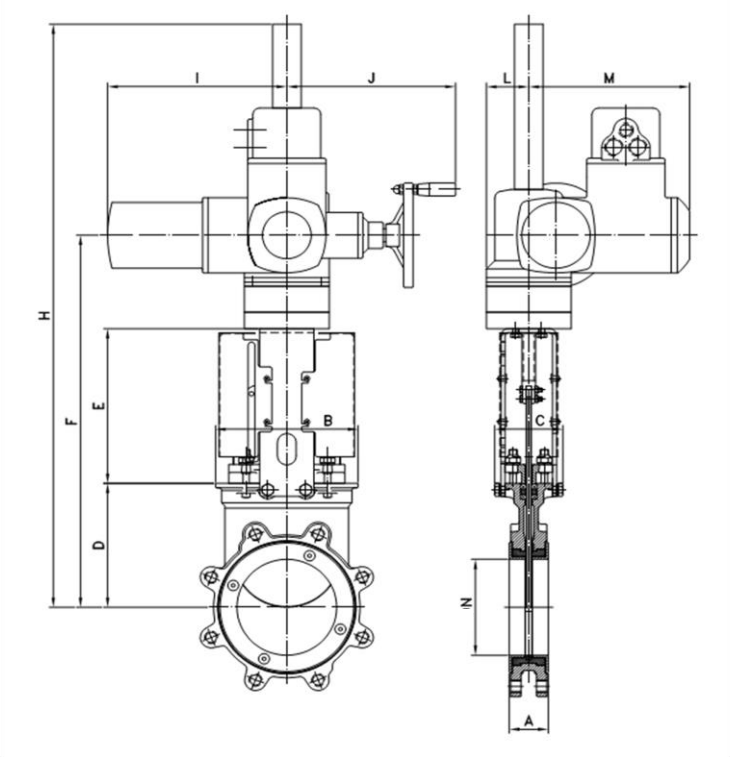


| DN ("/mm) | N | A | B | C | D | E | F | ØG | H | I | J | L | M | StemØ x pitch | Torque (ft.LBS/Nm) |
|---|---|---|---|---|---|---|---|---|---|---|---|---|---|---|---|
| 2"/50 | 2"/50 | 1,88/47,8 | 4,92/125 | 4,13/105 | 4,13/105 | 5,07/129 | 14,84/377 | 6,30/160 | 17,87/454 | 10,43/265 | 9,80/249 | 2,44/62 | 9,33/237 | 0.79 x 0.16/20 x 4 | 7.4/10 |
| 3"/80 | 2,9"/75 | 2/50,8 | 6,06/154 | 4,13/105 | 4,68/119 | 6,37/162 | 16,70/424 | 6,30/160 | 19,72/501 | 10,43/265 | 9,80/249 | 2,44/62 | 9,33/237 | 0.79 x 0.16/20 x 4 | 7.4/10 |
| 4"/100 | 3,8"/97 | 2/50,8 | 6,88/175 | 4,13/105 | 5,59/142 | 7,36/187 | 18,58/472 | 6,30/160 | 21,61/549 | 10,43/265 | 9,80/249 | 2,44/62 | 9,33/237 | 0.79 x 0.16/20 x 4 | 7.4/10 |
| 5"/125 | 4,76"/121 | 2,25/57,2 | 7,08/180 | 4,13/105 | 6,49/165 | 8,30/211 | 20,43/519 | 6,30/160 | 23,46/596 | 10,43/265 | 9,80/249 | 2,44/62 | 9,33/237 | 0.79 x 0.16/20 x 4 | 11.1/15 |
| 6"/150 | 5,78"/147 | 2,25/57,2 | 8,46/215 | 4,13/105 | 7,48/190 | 9,33/237 | 22,44/570 | 6,30/160 | 45,15/1147 | 10,43/265 | 9,80/249 | 2,44/62 | 9,33/237 | 0.79 x 0.16/20 x 4 | 14.8/20 |
| 8"/200 | 7,63"/194 | 2,74/69,8 | 10,23/260 | 4,80/122 | 9,44/240 | 12,16/309 | 27,71/704 | 6,30/160 | 50,86/1292 | 10,43/265 | 9,80/249 | 2,44/62 | 9,33/237 | 0.98 x 0.2/25 x 5 | 22.2/30 |
| 10"/250 | 9,4"/239 | 2,74/69,8 | 13,33/338 | 4,80/122 | 11,41/290 | 13,58/345 | 31,10/790 | 6,30/160 | 54,25/1378 | 10,43/265 | 9,80/249 | 2,44/62 | 9,33/237 | 0.98 x 0.2/25 x 5 | 33.3/45 |
| 12"/300 | 11,18"/284 | 3/76,2 | 14,40/366 | 4,80/122 | 14,17/360 | 15,47/393 | 34,76/883 | 7,87/200 | 57,91/1471 | 11,10/282 | 10,08/256 | 2,55/65 | 9,72/247 | 0.98 x 0.2/25 x 5 | 51.8/70 |
| 14"/350 | 12,67"/322 | 3/76,2 | 16/400 | 7,75/197 | 12,60/320 | 18,07/459 | 35,79/909 | 7,87/200 | 58,94/1497 | 11,14/283 | 10/254 | 2,55/65 | 9,76/248 | 1.38 x 0.24/35 x 6 | 81.4/110 |
| 16"/400 | 14,40"/366 | 3,50/89 | 18,03/458 | 7,75/197 | 14,49/368 | 20,31/516 | 42,32/1075 | 12,40/315 | 70,98/1803 | 15,31/389 | 13,22/336 | 3,58/91 | 11,25/286 | 1.38 x 0.24/35 x 6 | 118.4/160 |
| 18"/450 | 15,74"/400 | 3,50/89 | 19,25/489 | 10,62/270 | 16,34/415 | 21,61/549 | 44,84/1139 | 12,40/315 | 73,50/1867 | 15,31/389 | 13,22/336 | 3,58/91 | 11,25/286 | 1.38 x 0.24/35 x 6 | 140.6/190 |
| 20"/500 | 18,11"/460 | 4,50/114,2 | 21,73/552 | 10,62/270 | 18,11/460 | 24,21/615 | 52/1321 | 15,74/400 | 80,67/2049 | 15,31/389 | 13,34/339 | 3,58/91 | 11,25/286 | 1.38 x 0.24/35 x 6 | 199.8/270 |
| 24"/600 | 20,86"/530 | 4,50/114,2 | 25,07/637 | 10,62/270 | 20,12/511 | 27,04/687 | 56,85/1444 | 15,74/400 | 85,51/2172 | 15,31/389 | 13,34/339 | 3,58/91 | 11,25/286 | 1.57 x 0.27/40 x 7 | 333/450 |
| 30"/ 750 | 26,37/670 | 4,6/117 | 33,14/842 | 12,59/320 | 26,37/670 | 37/940 | 71,65/1820 | 19,68/500 | 115,55/2935 | 16,92/430 | 14,37/365 | 4,6/117 | 11,92/303 | 1,96 X 0,31/50 X 8 | 407/550 |
| 36"/900 | 31,88/810 | 4,6/117 | 38,18/970 | 12,59/320 | 31,49/800 | 43,3/1100 | 74,8/1900 | 19,68/500 | 126,96/3225 | 16,92/430 | 14,37/365 | 4,6/117 | 11,92/303 | 2,36 X 0,35/60 X 9 | 629/850 |

# MODEL BT SERIES 22

ORBINOX
VALVE SOLUTIONS IN MORE THAN 70 COUNTRIES

## ELECTRIC ACTUATOR (Non-rising stem)

- Consists of:
  - Electric motor
  - Non-rising stem
  - Motor support yoke
    (Acc. to ISO 5210/DIN 3338)
- The standard electric motor is equiped with:
  - Manual emergency operation
  - Limit switches (open/closed)
  - Torque switches
- Available from DN 2"/50mm to DN 36"/900mm
- Wide range of types and makes available to meet customer's needs

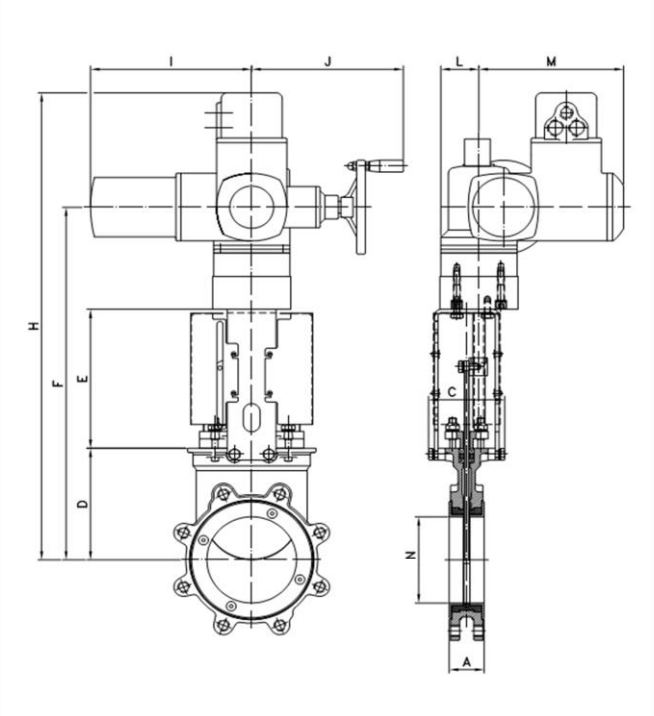


| DN ("/mm) | N | A | B | C | D | E | F | ØG | H | I | J | L | M | StemØ x pitch | Torque (ft.LBS/Nm) |
|---|---|---|---|---|---|---|---|---|---|---|---|---|---|---|---|
| 2"/50 | 2/50 | 1,88/47,8 | 4,92/125 | 4,13/105 | 4,13/105 | 5,07/129 | 14,84/377 | 6,30/160 | 21,33/547 | 10,43/265 | 9,80/249 | 2,44/62 | 9,33/237 | 0.79 x 0.16/20 x 4 | 7.4/10 |
| 3"/80 | 2,9/75 | 2/50,8 | 6,06/154 | 4,13/105 | 4,68/119 | 6,37/162 | 16,70/424 | 6,30/160 | 23,17/594 | 10,43/265 | 9,80/249 | 2,44/62 | 9,33/237 | 0.79 x 0.16/20 x 4 | 7.4/10 |
| 4"/100 | 3,8/97 | 2/50,8 | 6,88/175 | 4,13/105 | 5,59/142 | 7,36/187 | 18,58/472 | 6,30/160 | 25,27/642 | 10,43/265 | 9,80/249 | 2,44/62 | 9,33/237 | 0.79 x 0.16/20 x 4 | 7.4/10 |
| 5"/125 | 4,7"/121 | 2,25/57,2 | 7,08/180 | 4,13/105 | 6,49/165 | 8,30/211 | 20,43/519 | 6,30/160 | 27,16/690 | 10,43/265 | 9,80/249 | 2,44/62 | 9,33/237 | 0.79 x 0.16/20 x 4 | 11.1/15 |
| 6"/150 | 5,78/147 | 2,25/57,2 | 8,46/215 | 4,13/105 | 7,48/190 | 9,33/237 | 22,44/570 | 6,30/160 | 29,13/740 | 10,43/265 | 9,80/249 | 2,44/62 | 9,33/237 | 0.79 x 0.16/20 x 4 | 14.8/20 |
| 8"/200 | 7,63/194 | 2,74/69,8 | 10,23/260 | 4,80/122 | 9,44/240 | 12,16/309 | 27,71/704 | 6,30/160 | 34,44/875 | 10,43/265 | 9,80/249 | 2,44/62 | 9,33/237 | 0.98 x 0.2/25 x 5 | 22.2/30 |
| 10"/250 | 9,4/239 | 2,74/69,8 | 13,33/338 | 4,80/122 | 11,41/290 | 13,58/345 | 31,10/790 | 6,30/160 | 37,79/960 | 10,43/265 | 9,80/249 | 2,44/62 | 9,33/237 | 0.98 x 0.2/25 x 5 | 33.3/45 |
| 12"/300 | 11,18/284 | 3/76,2 | 14,40/366 | 4,80/122 | 14,17/360 | 15,47/393 | 34,76/883 | 7,87/200 | 41,45/1053 | 11,10/282 | 10,08/256 | 2,55/65 | 9,72/247 | 0.98 x 0.2/25 x 5 | 51.8/70 |
| 14"/350 | 12,67/322 | 3/76,2 | 16/400 | 7,75/197 | 12,60/320 | 18,07/459 | 35,79/909 | 7,87/200 | 42,48/1079 | 11,14/283 | 10/254 | 2,55/65 | 9,76/248 | 1.38 x 0.24/35 x 6 | 81.4/110 |
| 16"/400 | 14,40/366 | 3,50/89 | 18,03/458 | 7,75/197 | 14,49/368 | 20,31/516 | 42,32/1075 | 12,40/315 | 49,01/1245 | 15,31/389 | 13,22/336 | 3,58/91 | 11,25/286 | 1.38 x 0.24/35 x 6 | 118.4/160 |
| 18"/450 | 15,74/400 | 3,50/89 | 19,25/489 | 10,62/270 | 16,34/415 | 21,61/549 | 44,84/1139 | 12,40/315 | 51,53/1309 | 15,31/389 | 13,22/336 | 3,58/91 | 11,25/286 | 1.38 x 0.24/35 x 6 | 140.6/190 |
| 20"/500 | 18,11/460 | 4,50/114,2 | 21,73/552 | 10,62/270 | 18,11/460 | 24,21/615 | 52/1321 | 15,74/400 | 58,70/1491 | 15,31/389 | 13,34/339 | 3,58/91 | 11,25/286 | 1.38 x 0.24/35 x 6 | 199.8/270 |
| 24"/600 | 20,86/530 | 4,50/114,2 | 25,07/637 | 10,62/270 | 20,12/511 | 27,04/687 | 56,85/1444 | 15,74/400 | 63,54/1614 | 15,31/389 | 13,34/339 | 3,58/91 | 11,25/286 | 1.57 x 0.27/40 x 7 | 333/450 |
| 30"/ 750 | 26,37/670 | 4,6/117 | 33,14/842 | 12,59/320 | 26,37/670 | 37/940 | 71,65/1820 | 19,68/500 | 78,43/2005 | 16,92/430 | 14,37/365 | 4,6/117 | 11,92/303 | 1,96 X 0,31/50 X 8 | 407/550 |
| 36"/900 | 31,88/810 | 4,6/117 | 38,18/970 | 12,59/320 | 31,49/800 | 43,3/1100 | 74,80/1900 | 19,68/500 | 40,35/2295 | 16,92/430 | 14,37/365 | 4,6/117 | 11,92/303 | 2,36 X 0,35/60 X 9 | 629/850 |

ORBINOX
VALVE SOLUTIONS IN MORE THAN 70 COUNTRIES

# FLANGE AND BOLTING DETAILS

## ANSI B16.5 / B16.47, class 150

| DN | K | Nº | M | T | ⌖ ⌖ |
|---|---|---|---|---|---|
| 2″ | 4 ¾″ | 4 | 5/8″ - 11 UNC | 7/16″ | 2 - 2 |
| 3″ | 6″ | 4 | 5/8″ - 11 UNC | 11/32″ | 2 - 2 |
| 4″ | 7 ½″ | 8 | 5/8″ - 11 UNC | 11/32″ | 2 - 6 |
| 5″ | 8 ½″ | 8 | 3/4″ -10 UNC | 3/8″ | 2 - 6 |
| 6″ | 9 ½″ | 8 | 3/4″ -10 UNC | 3/8″ | 2 - 6 |
| 8″ | 11 ¾″ | 8 | 3/4″ -10 UNC | 7/16″ | 2 - 6 |
| 10″ | 14 ¼″ | 12 | 7/8″ - 9 UNC | 18/32″ | 4 - 8 |
| 12″ | 17″ | 12 | 7/8″ - 9 UNC | 18/32″ | 4 - 8 |
| 14″ | 18 ¾″ | 12 | 1″ - 8 UNC | ½″ | 4 - 8 |
| 16″ | 21 ¼″ | 16 | 1″ - 8 UNC | ½″ | 4 - 12 |
| 18″ | 22 ¾″ | 16 | 1 1/8″ - 7 UNC | 18/32″ | 6 - 10 |
| 20″ | 25″ | 20 | 1 1/8″ - 7 UNC | 1″ | 6 - 14 |
| 24″ | 29 ½″ | 20 | 1 1/4″ - 7 UNC | 7/8″ | 6 - 14 |
| 30″ | 36″ | 28 | 1 1/4″ - 7 UNC | 1 1/8″ | 10 - 18 |
| 36″ | 42 ¾″ | 32 | 1 1/2″ - 6 UNC | 1 ¼″ | 10 - 22 |

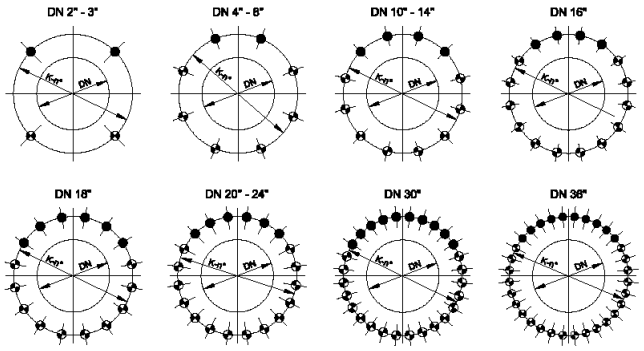


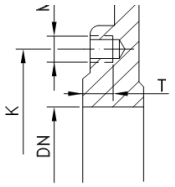


BLIND TAPPED HOLES

TAPPED THROUGH

## EN 1092-2 PN10

| DN | K | Nº | M | T | ⌖ ⌖ |
|---|---|---|---|---|---|
| 50 | 125 | 4 | M-16 | 11 | 2 - 2 |
| 80 | 160 | 8 | M-16 | 9 | 2 - 6 |
| 100 | 180 | 8 | M-16 | 9 | 2 - 6 |
| 125 | 210 | 8 | M-16 | 10 | 2 - 6 |
| 150 | 240 | 8 | M-20 | 10 | 2 - 6 |
| 200 | 295 | 8 | M-20 | 12 | 2 - 6 |
| 250 | 350 | 12 | M-20 | 14 | 4 - 8 |
| 300 | 400 | 12 | M-20 | 14 | 4 - 8 |
| 350 | 460 | 16 | M-20 | 14 | 6 - 10 |
| 400 | 515 | 16 | M-24 | 14 | 4 - 12 |
| 450 | 565 | 20 | M-24 | 17 | 6 - 14 |
| 500 | 620 | 20 | M-24 | 24 | 6 - 14 |
| 600 | 725 | 20 | M-27 | 22 | 6 - 14 |
| 900 | 1050 | 28 | M-30 | 32 | 10 - 18 |

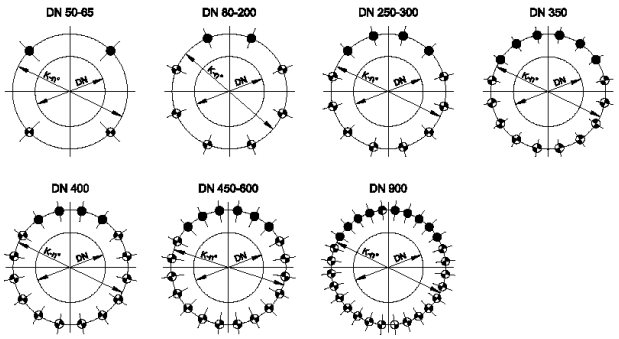

# BT (SER.22) KNIFE GATE VALVE

ORBINOX
VALVE SOLUTIONS IN MORE THAN 70 COUNTRIES

The BT (SER.22) model knife gate is a bi-directional lug type valve designed according to MSS-SP-81 and TAPPI TIS 405-8 for general industrial service applications. The innovative design of the body and seat assures non-clogging shut off on suspended solids in industries such as Pulp and Paper, Wastewater Treatment Plants, Food and Beverage, Power Plants, Mining, Chemical Plants, etc.

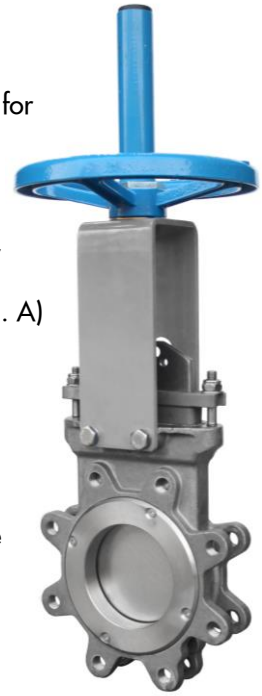

**Product description:**

- Bi-directional lug type knife gate valve
- Size range of DN 2"/50mm - 36"/900mm (larger sizes upon request). See Dimension Charts for pressure rating
- Rising stem as standard. Non-rising stem also available
- Standard flange connection: B16.5 (class 150). Others available upon request
- Manual (handwheel, chainwheel, lever and bevel gear), pneumatic (single and double-acting), electric and hydraulic actuation options available
- Directives: 2006/42/EC (MACHINES), 2014/68/EU (PED), Fluid: Group 1(b), 2 (Cat. I. mod. A) and 2014/34/EU (ATEX)

**Features:**

- Lug type one piece cast stainless steel body
- Port design as per MSS SP-81 and TAPPI TIS 405-8 standards
- Stainless steel gate polished both sides to avoid jamming and seat damage
- Resilient seat (patented) with a new design sleeve. Two stainless steel seat rings keep the sleeve in position and also serve to guide the gate
- Long life PTFE impregnated synthetic fibre plus EPDM o-ring packing with easy access and adjustable gland follower. Wide range of packing materials available
- RAL-5015 blue epoxy-coating on all cast iron/carbon steel components
- Automated valves provided with gate guards in accordance with EU Safety Standards
- Other options: bonnets, V-ports, special materials, fabricated valves, etc.
- Actuation accessories: limit & proximity switches, mechanical stops, positioners, solenoid valves, manual overrides, locking devices, fail safe systems, stem extensions and floor stands

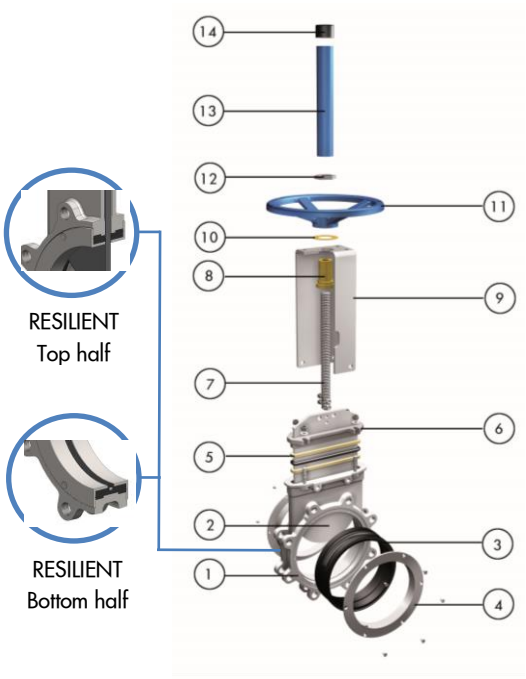


**STANDARD PARTS LIST**

| | Part: | Stainless steel: |
|---|---|---|
| 1 | Body | CF8M / CF8 |
| 2 | Gate | AISI 316 / AISI 304 |
| 3 | Sleeve | EPDM |
| 4 | Seat Ring | CF8M / CF8 |
| 5 | Packing | PTFE impreg. synth. fibre + EPDM O-Ring |
| 6 | Gland Follower | CF8M / CF8 |
| 7 | Stem | Stainless Steel |
| 8 | Stem Nut | Brass |
| 9 | Yoke | AISI 304 / Carbon steel - Epoxy coated |
| 10 | Thrust Washer | Brass |
| 11 | Handwheel | Ductile iron |
| 12 | Nut | Zinc plated carbon steel |
| 13 | Stem Protector | Carbon steel - Epoxy coated |
| 14 | Cap | Plastic |

# BT(SER.22) KNIFE GATE VALVE

ORBINOX
VALVE SOLUTIONS IN MORE THAN 70 COUNTRIES

## DIMENSIONS (inch/mm) Handwheel Rising Stem

| DN "/mm | N | Pressures | A | B | C | D | E | F | ØG | H |
|---|---|---|---|---|---|---|---|---|---|---|
| 2"/50 | 2/50 | 10 bar | 1,88/47,8 | 4,92/125 | 4,13/105 | 4,13/105 | 5,07/129 | 1,85/47 | 8,86/225 | 16,92/430 |
| 3"/80 | 2,9/75 | 10 bar | 2/50,8 | 6,06/154 | 4,13/105 | 4,68/119 | 6,37/162 | 1,85/47 | 8,86/225 | 18,70/475 |
| 4"/100 | 3,8/97 | 10 bar | 2/50,8 | 6,88/175 | 4,13/105 | 5,59/142 | 7,36/187 | 1,85/47 | 8,86/225 | 20,66/525 |
| 5"/125 | 4,76/121 | 10 bar | 2,25/57,2 | 7,08/180 | 4,13/105 | 6,49/165 | 8,30/211 | 1,85/47 | 8,86/225 | 24,40/620 |
| 6"/150 | 5,78/147 | 10 bar | 2,25/57,2 | 8,46/215 | 4,13/105 | 7,48/190 | 9,33/237 | 1,85/47 | 8,86/225 | 26,37/670 |
| 8"/200 | 7,63/194 | 10 bar | 2,74/69,8 | 10,23/260 | 4,80/122 | 9,44/240 | 12,16/309 | 2,63/67 | 12,20/310 | 40,51/1029 |
| 10"/250 | 9,4/239 | 10 bar | 2,74/69,8 | 13,33/338 | 4,80/122 | 11,41/290 | 13,54/344 | 2,63/67 | 12,20/310 | 43,81/1113 |
| 12"/300 | 11,18/284 | 10 bar | 3/76,2 | 14,40/366 | 4,80/122 | 14,17/360 | 15,43/392 | 2,60/66 | 16,14/410 | 48,62/1235 |
| 14"/350 | 12,67/322 | 10 bar | 3/76,2 | 16/400 | 7,75/197 | 12,60/320 | 17,52/445 | 2,60/66 | 16,14/410 | 50,78/1290 |
| 16"/400 | 14,40/366 | 10 bar | 3,50/89 | 18,03/458 | 7,75/197 | 14,49/368 | 19,80/503 | 2,60/66 | 16,14/410 | 54,92/1395 |
| 18"/450 | 15,74/400 | 10 bar | 3,50/89 | 19,25/489 | 7,75/197 | 16,34/415 | 21,14/537 | 2,63/67 | 21,65/550 | 62,20/1580 |
| 20"/500 | 18,11/460 | 10 bar | 4,50/114,2 | 21,73/552 | 7,75/197 | 18,11/460 | 23,82/605 | 2,63/67 | 21,65/550 | 66,53/1690 |
| 24"/600 | 20,86/530 | 10 bar | 4,50/114,2 | 25,07/637 | 7,75/197 | 20,12/511 | 26,10/663 | 2,63/67 | 21,65/550 | 75,39/1915 |

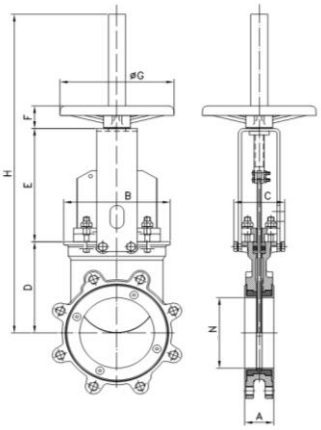


## DIMENSIONS (inch/mm) Pneumatic Actuator (D/A)

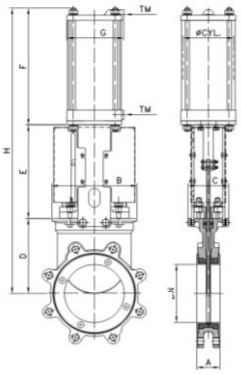


| DN "/mm | N | Pressures | A | B | C | D | E | F | G | H | Standard Cyl. | TM |
|---|---|---|---|---|---|---|---|---|---|---|---|---|
| 2"/50 | 2/50 | 10 bar | 1,88/47,8 | 4,92/125 | 4,13/105 | 4,13/105 | 5,07/129 | 7,00/178 | 4,52/115 | 16,22/412 | C4"-2.44"/(100-62) | ¼" G |
| 3"/80 | 2,9/75 | 10 bar | 2/50,8 | 6,06/154 | 4,13/105 | 4,68/119 | 6,37/162 | 8,31/211 | 4,52/115 | 19,37/492 | C4"-3,74"/(100-95) | ¼" G |
| 4"/100 | 3,8/97 | 10 bar | 2/50,8 | 6,88/175 | 4,13/105 | 5,59/142 | 7,36/187 | 9,09/231 | 4,52/115 | 22,04/560 | C4"-4,52"/(100-115) | ¼" G |
| 5"/125 | 4,76/121 | 10 bar | 2,25/57,2 | 7,08/180 | 4,13/105 | 6,49/165 | 8,30/211 | 10,67/271 | 5,51/140 | 25,47/647 | C5"-5,63"/(125-143) | ¼" G |
| 6"/150 | 5,78/147 | 10 bar | 2,25/57,2 | 8,46/215 | 4,13/105 | 7,48/190 | 9,33/237 | 11,65/296 | 5,51/140 | 28,46/723 | C5"-6,61"/(125-168) | ¼" G |
| 8"/200 | 7,63/194 | 10 bar | 2,74/69,8 | 10,23/260 | 4,80/122 | 9,44/240 | 12,16/309 | 14,09/358 | 6,88/175 | 35,70/907 | C6.30"-8,66"/(160-220) | ¼" G |
| 10"/250 | 9,4/239 | 10 bar | 2,74/69,8 | 13,33/338 | 4,80/122 | 11,41/290 | 13,58/345 | 16,93/430 | 8,66/220 | 41,92/1065 | C8"-10,63"/(200-270) | 3/8" G |
| 12"/300 | 11,18/284 | 10 bar | 3/76,2 | 14,40/366 | 4,80/122 | 14,17/360 | 15,47/393 | 18,89/480 | 8,66/220 | 48,54/1233 | C8"-12,60"/(200-320) | 3/8" G |
| 14"/350 | 12,67/322 | 10 bar | 3/76,2 | 16/400 | 7,75/197 | 12,60/320 | 18,07/459 | 21,61/549 | 10,90/277 | 52,28/1328 | C10"-14,76"/(250-375) | 3/8" G |
| 16"/400 | 14,40/366 | 10 bar | 3,50/89 | 18,03/458 | 7,75/197 | 14,49/368 | 20,31/516 | 21,61/549 | 10,90/277 | 56,42/1433 | C10"-16,73"/(250-425) | 3/8" G |
| 18"/450 | 15,74/400 | 10 bar | 3,50/89 | 19,25/489 | 10,62/270 | 16,34/415 | 21,61/549 | 26,77/680 | 15,04/382 | 64,72/1644 | C12"-18,70"/(300-475) | ½"G |
| 20"/500 | 18,11/460 | 10 bar | 4,50/114,2 | 21,73/552 | 10,62/270 | 18,11/460 | 24,21/615 | 26,77/680 | 15,04/382 | 69,09/1755 | C12"-20,67"/(300-525) | ½"G |
| 24"/600 | 20,86/530 | 10 bar | 4,50/114,2 | 25,07/637 | 10,62/270 | 20,12/511 | 27,04/687 | 32,67/830 | 15,04/382 | 79,84/2028 | C12"-24,60"/(300-625) | ½"G |
| 30"/750 | 26,37/670 | 7 bar | 4,6/117 | 33,14/842 | 12,59/320 | 26,37/670 | 37/940 | 38,77/985 | 17,48/444 | 102,16/2595 | C14"-30,71"/(350-780) | ¾" G |
| 36"/900 | 31,88/810 | 7 bar | 4,6/117 | 38,18/970 | 12,59/320 | 31,49/800 | 43,3/1100 | 47,32/1202 | 20,27/515 | 122,12/3102 | C16"-36,61"/(400-930) | ¾" G |

## DIMENSIONS (inch/mm) Electric Actuator Rising Stem

| DN "/mm | N | Pressures | A | B | C | D | E | F | ØG | H | I | J | L | M | StemØ x pich | Torque (ft.LBS/Nm) |
|---|---|---|---|---|---|---|---|---|---|---|---|---|---|---|---|---|
| 2"/50 | 2"/50 | 10 bar | 1,88/47,8 | 4,92/125 | 4,13/105 | 4,13/105 | 5,07/129 | 14,84/377 | 6,30/160 | 17,87/454 | 10,43/265 | 9,80/249 | 2,44/62 | 9,33/237 | 0.79 x 0.16/20 x 4 | 7.4/10 |
| 3"/80 | 2,9"/75 | 10 bar | 2/50,8 | 6,06/154 | 4,13/105 | 4,68/119 | 6,37/162 | 16,70/424 | 6,30/160 | 19,72/501 | 10,43/265 | 9,80/249 | 2,44/62 | 9,33/237 | 0.79 x 0.16/20 x 4 | 7.4/10 |
| 4"/100 | 3,8"/97 | 10 bar | 2/50,8 | 6,88/175 | 4,13/105 | 5,59/142 | 7,36/187 | 18,58/472 | 6,30/160 | 21,61/549 | 10,43/265 | 9,80/249 | 2,44/62 | 9,33/237 | 0.79 x 0.16/20 x 4 | 7.4/10 |
| 5"/125 | 4,76"/121 | 10 bar | 2,25/57,2 | 7,08/180 | 4,13/105 | 6,49/165 | 8,30/211 | 20,43/519 | 6,30/160 | 23,46/596 | 10,43/265 | 9,80/249 | 2,44/62 | 9,33/237 | 0.79 x 0.16/20 x 4 | 11.1/15 |
| 6"/150 | 5,78"/147 | 10 bar | 2,25/57,2 | 8,46/215 | 4,13/105 | 7,48/190 | 9,33/237 | 22,44/570 | 6,30/160 | 45,15/1147 | 10,43/265 | 9,80/249 | 2,44/62 | 9,33/237 | 0.79 x 0.16/20 x 4 | 14.8/20 |
| 8"/200 | 7,63"/194 | 10 bar | 2,74/69,8 | 10,23/260 | 4,80/122 | 9,44/240 | 12,16/309 | 27,71/704 | 6,30/160 | 50,86/1292 | 10,43/265 | 9,80/249 | 2,44/62 | 9,33/237 | 0.98 x 0.2/25 x 5 | 22.2/30 |
| 10"/250 | 9,4"/239 | 10 bar | 2,74/69,8 | 13,33/338 | 4,80/122 | 11,41/290 | 13,58/345 | 31,10/790 | 6,30/160 | 54,25/1378 | 10,43/265 | 9,80/249 | 2,44/62 | 9,33/237 | 0.98 x 0.2/25 x 5 | 33.3/45 |
| 12"/300 | 11,18"/284 | 10 bar | 3/76,2 | 14,40/366 | 4,80/122 | 14,17/360 | 15,47/393 | 34,76/883 | 7,87/200 | 57,91/1471 | 11,10/282 | 10,08/256 | 2,55/65 | 9,72/247 | 0.98 x 0.2/25 x 5 | 51.8/70 |
| 14"/350 | 12,67"/322 | 10 bar | 3/76,2 | 16/400 | 7,75/197 | 12,60/320 | 18,07/459 | 35,79/909 | 7,87/200 | 58,94/1497 | 11,14/283 | 10/254 | 2,55/65 | 9,76/248 | 1.38 x 0.24/35 x 6 | 81.4/110 |
| 16"/400 | 14,40"/366 | 10 bar | 3,50/89 | 18,03/458 | 7,75/197 | 14,49/368 | 20,31/516 | 42,32/1075 | 12,40/315 | 70,98/1803 | 15,31/389 | 13,22/336 | 3,58/91 | 11,25/286 | 1.38 x 0.24/35 x 6 | 118.4/160 |
| 18"/450 | 15,74"/400 | 10 bar | 3,50/89 | 19,25/489 | 10,62/270 | 16,34/415 | 21,61/549 | 44,84/1139 | 12,40/315 | 73,50/1867 | 15,31/389 | 13,22/336 | 3,58/91 | 11,25/286 | 1.38 x 0.24/35 x 6 | 140.6/190 |
| 20"/500 | 18,11"/460 | 10 bar | 4,50/114,2 | 21,73/552 | 10,62/270 | 18,11/460 | 24,21/615 | 52/1321 | 15,74/400 | 80,67/2049 | 15,31/389 | 13,34/339 | 3,58/91 | 11,25/286 | 1.38 x 0.24/35 x 6 | 199.8/270 |
| 24"/600 | 20,86"/530 | 10 bar | 4,50/114,2 | 25,07/637 | 10,62/270 | 20,12/511 | 27,04/687 | 56,85/1444 | 15,74/400 | 85,51/2172 | 15,31/389 | 13,34/339 | 3,58/91 | 11,25/286 | 1.57 x 0.27/40 x 7 | 333/450 |
| 30"/750 | 26,37/670 | 7 bar | 4,6/117 | 33,14/842 | 12,59/320 | 26,37/670 | 37/940 | 71,65/1820 | 19,68/500 | 115,55/2935 | 16,92/430 | 14,37/365 | 4,6/117 | 11,92/303 | 1.96 x 0.31/50 x 8 | 407/550 |
| 36"/900 | 31,88/810 | 7 bar | 4,6/117 | 38,18/970 | 12,59/320 | 31,49/800 | 43,3/1100 | 74,8/1900 | 19,68/500 | 126,96/3225 | 16,92/430 | 14,37/365 | 4,6/117 | 11,92/303 | 2,36 x 0.35/60 x 9 | 629/850 |

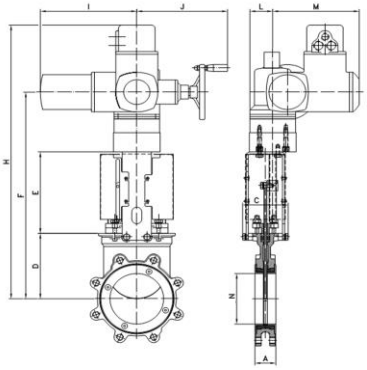

MODEL **BT (SER.22)**

ORBINOX
VALVE SOLUTIONS IN MORE THAN 70 COUNTRIES

# INSTALLATION, OPERATION & MAINTENANCE MANUAL

## BT (SERIES 22) Knife Gate Valve

SPAIN, UK, GERMANY, FRANCE, CANADA, USA, BRAZIL, CHILE, PERU, INDIA, CHINA, SOUTH EAST ASIA
www.orbinox.com

ORBINOX
VALVE SOLUTIONS IN MORE THAN 70 COUNTRIES

# INSTALLATION, OPERATION & MAINTENANCE MANUAL
## BT (SERIES 22) Knife Gate Valve

0. INTRODUCTION

1. HANDLING

2. INSTALLATION

3. ACTUATORS
   3.1. Handwheel
   3.2. Pneumatic
   3.3. Electric

4. MAINTENANCE
   4.1. Gland packing replacement
   4.2. Lubrication
   4.3. Replacement of the valve
   4.4. Replacement of the actuator

5. STORAGE

6. ENVIRONMENTAL CONSIDERATIONS

7. PARTS LIST & DRAWING

## 0. INTRODUCTION

The BT (SER.22) model knife gate is a bi-directional valve and consequently it can be installed without considering the flow direction.

This valve is designed for general industrial service applications. The design of the body and seat assures non-clogging shut-off with suspended solids.

The BT (SER.22) valve complies with the following European directives:

- 2006/42/EC: Machinery Directive

When applicable it can also comply with the following additional directives:

- 2014/68/EU: Pressure Equipment Directive
- 2014/34/EU: Potentially Explosive Atmospheres (ATEX)

It is the user's liability to clearly inform the maximum working conditions (PS, TS), medium (gas or liquid) and dangerousness group (1 or 2) and if the fluid is unstable to properly classify the valve according the 2014/68/EU PED directive

ORBINOX offers, supplies and certifies valves according to the information received from the customer. The customer is liable to make sure this information is accurate and according to specific working conditions requirements where the valve will be installed.

**Special requirements for ATEX valves:**

The BT (SER.22) valve may also comply with the directive regarding equipment and protective systems for their use in explosive atmospheres. In these cases, the logotype (see below) shall appear on the identification label of the valve. This label shows the exact classification of the zone where the valve can be used. The user will be liable for its use in any other zone.

This directive only applies in the following atmospheric conditions:
- 0,8 bar ≤ P ≤ 1,2 bar
- - 20ºC / -4F°< T < 60ºC /140F°

Any increase in temperature due to frictional warmth is negligible, since the relative speed of the moving parts is extremely low.

The risk analysis associated to this directive does not take into account the fluid that goes through the valve, even when such fluid produces an explosive atmosphere. The user must take into account the risks that the fluid generates, such as:

- Heating of the valve surface.
- Generation of electrostatic charges caused by displacement of the fluid.
- Shock waves caused by the installation (water hammer), internal crashes generated by the pellets or the risks due to foreign bodies susceptible of being present in the installation.

ATEX logotype

## 1. HANDLING

The valves are packed according to the appropriate transport standards. If you receive the packing damaged, please inform the transport company in writing and contact you ORBINOX representative.

When handling an ORBINOX valve please pay attention to the following points:

- DO NOT ATTACH LIFTING GEAR TO THE VALVE ACTUATORS OR GATE GUARDS. They are not designed to bear the weight, and could easily be damaged.

- DO NOT LIFT THE VALVE BY THE VALVE BORE.
This can cause damage to the seating surfaces and seals.

- Check that selected lifting gear is rated to carry the weight of the valve. The valve can be handled using eyebolts, soft straps or slings.

- EYEBOLTS: make sure the eyebolts have the same thread as the bolt holes and they are all well secured. Ideally when using lifting gear to move an ORBINOX valve, it should be supported by two or more eyebolts screwed into the tapped fixing holes in the valve body.

- SOFT STRAPS: with the valve in the closed position, the straps should be placed between the gland area and the bore such that the valve is balanced.

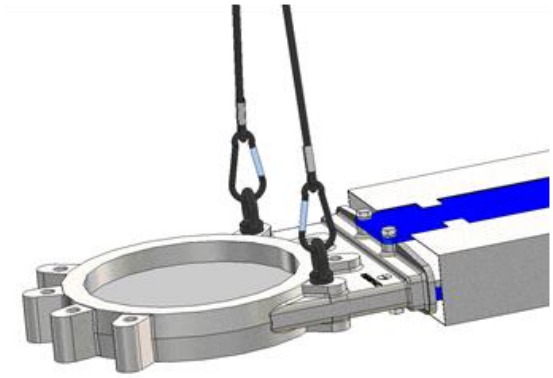

Fig. 1 Handling with eyebolts

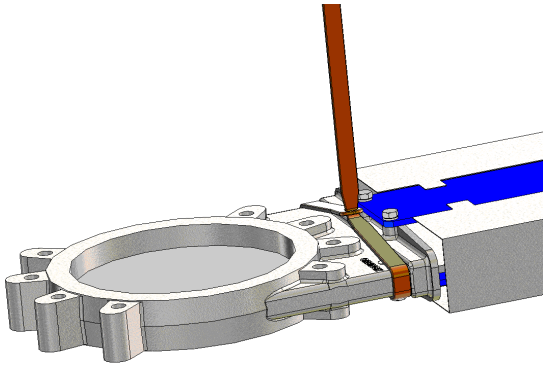

Fig. 2 Handling with soft straps

## 2. INSTALLATION

In order to avoid personal injury or damage to property when handling and installing the valve, it is important to observe the following warnings:

- It is the User's responsibility to verify compatibility of valve parts materials with the internal fluid
- Qualified and trained personnel must carry out the handling and maintenance of the valve
- Use suitable Individual Protection Equipment (IPE) (gloves, safety footwear...)
- Disconnect all lines affecting the valve and put up a notice notifying that work is being carried out on the valve
- Isolate the valve completely from the process
- Release process pressure
- Drain the fluid from the valve

**Special requirements for ATEX valves:**

- Make sure the valve is ATEX marked according to the requested zone and it includes all anti-static devices.
- During installation and maintenance operations, use hand tools (non-electric) which do not generate any potential ignition source such as sparks
- Personnel shall have a Working Authorization for explosive classified areas
- Check continuity between the body of the valve and the pipe (test in accordance with EN 12266-2 Standard, annex B, points B.2.2.2. and B.2.3.1).
- This check must be done every time the valve has been removed from the line, serviced, and put back to the line.
- The knife gate valve, included hand operated valves, must be always earthed, i.e., the electrical resistance to earth must be < $10^6$ Ω. The integration of the slide knife in the electrically conducting circuit should be checked regularly as required by the operation instructions.

Before installation, inspect the valve body and components for any damage that may have occurred during shipping or storage. Make sure the internal cavities within the valve body are clean. Inspect the pipeline and mating flanges, making sure the pipe is free of foreign material and that the flanges are clean. Note that these bi-directional knife gate valves are not suitable for dead-end service without a slight modification or a counter flange, please consult factory.

Standard BT (SER.22) valves are not suitable in all sizes for use with Slip on Angle Flanges. For use with this style flanges, please contact an ORBINOX representative for additional information.

Special care should be taken to maintain the correct distance between the flanges and to ensure that they are parallel to the valve body. Incorrect alignment of the valve can cause deformations, which can lead to difficulties in operation.

The following table gives the maximum torque values for the valve installation bolts. Also shown is the maximum depth (T) allowed for the tapped blind bolt holes drilled into the valve body.

| DN (inch/mm) | T (inch) | T (mm) | Torque (N.m) | Torque (lbf x ft) |
|---|---|---|---|---|
| 2"/ 50 - 4"/100 | 11/32" | 11 | 60 | 43 |
| 5"/125 - 8"/200 | 3/8" | 14 | 70 | 50 |
| 10"/250 -12"/300 | 18/32" | 18 | 110 | 80 |

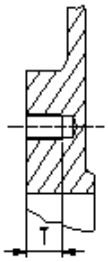


With heavy actuators (pneumatic, electric, etc.), with the valve installed horizontally (B) or at an angle (C) on a horizontal pipeline, the installation might require the construction of suitable supports. (See the following diagram and consult the technical department ORBINOX).

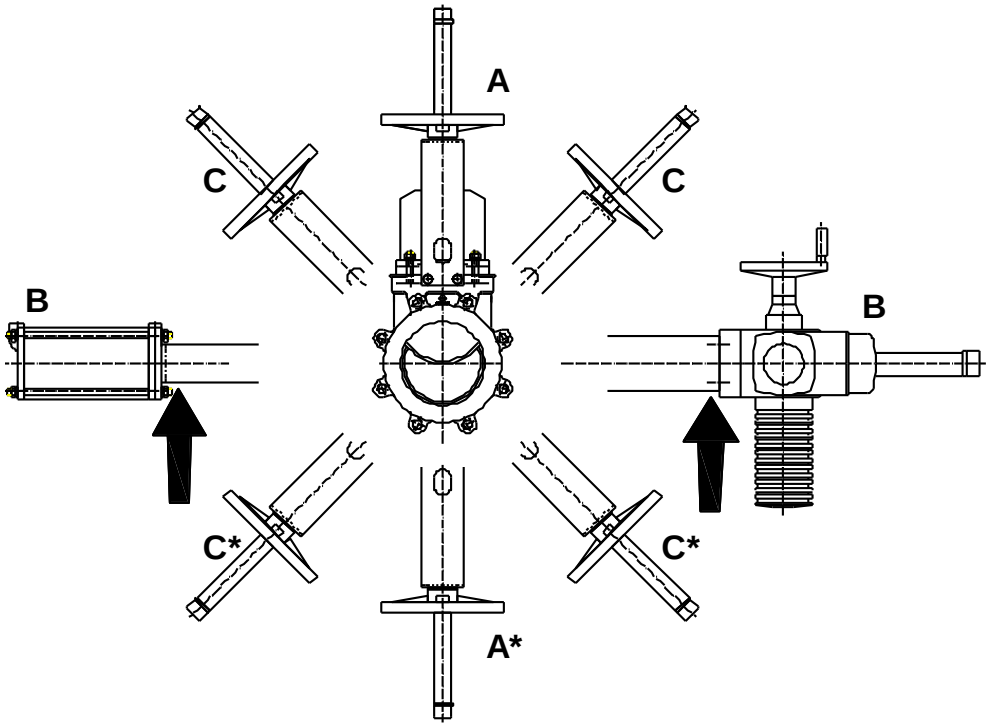


** For these positions please consult ORBINOX.*

Once the valve is installed, test that the flanges have been fastened correctly and that all electrical and/or pneumatic connections have been properly made.

First, operate the valve with no flow in the pipeline. Then test operation and valve seal with flow. It should be noted that the packing material might settle in shipping/storage, which can cause minor leakage. This can be remedied by tightening the gland follower (6) during installation. The nuts shall be tightened gradually and crosswise until the leakage stops (see the next figure). Check that there is no metal contact between the gland follower (6) and the gate (2).

The operation of automated valves is limited only with fitted gate covers to fulfil 2006/42/EC (machinery Directive).

If the gland follower nuts are over-tigtened, the force needed to operate the valve will increase, the valve function will be affected and the packing lifespan will be shortened.

The table below shows the maximum torque value for tightening the gland follower nuts.

| DN (inch/mm) | Torque (N.m) | Lbsf x ft |
|---|---|---|
| 2″/5 0 - 8″/200 | 15 | 11 |
| 10″/250 - 12″/300 | 25 | 18 |

Once performance has been tested, the valve can be put into operation.

Approximate weight of the handwheel-operated valves (rising stem):

| DN (inch/mm) | Weight (lbs /kg) |
|---|---|
| DN 2″ / 50 | 15 lbs / 7 kg |
| DN 2,5″ / 65 | 17 lbs / 8 kg |
| DN 3″ / 80 | 20 lbs / 9 kg |
| DN 4″ / 100 | 24 lbs / 11 kg |
| DN 5″ / 125 | 33 lbs / 15 kg |
| DN 6″ / 150 | 40 lbs / 18 kg |
| DN 8″ / 200 | 66 lbs / 30 kg |
| DN 10″ / 250 | 97 lbs / 44 kg |
| DN 12″ / 300 | 127 lbs / 58 kg |

## 3. ACTUATORS

The operation of automated valves is limited only with fitted gate covers to fulfil 2006/42/EC (machinery Directive).

**Special requirements for ATEX valves:**

- Allowed actuator for ATEX zones: pneumatic, hydraulic and electric motor. Hand operated and bare shaft valves are out of the scope of this Directive, but for installation and maintenance, same requirements for explosive areas valves shall apply.
- Make sure these actuators are ATEX marked according to the requested zone.
- Maximum travel speed of the gate must equal or below 1 m/s

### 3.1. HANDWHEEL

To open the valve, turn the handwheel (11) counter clockwise. To close turn the handwheel clockwise.

### 3.2. PNEUMATIC

Valves are usually supplied with a double acting pneumatic actuator although, upon request, we can supply single-acting actuators. In either case the air supply pressure can vary between 55psi/3,5 bar and 150psi/10 bar. However, the size of the actuator for each valve has been designed for an air supply pressure of 90psi/6 bar.

It is essential for a good maintenance of the cylinder that air should be well dried, filtered and lubricated. Air quality shall fulfil the following requirements:

- ISO 8573-1 Grade 5:4:3 for regular process (ON / OFF services)
- ISO 8573-1 Grade 5:3:3 for regular process at low temperature (-20 °C / -4F°)
- ISO 8573-1 Grade 3:4:3 for cylinders with positioners
- ISO 8573-1 Grade 3:3:3 for cylinders with positioners at low temperature (-20 °C / -4F°)

It is recommended to actuate the cylinder 3-4 times before the start up, once it is installed in the pipeline.

### 3.3. ELECTRIC ACTUATOR

Depending on the type or make of the electric actuator, specific instructions (i.e. a manufacturer's manual) will be supplied.

## 4. MAINTENANCE

The valve must not undergo any modifications without a previous agreement with ORBINOX. ORBINOX shall not be liable for any damages that may arise due to the use of non original parts or components

To avoid personal injury or damage to property from the release of process fluid:

- Those in charge of handling and maintenance of the valve must be qualified and trained in valve operations.
- Use appropriate personal protection equipment (gloves, safety shoes, etc).
- Shut off all operating lines to the valve and place a warning sign.
- Isolate the valve completely from the process.
- Release process pressure.
- Drain the process fluid from the valve.

**Special requirements for ATEX valves:**

- Make sure the valve is ATEX marked according the requested zone and it includes all anti-static devices.
- Those in charge of handling and maintenance of the valve must be qualified and trained regarding ATEX
- During installation and maintenance operations, use hand tools (non-electric)
- Personnel shall have a Working Authorization for explosive classified areas
- Periodicity of check and evaluation of valve electrical conductivity must be determined by end user according to valve working conditions. In any case, once the valve is put into operation, the packing area must be revised after the valve has been stroked 100 times or after 3 months of operation, whatever happens first. After this preliminary check, new checking periods must be determined by end user based on the results of this first check
- Clean the valve periodically to prevent dust accumulation. Do not sweep or dump the dust. Always use a vacuum cleaner system.
- Dead end service is not allowed.
- Do not apply any new coating to the valve. Should it require new coating, please contact our closest representative.
- Allowed sleeves: EPDM, FKM-FPM and NBR
- Allowed packing: ST, stainless, cupper and graphite
- To keep the ATEX approval, always use original spares from ORBINOX. Original order number is mandatory to receive the correct spares.
- Washer DIN 6798A (This washer guarantees continuity among carbon steel parts, coated in epoxy, yoke and body and stainless-steel guards for coating thicknesses up to 200 microns)
- After any maintenance it is mandatory to check that the valve is correctly earthed, included hand operated valves. Continuity between the valve body, the pipe, the gate, supports and guards must be tested (in accordance with EN 12266-2 Test F21 Annex B, B.2.2.2 and B.2.3.1). Packing shall be checked and pressurized for Zero leakage

## MAXIMUM FLUID TEMPERATURES

| Atmosphere | |
|---|---|
| Gas/air, steam/air, and mist/air | Dust/air |
| 80% of minimum fluid ignition temperature in °C | 2/3 of minimum dust cloud ignition temperature minus 10ºK, or minimum dust layer ignition temperature minus 85 °K (for layers up 5mm) |

*Note: these maximum fluid temperatures apply to all categories. The differences between categories are the consideration of foreseeable malfunction cases and rare malfunctions cases*

## MAXIMUM SEAL AND PACKING TEMPERATURES

| **Max Temperature (ºC) (F°)** | SLEEVE | | |
|---|---|---|---|
| | EPDM | FKM-FPM | NBR |
| | 120<br>248 | 200<br>392 | 120<br>248 |

| **Max Temperature (ºC) (F°)** | PACKING | |
|---|---|---|
| | ST | GRAPHITE |
| | 250<br>482 | 600<br>1112 |

*Note: Most of the times seals maximum temperature capacity is the key limitation factor when evaluating valve maximum working temperatures. In ATEX zones these temperatures must be compared to those above related to limitation of fluids temperatures.*
*Always consider the most restrictive as maximum valve working temperature.*

The only maintenance required is to change the gland packing (5) or the sleeve (3).
The life of these elements will depend on the working conditions of the valve such as: pressure, temperature, abrasion, chemical action, number of operations, etc.

To change the sleeve, remove the valve from the line.

### 4.1. Replacement of the gland packing (5) and the sleeve (3):

1.Depressurise the circuit and place the valve in close position.
2.Remove the gate guards (for automated valves only).
3. • Non rising stem valves. Photo1: Release the stem nut (8) from the gate (2).
   • Rising stem valves. Photo 2: Release the spindle or stem (7) from the gate (2).

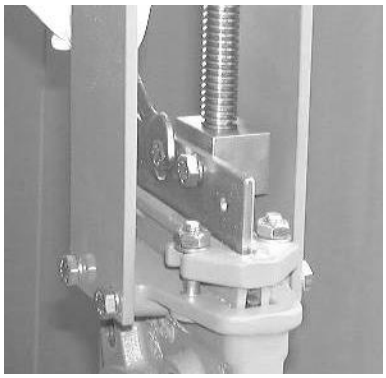
Photo 1

Photo 2

4. Loosen the screws of the yoke (9) and remove it (without loosing the actuator).
5. Loosen the nuts of the gland follower (6) and remove it. (Photo 5)
6. Remove the old packing rows (5), gate (2), 2 seat rings (4) and the old sleeve (3). Clean the stuffing box area.
7. In order to have the sleeve correctly positioned, have the new sleeve (3) greased and insert it in the body (1) cavity.
8. Introduce the gate (2) completely until the sleeve is totally centered. (Photo 3)
9. Fix the 2 seat rings (4) and secure them by means of bolts. (Photo 4)

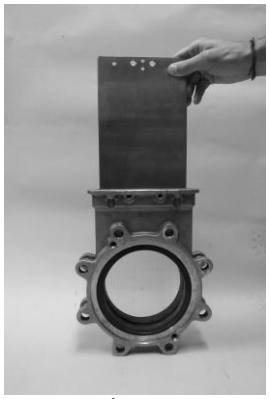
Photo 3

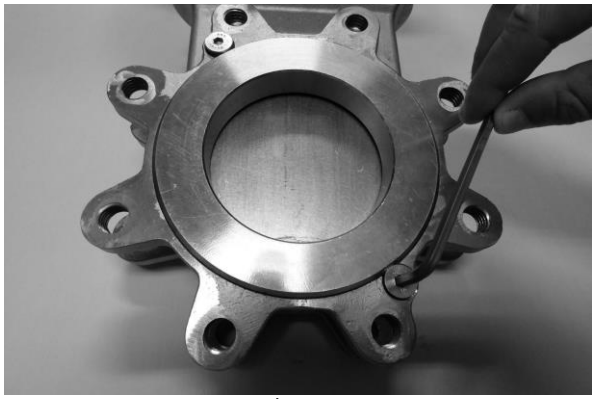
Photo 4

10. Once the necessary new rows of packing (5) have been inserted, proceed with a steady initial tightening of the gland follower (6). (Photo 5)

Photo 5

11. Reinstall the yoke (9) (with the actuator) and tighten it.
12. Reinstall the stem nut (8) to the gate (2) (Non rising stem valves. Photo 1) or reinstall the stem (7) to the gate (2) ( Rising stem valves.(Photo 2).
13. Reinstall the gate guards (for automated valves only).
14. Carry out some operations with a loaded circuit and then re-tighten the gland follower (6) to stop any leakage.

### 4.2. Lubrication:

Twice a year, it is recommended to remove the protection cap (14) and fill up the stem protector (13) halfway with a calcium-based grease with the following characteristics: highly water resistant, low ash content, and excellent adherence.

### 4.3. Replacement of the valve:

**Special requirements for ATEX valves**

To replace the whole valve:

1. The same valve with exactly the same certificates must be ordered to ORBINOX. When placing this order, it is customer liability to clearly indicate that the new ordered valve is a replacement of a certified valve.
2. It is user's liability to ensure that all requirements in the "maintenance" chapter are fulfilled
3. Loose the bolts than joint the actuator to the slide
4. Loose the yoke to body bolts
5. Reassemble the valve

### 4.4. Replacement of the actuator:

**Special requirements for ATEX valves**

To replace the actuator:

1. The same actuator with exactly the same certificates must be ordered to ORBINOX. When placing this order, it is customer liability to clearly indicate that the new actuator is a replacement of a certified valve
2. It is user's liability to ensure that all requirements in the "maintenance" chapter are fulfilled
3. Loose the bolts than joint the actuator to the yoke
4. Reassemble the valve

## 5. STORAGE

- For long storage periods keep the valves indoors in a safe and dry place and protect it from any impact and or vibrations
- Storage temperatures: -10ºC/ 14ºF to +40ºC/104ºF
- Valves must be stored in either full open or full closed position
- For any component installed in the valves, electric motors, solenoid valves, etc, please refer to their own instructions manuals

## 6. ENVIRONMENTAL CONSIDERATIONS

- The packaging is made from environmentally friendly materials. Dispose of the packaging through the available recycling channels
- The valve is designed and manufactured with materials that can be recycled by specialised recycling firms. Once the life of the product is expired, you have to consider a proper disposal of the product in order to prevent any negative impact on the environment and allows for the recycling of valuable commodities
- Please follow the local environmental rules in your country for proper disposal

ORBINOX
VALVE SOLUTIONS IN MORE THAN 70 COUNTRIES

## 7. PARTS LIST & DRAWINGS

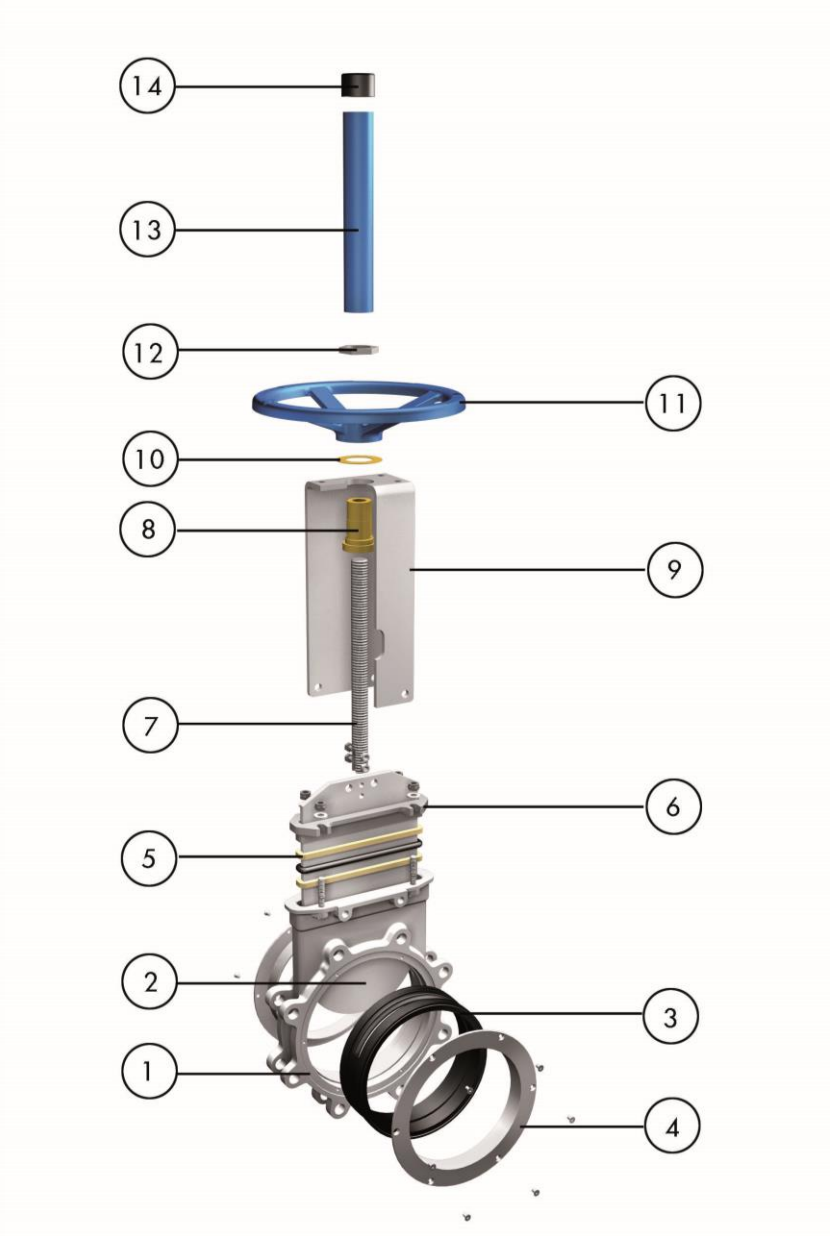


| | |
|---|---|
| 1. BODY | 8. STEM NUT |
| 2. GATE | 9. YOKE |
| 3. SLEEVE | 10. THRUST WASHER |
| 4. SEAT RING | 11. HANDWHEEL |
| 5. PACKING | 12. NUT |
| 6. GLAND FOLLOWER | 13. STEM PROTECTOR |
| 7. STEM | 14. CAP |

# SERIES PA

## PNEUMATIC CYLINDERS FOR VALVE ACTUATION

BORE SIZE: 3 1/4″ TO 20″ • RATING: 150 PSIG (1000 KPA)

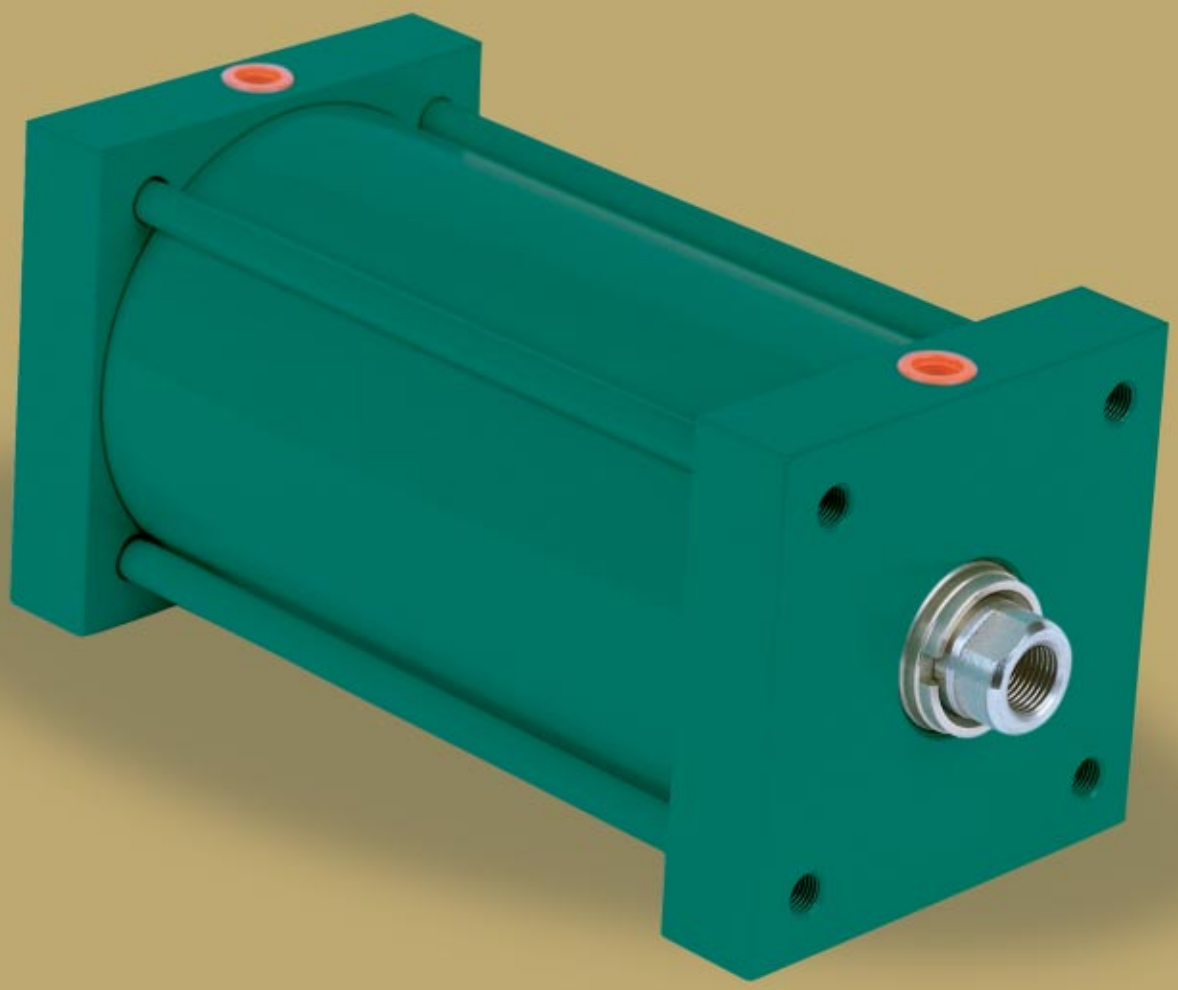

RDC

CONTRÔLE

# PNEUMATIC CYLINDERS FOR VALVE ACTUATION FEATURES

THE PA SERIES OF VALVE ACTUATORS ARE DESIGNED TO AUTOMATE VALVE OPERATION. THESE ACTUATORS CAN BE ADAPTED FOR MANY APPLICATIONS,INCLUDING SPECIAL NEEDS. THEIR COMPACT DESIGN ALLOWS FOR EASY INSTALLATION. IN ADDITION, RDC CONTROLE FABRICATES THEM UNDER STRICT QUALITY CONDITIONS.

## HEAD & CAP

Numerically controlled machined from hot rolled steel plates ASTM A36 or better.

## CYLINDER BARREL

Bore size from 3 1/4 to 12″: Heavy wall steel tubing with a polished chrome plated interior for better durability.

Bore size from 14″ to 20″: Thermoset fiber reinforced composite, specially designed for cylinder tubing for weight reduction and corrosion resistance.

## TIE RODS AND NUTS

Bore size from 3 1/4 to 12″: Made from STAINLESS STEEL to limit corrosion.

Bore size from 14″ to 20″: High strength steel barstock along with zinc plated steel nuts (Grade 5).

## PISTON PACKING

2 pressure sensitive "U" cups for better sealing and durability.

## GLAND BUSHING

Cartridge type, made from Bronze SAE 660. Seals can be replaced without dismantling the cylinder.

## PISTON ROD

High carbon content steel SAE 1045, ground, polished and chrome plated. (Chrome plated #316 stainless steel available on request).

## PISTON

Bore size from 3 1/4 to 8″: Numerically controlled machined from high strength aluminum barstock (6061-T6).
Bore size from 10″ to 20″: Made from mild steel. A wear strip is added on the outside diameter to protect the tube and assure a perfect fit.

## SEALS AND PACKING

"U" CUP AND "O" RING used for added security. A high durometer nitrile material is offered as a standard for a temperature rating from -34°C to 120°C (-30°F to 250°F). For temperature range up to 250°C (450°F), fluorocarbon (viton) seals and packings are available

## ROD WIPER

Stops dust and other particles from entering into the cylinder. Standard material is polyurethane. It can be replaced by fluorocarbon (viton) for higher temperature applications.

## PISTON WEAR STRIP

Bore size from 10″ to 20″: It consists of a teflon tape filled with particles of bronze and glass, for smoother piston operation.

# SERIES PA

## PNEUMATIC CYLINDERS FOR VALVE ACTUATION
## A0 - BASE MOUNTING

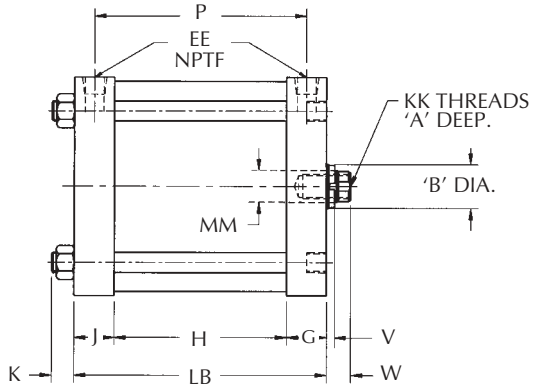


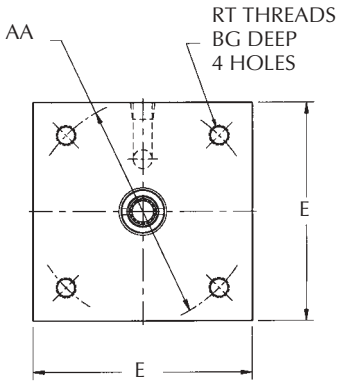


**Dimensions (in.)**

| BORE | MM ROD SIZE | KK UNF | A | AA | B | BG | E | EE NPTF | G | J | K | RT UNF | V | W | ADD STROKE | | |
|---|---|---|---|---|---|---|---|---|---|---|---|---|---|---|---|---|---|
| | | | | | | | | | | | | | | | LB | H | P |
| 3 1/4 | 1 | 5/8 - 18 | 1 1/2 | 3.900 | 1.375 | 5/8 | 3 3/4 | 1/4 | 1 | 1 | 3/8 | 3/8 - 24 | 1/4 | 3/4 | 3 | 1 | 2 |
| 4 | 1 | 5/8 - 18 | 1 1/2 | 4.700 | 1.375 | 5/8 | 4 1/2 | 1/4 | 1 | 1 | 3/8 | 3/8 - 24 | 1/4 | 3/4 | 3 | 1 | 2 |
| 5 | 1 | 5/8 - 18 | 1 1/2 | 5.800 | 1.375 | 1/2 | 5 1/2 | 1/4 | 1 | 1 | 1/2 | 1/2 - 20 | 1/4 | 3/4 | 3 1/8 | 1 1/8 | 2 1/8 |
| 6 | 1 | 5/8 - 18 | 1 1/2 | 6.900 | 1.375 | 1/2 | 6 1/2 | 1/4 | 1 | 1 | 1/2 | 1/2 - 20 | 1/4 | 3/4 | 3 1/8 | 1 1/8 | 2 1/8 |
| 7 | 1 | 5/8 - 18 | 1 1/2 | 8.100 | 1.375 | 5/8 | 7 1/2 | 3/8 | 1 1/4 | 1 1/4 | 5/8 | 5/8 - 18 | 1/4 | 3/4 | 3 3/4 | 1 1/4 | 2 1/2 |
| 8 | 1 | 5/8 - 18 | 1 1/2 | 9.100 | 1.375 | 5/8 | 8 1/2 | 3/8 | 1 1/4 | 1 1/4 | 5/8 | 5/8 - 18 | 1/4 | 3/4 | 3 3/4 | 1 1/4 | 2 1/2 |
| 10 | 1 3/8 | 1 - 14 | 2 | 11.200 | 1.875 | 3/4 | 10 5/8 | 3/8 | 1 1/2 | 1 1/2 | 3/4 | 3/4 - 16 | 5/16 | 1 | 4 3/4 | 1 3/4 | 3 1/4 |
| 12 | 1 3/8 | 1 - 14 | 2 | 13.300 | 1.875 | 3/4 | 12 3/4 | 1/2 | 1 1/2 | 1 1/2 | 3/4 | 3/4 - 16 | 5/16 | 1 | 4 3/4 | 1 3/4 | 3 1/4 |
| 14 | 1 3/8 | 1 - 14 | 2 | 15.400 | 1.875 | 7/8 | 14 3/4 | 1/2 | 1 3/4 1 | 1 3/4 1 | 7/8 | 7/8 - 14 | 5/16 | 1 | 5 1/2 | 2 | 3 3/4 |
| 16 | 2 | 1 1/2 -12 | 2 1/2 | 17.800 | 2.500 | - | 17 | 1/2 | 3/4 | 3/4 | 1 | - | 3/8 | 1 1/2 | 5 5/8 | 2 1/8 | 3 7/8 |
| 18 | 2 | 1 1/2 -12 | 2 1/2 | 20.000 | 2.500 | - | 19 | 3/4 | 1 3/4 | 1 3/4 | 1 1/8 | - | 3/8 | 1 1/2 | 5 7/8 | 2 3/8 | 4 1/8 |
| 20 | 2 | 1 1/2 -12 | 2 1/2 | 22.300 | 2.500 | - | 21 | 3/4 | 1 3/4 | 1 3/4 | 1 1/4 | - | 3/8 | 1 1/2 | 6 1/8 | 2 5/8 | 4 3/8 |

## ROD THREADS

**TYPE -4-**
Female threads (standard)

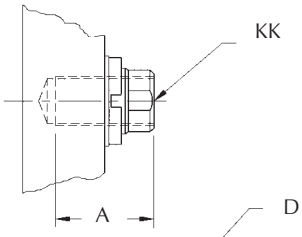


**TYPE -1-**
Male threads (optionnal)

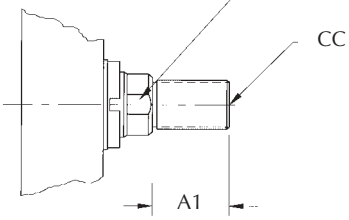


**Dimensions (in.)**

| ROD SIZE | A1 | CC UNF-2A | D | A | KK UNF-2B |
|---|---|---|---|---|---|
| 1 | 1 1/8 | 3/4 - 16 | 7/8 | 1 1/2 | 5/8- 18 |
| 1 3/8 | 15/8 | 1 - 14 | 1 1/8 | 2 | 1 - 14 |
| 2 | 21/4 | 1 1/2 - 12 | 1 11/16 | 2 1/2 | 11/2 - 12 |

RDC Contrôle can also manufacture special rod ends to answer your specific needs.
Use thread type –9– in model number and specify required dimensions

# SERIES PA

## PNEUMATIC CYLINDERS FOR VALVE ACTUATION
## OPTIONAL MOUNTINGS

### E3 – SQUARE HEAD MOUNTING
**BORE SIZE: 7″ TO 20″ ONLY**

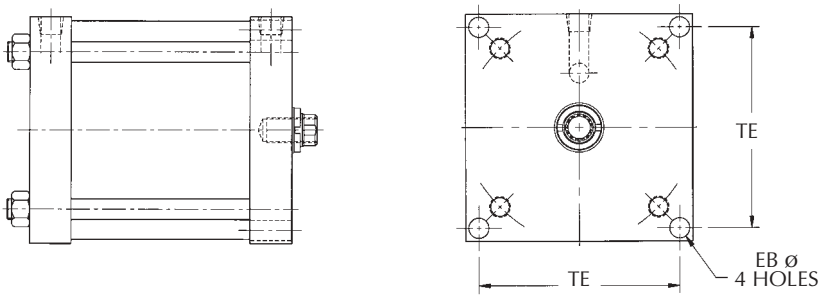


### X3 – EXTENDED TIE RODS MOUNTING

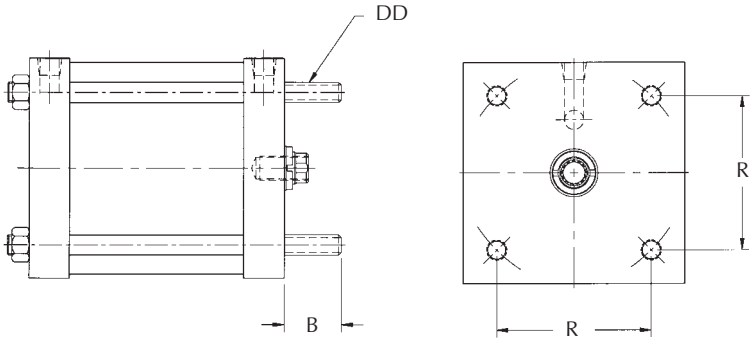


| BORE | EB | TE | BB | DD UNF | R |
|---|---|---|---|---|---|
| 3 1/4 | – | – | 1 3/8 | 3/8 – 24 | 2.76 |
| 4 | – | – | 1 3/8 | 3/8 – 24 | 3.32 |
| 5 | – | – | 1 3/4 | 1/2 – 20 | 4.10 |
| 6 | – | – | 1 3/4 | 1/2 – 20 | 4.88 |
| 7 | 9/16 | 6.75 | 2 | 5/8 – 18 | 5.73 |
| 8 | 11/16 | 7.57 | 2 | 5/8 – 18 | 6.44 |
| 10 | 13/16 | 9.40 | 2 1/4 | 3/4 – 16 | 7.92 |
| 12 | 13/16 | 11.10 | 2 1/4 | 3/4 – 16 | 9.40 |
| 14 | 15/16 | 12.87 | 2 1/2 | 7/8 – 14 | 10.90 |
| 16 | 1 1/16 | 14.85 | 2 3/4 | 1 – 14 | 12.59 |
| 18 | 1 3/16 | 16.69 | 3 1/4 | 1 1/8 – 12 | 14.14 |
| 20 | 1 5/16 | 18.46 | 3 1/4 | 1 1/4 – 12 | 15.77 |

RDC Contrôle can also adapt any special mounting to your needs. Consult our engineering department.

## VALVE MOUNTINGS, OPTIONS AND ACCESSORIES

RDC Contrôle can also design and fabricate your valve mountings. In addition, we can also add a complete range of accessories to answer your automation requirements.

### CYLINDER OPTIONS
- Stainless steel piston rod
- Double ended cylinder
- Viton seals (450°F)
- Piston rod scrapper
- Special exterior finish
- Water operation (AWWA)
- Spring return (fail safe)
- Multiple stage cylinder

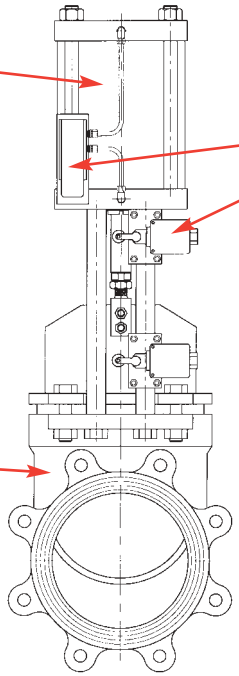

### AUTOMATION ACCESSORIES
- Control valve:
  - Manual
  - Solenoid
- Limit switches
- Positioners
- Position transmiters

### VALVE TYPES
- Knife gate
- Wedge gate
- Globe
- Pinch
- Sluice

### OTHER OPTIONS
- Stroke adjustment
- Manual overide
- Stainless steel mounting
- Air fail safe system

# SERIES PA

## PNEUMATIC CYLINDERS FOR VALVE ACTUATION
## MODEL NUMBERING

| Series | Bore | Rod size | Rod threads | Cushions | Mounting | Option suffix | Stroke |
|---|---|---|---|---|---|---|---|
| **PA** | G - 3 1/4<br>H - 4<br>K - 5<br>L - 6<br>M - 7<br>N - 8<br>P - 10<br>R - 12<br>S - 14<br>T - 16<br>V - 18<br>W - 20<br>Z -OTHERS | E - 1<br>G - 1 3/8<br>J - 2<br>K - 2 1/2<br>Z - OTHERS | 1 - Male (opt.)<br>4 - Female (STD)<br>5 - Added stud<br>9 - Special | N - none | AO - Base<br>E3 - Square head<br>X3 - Extended tie rods<br>Z9 - Special<br>or<br>Valve mounting<br>State:<br>- Make<br>- Type<br>- Size | (Blank if none)<br>A - Stroke adjustment<br>D - Double-rod<br>E - Special exterior finish<br>J - Rod extention<br>S - Stainless steel piston rod<br>T - Stop tube<br>V - Viton seals for temp. up to 250°C (450°F)<br>W -Water operation specs. AWWA C-504<br>X - Spring to extend<br>Y - Spring to retract<br>Z - Others | |
| PA | L | E | 4 | N | AO | V | 11 |
| Series PA | 6"Bore | 1" Rod | Female threads | No cushions | Base mount | Viton seals | 11" stroke |

## REPLACEMENT PARTS

Spare parts and seal kits can be ordered, using the part number prefix, followed by the cylinder model number
**EXAMPLE: 20–PALE4NAO-11 (piston).**
It is recommended to provide the cylinder serial number to facilitate inquiries for part replacement.

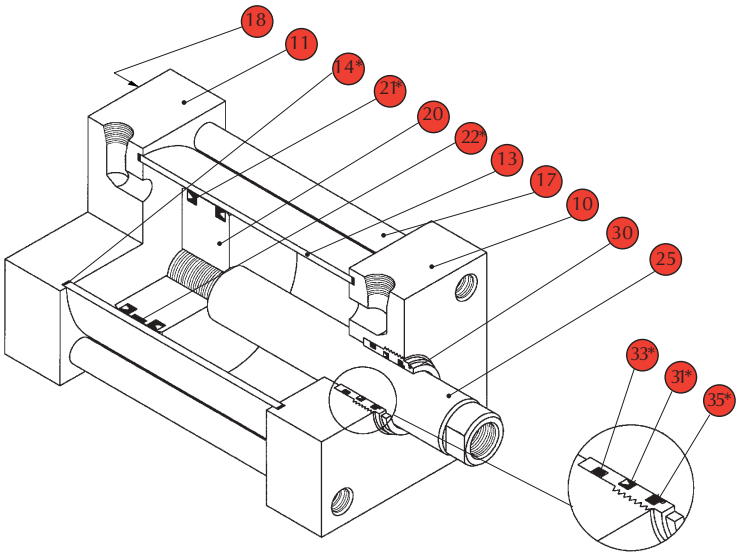


| Pieces | Description | Qty |
|---|---|---|
| 10 | Head | 1 |
| 11 | Cap | 1 |
| 13 | Barrel | 1 |
| 14* | Barrel seals | 2 |
| 17 | Tie rods | 4 |
| 18 | Tie rod nuts | 4 |
| 20 | Piston | 1 |
| 21* | Piston packings | 2 |
| 22* | Wear strip (10" and up) | 1 |
| 25 | Piston rod | 1 |
| 30 | Gland bushing | 1 |
| 31* | Gland packing | 1 |
| 33* | Gland seal | 1 |
| 35* | Piston rod wiper | 1 |

| Seal kit | |
|---|---|
| 29 | for piston (parts #21 and #22) |
| 39 | for bushing (parts #31, #33 and #35) |
| 99 | Complete (parts indicated with an *) |

A Maintenance & Operation Manual (#8 - PA) is available for more detailled maintenance instructions of Series PA actuators.

### Torque chart (minimum & maximum)

| Bore size | Tie rods | | Gland bushing | |
|---|---|---|---|---|
| | Dia. | Torque (ft-lbs) | Rod dia. | Torque (ft-lbs) |
| 3 1/4 - 4 | 3/8 | 6-15 | 1" | 30 - 50 |
| 5 - 6 | 1/2 | 15-30 | 1" | 30 - 50 |
| 7 | 5/8 | 20-70 | 1" | 30 - 50 |
| 8 | 5/8 | 30-70 | 1" | 30 - 50 |
| 10 | 3/4 | 55-110 | 1 3/8 | 40 - 60 |
| 12 | 3/4 | 70-110 | 1 3/8 | 40 - 60 |
| 14 | 7/8 | 100-180 | 1 3/8 | 40 - 60 |
| 16 | 1 | 150-350 | 2" | 55 - 75 |
| 18 | 1 1/8 | 220-500 | 2" | 55 - 75 |
| 20 | 1 1/4 | 300-720 | 2" | 55 - 75 |

CONTRÔLE

**MANUFACTURER**
**THERMOCOUPLES - RTD'S**
**CYLINDERS**

1100 Michele-Bohec, Blainville (Quebec) J7C 5N5
Tel.: (450) 434-0216 - Fax: (450) 434-0219 - Toll free: 1-800-363-2264
Internet: www.rdccontrol.com

MRK-101 Rev : 1

# Pressure Reducing Valve
# Type 582

## General

- **Size**: ⅜"–2"
- **Material**: PVC, CPVC, PROGEF® Standard PP, SYGEF® Plus PVDF-HP
- **Bonnet**: Glass-filled PP
- **Diaphragm**: PTFE/EPDM
- **Seals**: EPDM, FPM, PTFE
- **End Connection**: Solvent cement socket, threaded, flanged, fusion spigot, fusion socket
- **Mounting**: Stainless steel threaded inserts
- **Set Pressure Range**: 7-130psi
- **Hysteresis**: Approx. 1.5–5.8 psi
- **Standard Pack Quantity**: 1 valve

## Key Certifications

- **FDA CFR 21 177.1520**: PP and PVDF
- **FDA CFR 21 177.2600**: EPDM and FPM
- **FDA CFR 21 177.1550**: PTFE
- **USP Class VI (physiological non-toxic)**: EPDM, FPM, PTFE, PP and PVDF
- **ABS**: All materials

## Sample Specification

The Type 582 Pressure Reducing Valve shall control downstream pressure. The set pressure shall be controlled via an adjustment screw. The body shall be fully molded. The spindle shall be of non-rising design. The bonnet connection shall be of threaded design. Versions utilizing elastomeric cartridge seals shall be positive shutoff. Versions utilizing PTFE cartridge seals be leakage class C according to DIN EN1226-1. The seal material shall be indicated by the color of an external tab. ANSI versions shall meet ANSI B16.5 150lb standards. All valves shall be tested in accordance to ISO9393. All valves shall be manufactured under ISO9001 for Quality and ISO14001 for Environmental Management. Following assembly, every valve shall be tested and certified bubble tight exceeding Class VI standards.

## Important Note

- Minimum of 15psi differential pressure required to ensure proper functionality.

## Material Specification

PVC valves shall meet ASTM D1784 cell classification 12454 standards. CPVC valves shall meet ASTM D1784 cell classification 23447-B standards. PP valves shall meet ASTM D5847-14 cell classification PP0510B66851 standards. PVDF valves shall be type 1, grade 2 according to ASTM D3222 standards. Valves of all materials shall be RoHS compliant.

## Valve Function

The pressure reducing valve reduces the line pressure to a set value on the valve outlet. The outlet pressure is in no direct relation to the inlet pressure. Independent of raising or falling inlet pressure, the outlet pressure stays constant.

## Key Design Feature

### Fully Molded

The Type 582 Valve Body is fully molded, providing several performance benefits. Machining bodies can create sharp corners at high stress points that can lead to stress cracking. The flow characteristics between two like machined bodies can differ significantly because of small dimensional inconsistences and true union connections often require additional fusions which increases the number of leak paths in a given valve. The Type 582 eliminates all of these issues to provide consistent performance with a variety of end connection options.

## Optional Features

- **Gauge**: SS304, Brass
- **Gauge Guard**: PVDF/EPDM, PVDF/FPM
- **End Connection**: Alternatives available upon request
- **Set Pressure Range**: 4-44psi
- **Cleaned**: Silicone free/oil free
- **High Purity**: Elastomeric version with positive shutoff

## Material Availability

- **⅜" (d16)** - PVC metric spigot (adapter unions available)
- **½"-2" (d20-d63)** - All material/end connections
- **PTFE seals -** SYGEF Plus, PVDF-HP

## Optional Feature

### Pressure Gauges

- A pressure gauge can be mounted on either side of the valve to accommodate required installation direction and ensure gauge visibility. The two sides of the valve are differentiated by a letter molded into each side of the valve as shown below, side A flow going left to right and side B flow going right to left.
- Standard gauges are 304 stainless steel or brass with either EPDM or FPM elastomeric seals.
- Alternative gauges of the user's preference can be installed upon request either with a threaded adapter or direct mount.
- All valve bodies can accommodate two gauges at a time and both sides can be drilled to measuring either upstream or downstream pressure.

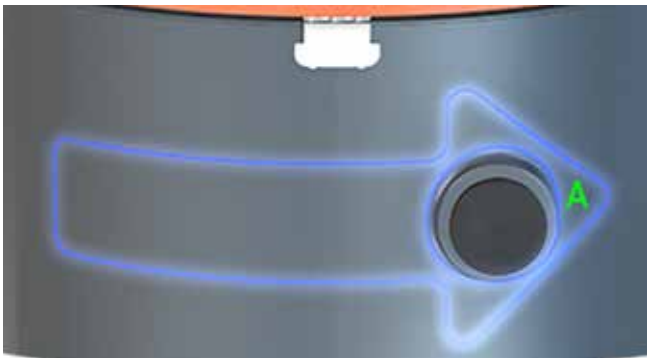

## Components

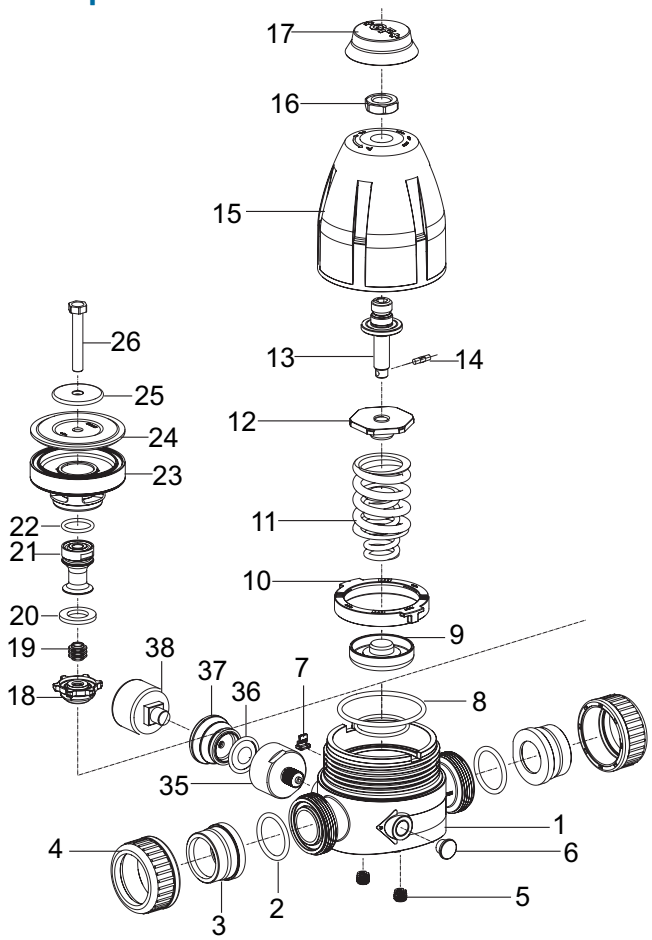


| Part | Description | Material |
|---|---|---|
| 1 | Valve body | PVC, CPVC, PP or PVDF |
| 2 | Face seal | EPDM or FPM |
| 3 | Union end | PVC, CPVC, PP, PPn, ABS, PE or PVDF |
| 4 | Union nut | PVC, CPVC, PP or PVDF |
| 5 | Threaded insert | 304 stainless steel |
| 6 | Gauge port plug | Glass-filled PP |
| 7 | Indicator tab | Glass-filled PP |
| 8 | Cartridge seal set | EPDM or FPM |
| 9 | Pressure piece | 304 stainless steel |
| 10 | Retaining ring | Glass-filled PP |
| 11 | Spring set | Steel EN10270-1SH (C) Deltatone coated |
| 12 | Spring retainer | Brass |
| 13 | Spindle | 304 stainless steel |
| 14 | Spindle pin | 304 stainless steel |
| 15 | Bonnet | Glass-filled PP |
| 16 | Adjustment screw nut | 304 stainless steel |
| 17 | Protective cap | Glass-filled PP |
| 18 | Cartridge nut cover | PVC, CPVC, PP or PVDF |
| 19 | Cartridge nut | 304 stainless steel |
| 20 | Cartridge flat gasket | EPDM, FPM or PTFE |
| 21 | Piston | PVC, CPVC, PP or PVDF |
| 22 | Piston seal | EPDM, FPM or PTFE |
| 23 | Cartridge | PVC, CPVC, PP or PVDF |
| 24 | Diaphragm | PTFE/EPDM |
| 25 | Diaphragm plate | 304 stainless steel |

## Key Design Features

### Cartridge

The 5-Series PRV's modular design allows the user essentially completely rebuild a valve by swapping out the cartridge. A valve can be switched from reducing to retaining or vice versa in the same manner.

### Modular Design

Multiple size valves of the same body material share components: ⅜" & ½", ¾" & 1" and 1¼"–2" have all like components listed above numbers 6-25.

# Technical Data

## Pressure Temperature Curves

The following graphs are based on a 25 year lifetime water or similar media application

### PVC

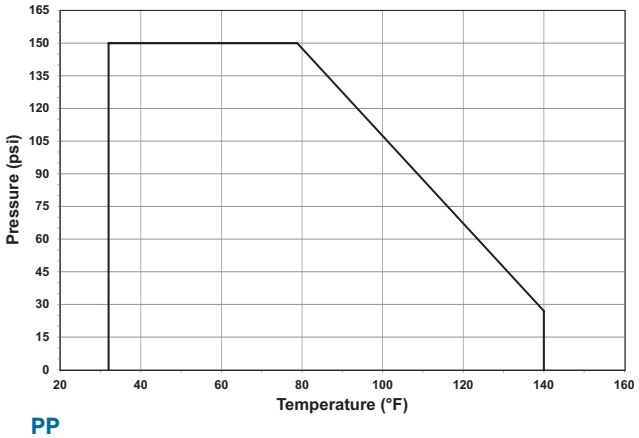


### CPVC

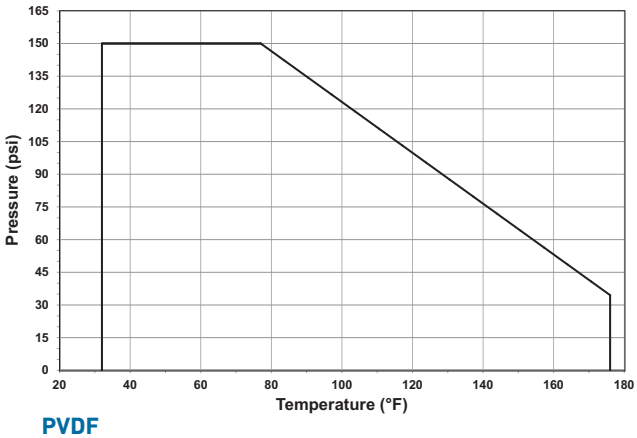


### PP

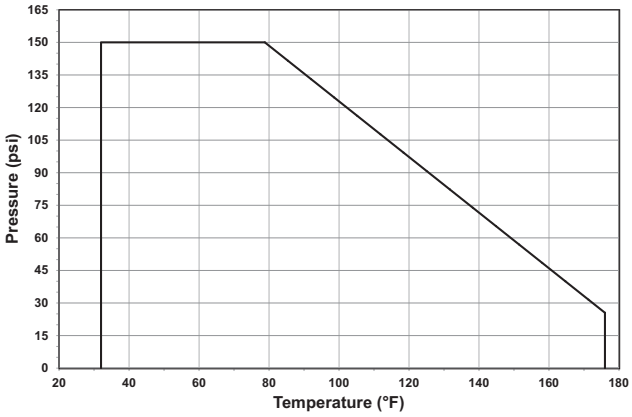


### PVDF

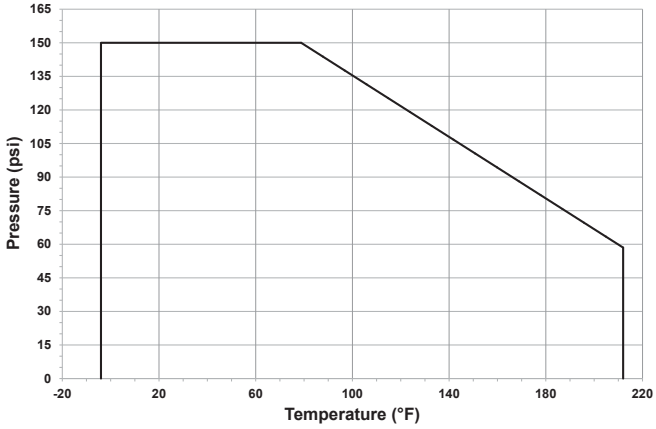


### Pressure-Temperature

| Material | Temperature Range (°F) | Max Pressure (psi) |
|---|---|---|
| PVC | 32 to 140 | 150 |
| CPVC | 32 to 176 | 150 |
| PP | 32 to 176 | 150 |
| PVDF | -4 to 212 | 150 |

## Key Design Feature

The threaded bonnet design of the Type 582 was pioneered by GF and provides end users several benefits. Traditionally designed thermoplastic pressure regulating valves require metallic body bolts to compress the body seals. When a valve is used in a hot or cold line applications, the thermoplastic valve components and the metallic bolts expand and contract at different rates as they are heated or cooled. This can result in the degradation of the body seals that can only be avoided by the operator retorqing the body bolts following a significant process temperature change such as a hot line shut down. The threaded bonnet design eliminates this issue because the body and bonnet expand and contract at approximately the same rate, maintaining the diaphragm seal and reducing required maintenance.

# Flow

The following graphs are based on a 25 year lifetime water or similar media application

### Cv Values

| Size (Inch) | d (mm) | Cv (gal/min) |
|---|---|---|
| ⅜ | 16 | 3.1 |
| ½ | 20 | 3.3 |
| ¾ | 25 | 7.7 |
| 1 | 32 | 8.9 |
| 1¼ | 40 | 17.5 |
| 1½ | 50 | 20.2 |
| 2 | 63 | 22.0 |

# Valve Sizing

### Hysteresis Curve

The curves below are valid for the set range 7–130 psi and show the secondary or outlet pressure P2 over the flow Q in gal/min. Parameter is the set pressure pE at Q = 0 gal/min. There curves are valid for water at 70°F for a flow velocity of 6.6 ft/s.

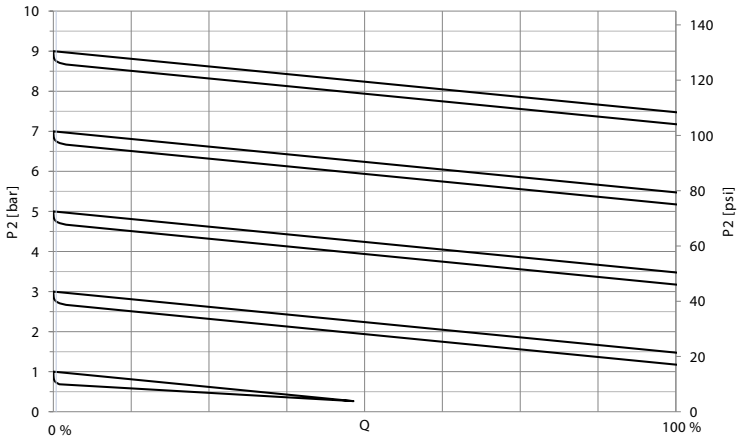


**100% corresponds to a flow velocity of 6.6 ft/s**

### Max Flow Rates

| Size | | l/h | gpm |
|---|---|---|---|
| d16 | (⅜") | 1,000 | 4.4 |
| d20 | (½") | 1,600 | 7.0 |
| d25 | (¾") | 2,500 | 11.0 |
| d32 | (1") | 4,000 | 17.6 |
| d40 | (1¼") | 6,000 | 26.4 |
| d50 | (1½") | 10,000 | 44.0 |
| d63 | (2") | 16,000 | 70.4 |

On the left, you see the schematic diagrams of the hysteresis curve. The table above shows the maximum values at 100% in the diagram.

# Key Design Feature

The high purity version of the Type 582 Pressure Reducing Valve provides several design improvements over competitive high purity PRVs. The elastomer free cartridge and reduced piston stroke greatly reduces particle shedding and leachable potential. All high purity valves are cleaned, assembled, tested and double bagged in a class 10,000 clean room.

# Dimensions

The following tables are shown in millimeters unless otherwise specified

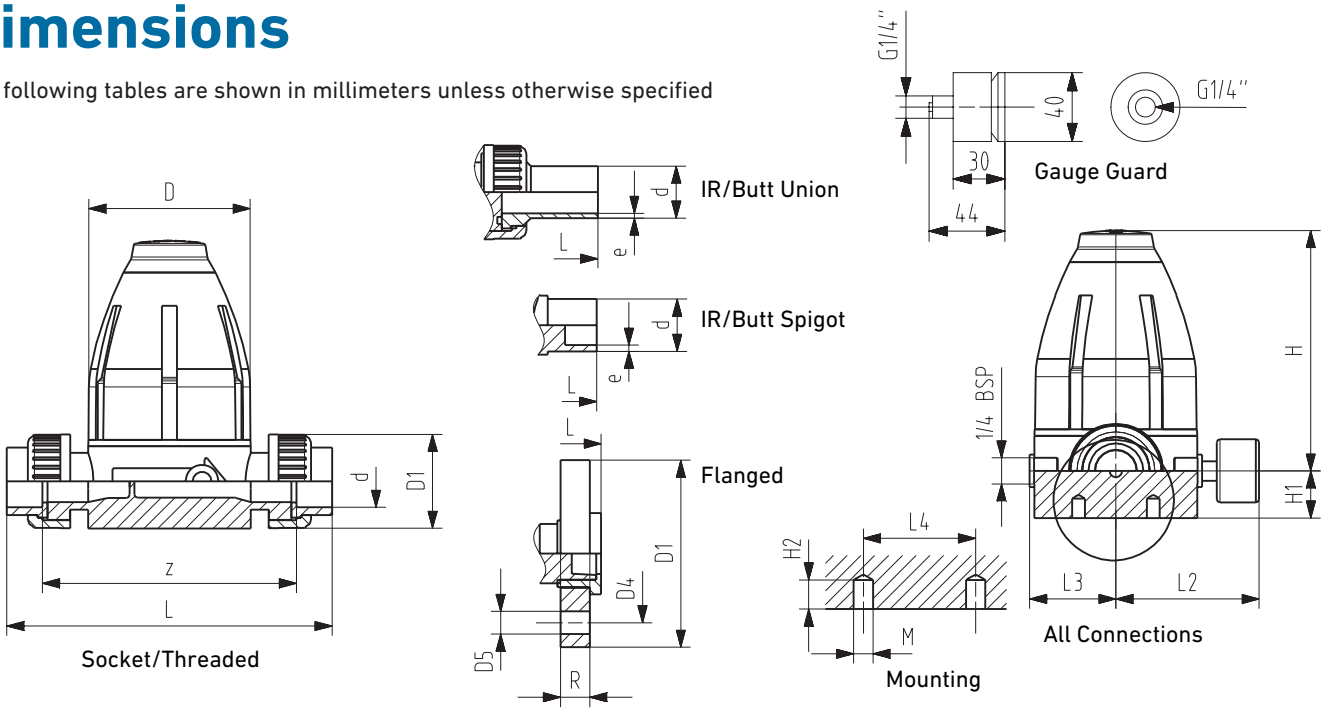


## All Materials

| Size (inch) | d (mm) | D | D1 | H | H2 | L2 | L3 | L4 | M |
|---|---|---|---|---|---|---|---|---|---|
| ⅜ | 16 | 79 | 43 | 111 | 12 | 77 | 42 | 45 | M6 |
| ½ | 20 | 79 | 43 | 111 | 12 | 77 | 42 | 45 | M6 |
| ¾ | 25 | 100 | 51 | 148 | 12 | 88 | 53 | 45 | M6 |
| 1 | 32 | 100 | 58 | 148 | 12 | 88 | 53 | 45 | M6 |
| 1¼ | 40 | 147 | 72 | 207 | 15 | 111 | 76 | 70 | M8 |
| 1½ | 50 | 147 | 83 | 207 | 15 | 111 | 76 | 70 | M8 |
| 2 | 63 | 147 | 101 | 207 | 15 | 111 | 76 | 70 | M8 |

## PVC/CPVC

| | IPS Socket | | Threaded NPT | | ANSI Flanged | | | | |
|---|---|---|---|---|---|---|---|---|---|
| Size (inch) | L | z | L | z | L | D1 (inch) | D4 (inch) | D5 (inch) | R (inch) |
| ½ | 171 | 126 | 163 | 124 | 140 | 3.74 | 2.36 | 0.63 | 0.6 |
| ¾ | 207 | 156 | 198 | 157 | 180 | 4.13 | 2.76 | 0.63 | 0.7 |
| 1 | 214 | 156 | 203 | 155 | 180 | 4.53 | 3.11 | 0.63 | 0.7 |
| 1¼ | 275 | 211 | 269 | 213 | 229 | 5.51 | 3.5 | 0.63 | 0.8 |
| 1½ | 281 | 211 | 272 | 226 | 229 | 5.91 | 3.86 | 0.63 | 0.9 |
| 2 | 288 | 211 | 284 | 239 | 249 | 6.5 | 4.76 | 0.75 | 0.9 |

## PP

| d | IR/Butt Fusion Union | | IR/Butt Fusion Spigot | | Socket Fusion Union | |
|---|---|---|---|---|---|---|
| (mm) | L | e | L | e | L | z |
| 20 | 228 | 1.9 | 150 | 1.9 | 158 | 126 |
| 25 | 264 | 2.3 | 190 | 2.3 | 192 | 156 |
| 32 | 270 | 2.9 | 190 | 2.9 | 196 | 156 |
| 40 | 331 | 3.7 | 240 | 3.7 | 255 | 211 |
| 50 | 337 | 4.6 | 240 | 4.6 | 261 | 211 |
| 63 | 343 | 5.8 | 259 | 5.8 | 269 | 211 |

## PVDF

| d | IR/Butt Fusion Union | | IR/Butt Fusion Spigot | | Socket Fusion Union | |
|---|---|---|---|---|---|---|
| (mm) | L | e | L | e | L | z |
| 20 | 226 | 1.9 | 150 | 1.9 | 158 | 130 |
| 25 | 262 | 1.9 | 190 | 1.9 | 192 | 160 |
| 32 | 268 | 2.4 | 190 | 2.4 | 196 | 160 |
| 40 | 329 | 2.4 | 240 | 2.4 | 255 | 215 |
| 50 | 335 | 3 | 240 | 3 | 261 | 215 |
| 63 | 340 | 3 | 260 | 3 | 269 | 215 |

GF Piping Systems

# Bedienungsanleitung
## Instruction manual
## Manuel d‘utilisation
## Manual de instrucciones

**Druckreduzierventil Typ 582**
**Pressure Reducing Valve Type 582**
**Réducteur de pression type 582**
**Válvula reductora de presión tipo 582**

**Druckhalteventil Typ 586**
**Pressure Retaining Valve Type 586**
**Détendeur de pression type 586**
**Válvula de retención de presión tipo 586**

# Translation of the original instructions

**Disclaimer**

The technical data are not binding. They neither constitutes expressly warranted characteristics nor guaranteed properties nor a guaranteed durability. They are subject to modification. Our General Terms of Sale apply.

**Observe instruction manual**

The instruction manual is part of the product and an important element within the safety concept.

- Read and observe instruction manual.
- Always have instruction manual available by the product.
- Give instruction manual to all subsequent users of the product.

# Contents

Contents ....28
1 About this document ....29
1.1 Warnings ....29
1.2 Further symbols and labels ....29
1.3 Other related documents ....29
2 Safety and responsibility ....30
2.1 Intended use ....30
2.2 Safety information ....30
3 Transport and storage ....30
4 Design ....31
4.1 Pressure reducing valve ....31
4.2 Pressure retaining valve ....32
4.3 Manometer ....33
5 Function ....33
5.1 Pressure reducing valve ....33
5.2 Pressure holding valve ....33
6 Identification ....34
6.1 Valve type/sealing material (O-rings) ....34
7 Technical specifications ....34
8 Required tools ....35
9 Installation ....35
10 Operation ....38
10.1 Pressure test ....38
10.2 Setting the working pressure ....38
11 Maintenance ....40
11.1 Replacing diaphragm and O-ring ....41
11.1.1 Disassembly ....41
11.1.2 Assembly ....43
11.2 Cleaning the inner body ....45
12 Troubleshooting ....46
13 Spare Parts ....48
14 Accessories ....48
15 Disposal ....48
16 EC Manufacturer's declaration ....49

# 1 About this document

## 1.1 Warnings

In this instruction manual, warnings are used, which shall warn you of death, injuries or material damage. Always read and observe these warnings!

| Warning symbol | Meaning |
|---|---|
| **DANGER** | Imminent danger!<br>Non-observance of these warnings can result in death or extremely severe injuries.<br>▶ Measures to avoid the danger. |
| **WARNING** | Possible imminent danger!<br>Non-observance of these warnings can result in severe injuries.<br>▶ Measures to avoid the danger. |
| **CAUTION** | Dangerous situation!<br>Non-observance of these warnings can result in minor injuries.<br>▶ Measures to avoid the danger. |
| **CAUTION** | Dangerous situation!<br>Non-observance of these warnings can result in material damage.<br>▶ Measures to avoid the danger. |

## 1.2 Further symbols and labels

| Symbol | Meaning |
|---|---|
| i | Remarks: Contain especially important information for better understanding. |
| ▶ | Call for action: Here, you have to do something. |
| 1. | Call for action in a certain order: Here, you have to do something. |

## 1.3 Other related documents

- Georg Fischer planning fundamentals industry

These documents can be obtained via the agency of GF Piping Systems or under www.gfps.com.

# 2 Safety and responsibility

## 2.1 Intended use

Pressure reducing valves type 582 and the pressure retaining valves type 586 are intended to be operated with pure, non-abrasive liquid media. The product and all of its components are intended to be used within the permitted pressure and temperature limits and in accordance with their chemical resistance.

**Pressure reducing valve type 582**

The pressure reducing valves type 582 are intended to reduce the system pressure, after installation into a piping system, and to keep it constant at the specified value to the greatest possible extent.

**Pressure retaining valve type 586**

The pressure retaining valves of type 586 are intended to keep the system pressure, after installation into a piping system, and to keep it constant at the specified value to the greatest possible extent.

**Foreseeable misuse**

The pressure reducing valves type 582 and the pressure retaining valves type 586 are not intended to be used as shut-off devices.

The pressure reducing valves type 582 and the pressure retaining valves type 586 are not intended to be operated with gases or other compressible media.

## 2.2 Safety information

In order to provide safety in the plant, the operator is responsible for the following measures:

- Only use product as intended, see intended use.
- Do not use any damaged or faulty product. Sort out any damaged product immediately.
- Make sure that the piping system has been installed professionally and is inspected regularly.
- Product and accessories shall only be installed by persons who have the required training, knowledge or experience.
- Regularly train personnel on all questions pertaining to the locally applicable regulations on occupational safety and environmental protection, especially on pressure-retaining pipelines.

# 3 Transport and storage

- Protect the product against external force during transport (impact, stroke, vibrations etc.).
- Transport and/or store product in its unopened original packaging.
- Protect the product from dust, dirt, moisture as well as heat and ultraviolet radiation.
- Ensure that the product has not been damaged neither by mechanical nor thermal influences.
- Check the product prior to assembly on transport damages.

# 4 Design

## 4.1 Pressure reducing valve

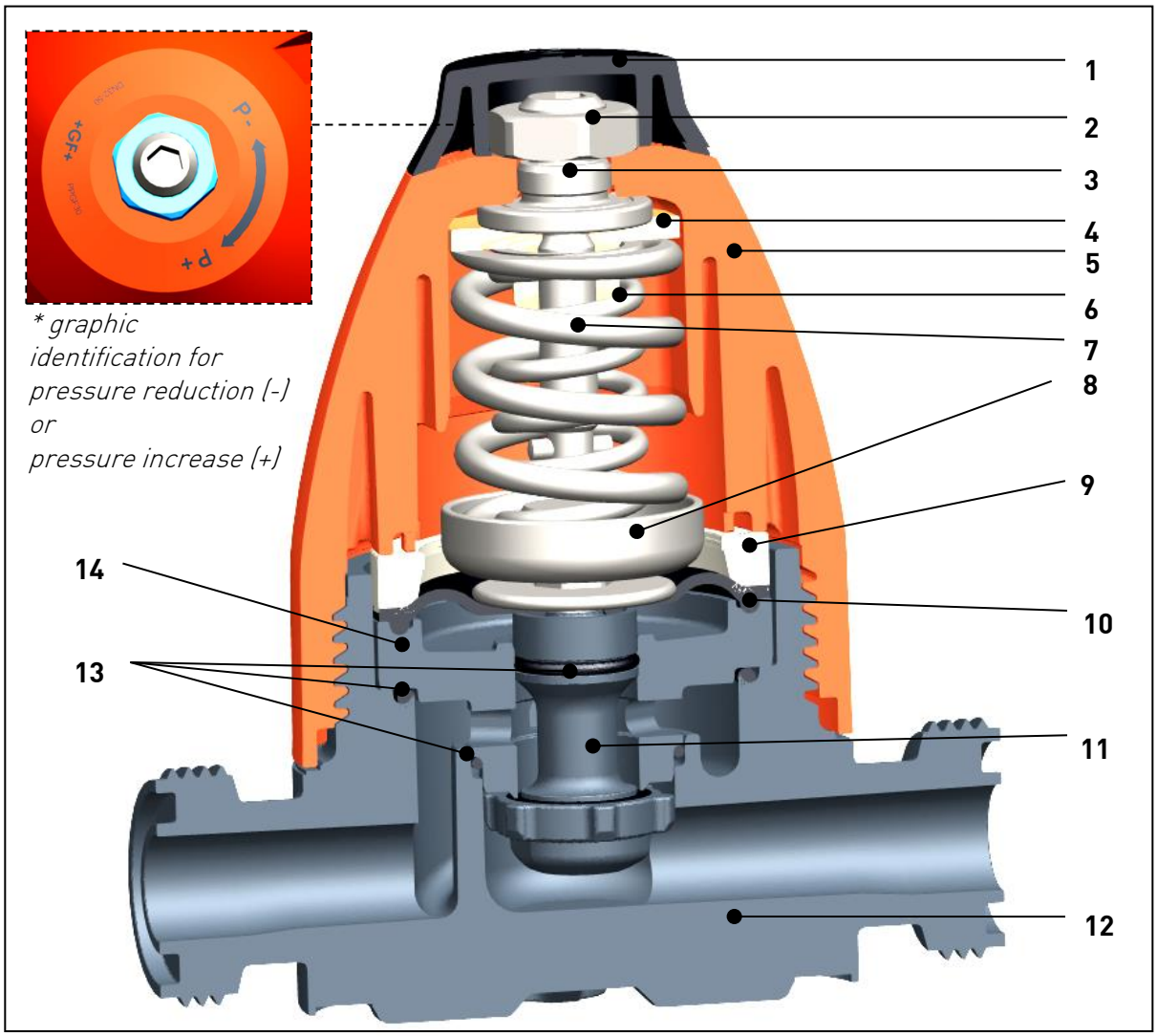


| | | | |
|---|---|---|---|
| **1** | Cap | **8** | Compression piece |
| **2** | Locking nut | **9** | Retaining ring |
| **3** | Spindle/adjusting screw | **10** | Diaphragm |
| **4** | Spring retainer | **11** | Piston |
| **5** | Bonnet assembly (top part) * | **12** | Body |
| **6** | Inner spring | **13** | O-rings |
| **7** | Outer spring | **14** | Inner body |

*Diaphragm, O-rings, diaphragm washer, inner body and piston constitute the cartridge.*

## 4.2 Pressure retaining valve

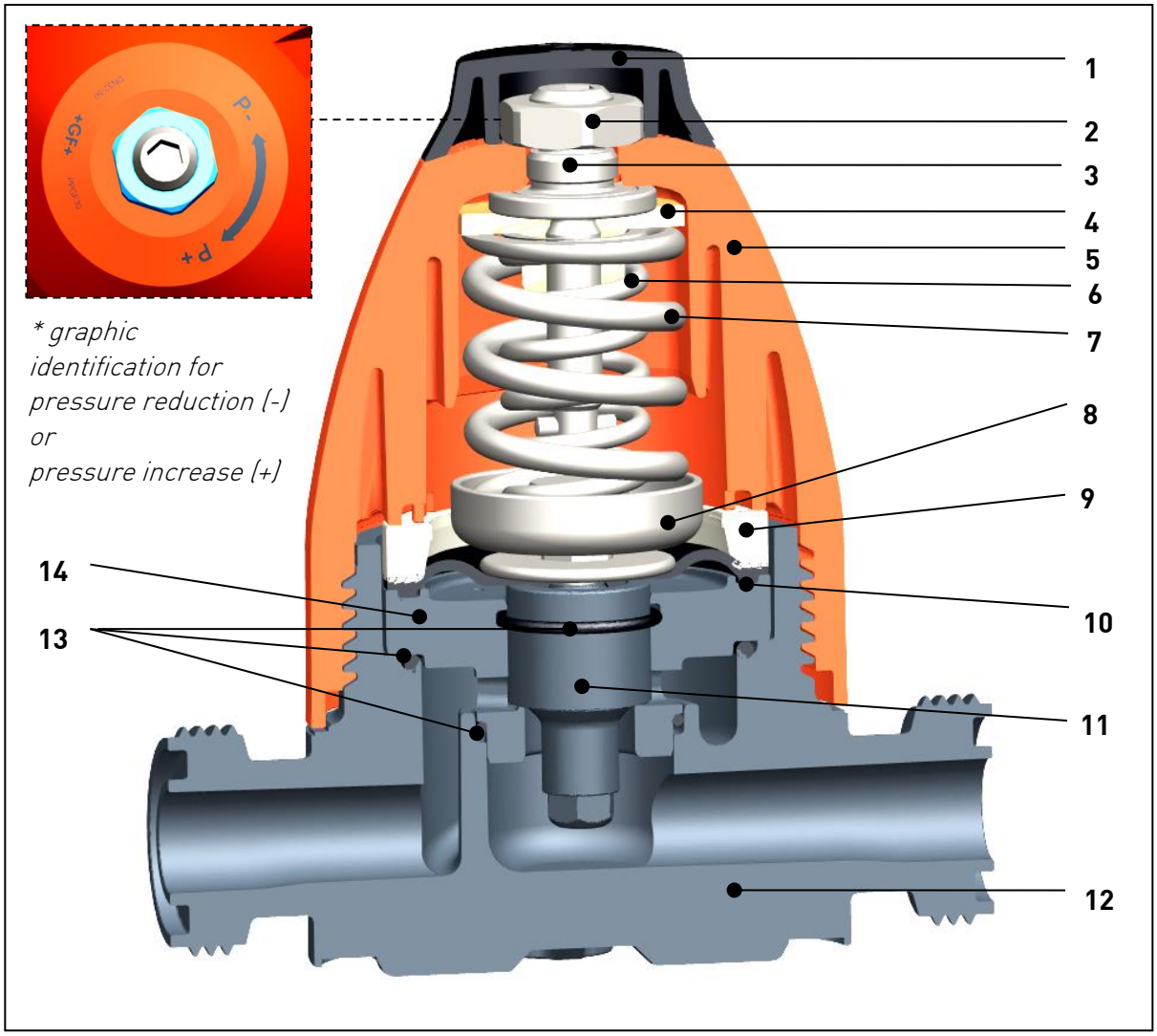


| | | | |
|---|---|---|---|
| **1** | Cap | **8** | Pressure piece |
| **2** | Locking nut | **9** | Retaining ring |
| **3** | Spindle/adjusting screw | **10** | Diaphragm |
| **4** | Spring retainer | **11** | Piston |
| **5** | Bonnet assembly (top part)* | **12** | Body |
| **6** | Inner spring | **13** | O-rings |
| **7** | Outer spring | **14** | Inner body |

*Diaphragm, O-rings, diaphragm washer, inner body and piston constitute the cartridge.*

## 4.3 Manometer

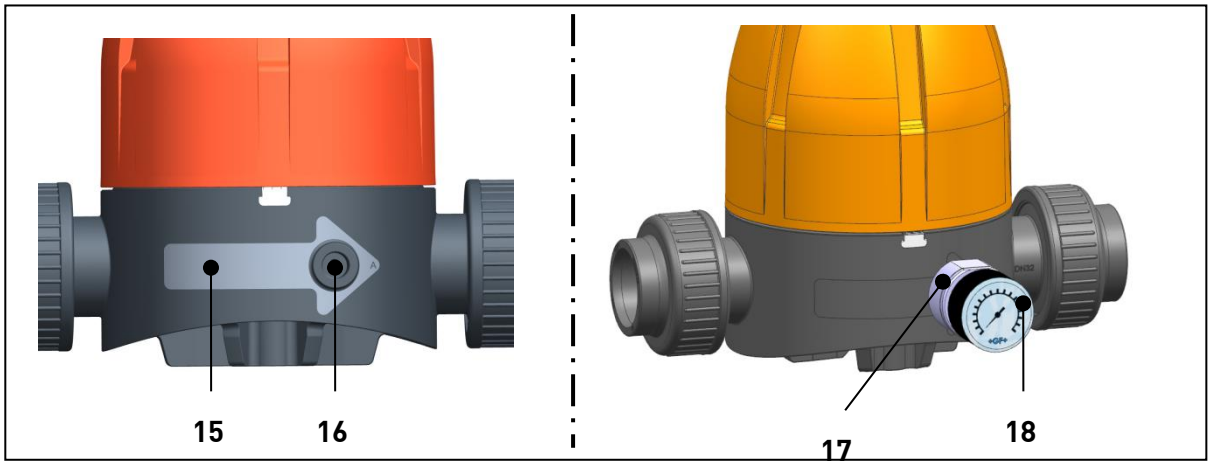


| | | | |
|---|---|---|---|
| **15** | Indication of flow direction | **17** | Manometer adaptor (optional) |
| **16** | Manometer socket | **18** | Manometer |

*If pressure reducing valve type 582/pressure retaining valve type 586 is a manometer version, then the manometer is already fitted at the factory.*

# 5 Function

## 5.1 Pressure reducing valve

On the side of the valve outlet, the pressure acts via the diaphragm on the adjustable spring. A balance of forces is established via the preloaded spring, which is set with the adjusting screw at the valve. If the outlet pressure increases above the specified value, the piston is lifted against the spring force. The valve closes, and the outlet pressure is reduced. If the outlet pressure decreases below the value, the piston is pushed down by the spring resistance. The valve begins to open, until the balance is reached again. Independent of an increasing or decreasing inlet pressure, the outlet pressure remains constant to the greatest possible extent, because it is not directly related to the inlet pressure.

## 5.2 Pressure holding valve

The desired pressure in the valve inlet pipe is set by the adjustable spring force. If the inlet pressure rises above the set value, e.g. due to an over capacity of the pump, the valve piston is lifted against the spring force. Consequently, the valve opens, and there is a reduction of pressure in the outlet. If the pressure decreases in the valve inlet pipe, the spring resistance pushes the piston down in the direction of the valve seat and closes, as soon as the inlet pressure sinks below the preset spring tension. In this way, a constant pressure in the supply line is ensured.

# 6 Identification

## 6.1 Valve type/sealing material (O-rings)

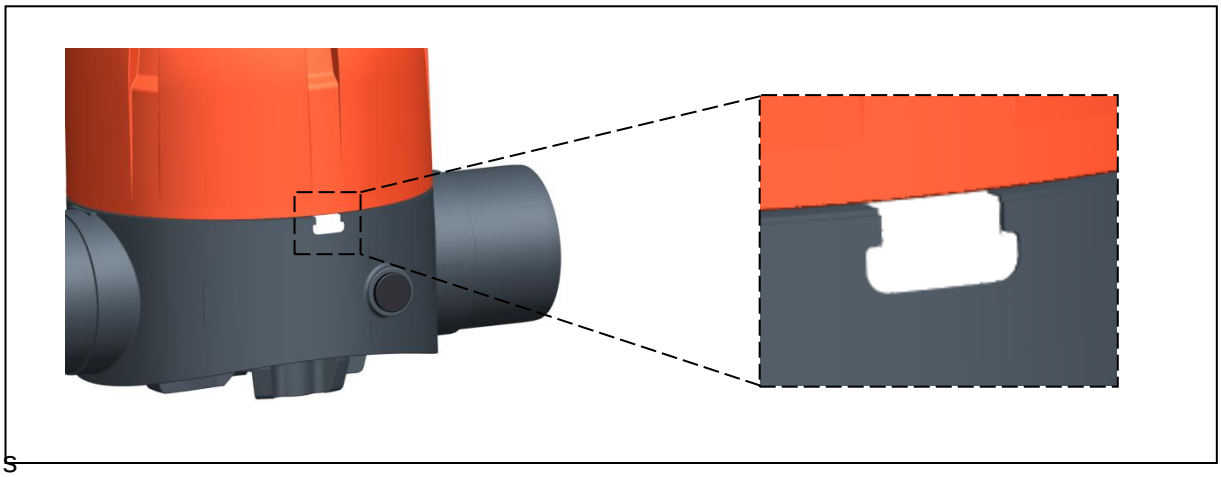

| Valve type | Sealing material | Colour of index plate |
|---|---|---|
| Pressure reducing valve type 582 | EPDM | white |
| Pressure reducing valve type 582 | FKM | green |
| Pressure retaining valve type 586 | EPDM | black |
| Pressure retaining valve type 586 | FKM | red |

# 7 Technical specifications

| | |
|---|---|
| **Dimensions** | DN 10-50 (3/8" – 2") |
| **Materials** | PVC-U, PVC-C, PP-H, PVDF |
| **Diaphragm** | EPDM/PTFE |
| **Gaskets** | EPDM, FKM |
| **Connections** | Fittings, spigots |
| **Pressure level (nominal pressure)** | PN 10 |
| **Adjustable pressure ranges** | 0.5 - 9 bar / optional 0.3 - 3 bar<br>(7 - 130 psi / optional 4 - 44 psi) |
| **Hysteresis** | max. 0.5 bar (max. 6 psi) |
| **Pressure difference** | Pressure difference between inlet and outlet:<br>min. 1 bar |

# 8 Required tools

| Tool | DN 10/15 | DN 20/25 | DN 32/40/50 |
|---|---|---|---|
| Allen wrench | AF 6 | AF 8 | AF 10 |
| Open-end wrench | AF 19 | AF 24 | AF 30 |
| Hook wrench or strap wrench | 80 - 90 mm | 95 - 100 mm | 135 - 145 mm |
| Screw driver | Size 1 | | |
| Fixing unit, e.g. jaw vice | no difference | | |

# 9 Installation

**WARNING – ONLY FOR MANOMETER VERSION**

**Danger of material damage and/or injury due to changes of the manometer! Valid for versions with and without adaptor.**

- The manometer is installed, preset and checked at the factory. Therefore, ensure that no changes are made at the manometer.

The valve bodies are suited for various connection types:

Connection: radial installation and removal

Connection: spigot ends

*Pressure reducing valves type 582/pressure retaining valves type 586 are supplied with released spring.*

- Ensure that pressure reducing valve type 582/pressure retaining valve type 586 is suited for operating conditions, see label.
- Check pressure reducing valve type 582/pressure retaining valve type 586 on damages before installation. Do not use any damaged or faulty product.
- Ensure that the installation of pressure reducing valve type 582/pressure retaining valve type 586 is carried out without tension.
- In order to ensure an optimum flow rate, ensure that
  - pressure reducing valve type 582/pressure retaining valve type 586 is installed in a section of the pipeline that is not subjected to turbulent flow and that
  - bends, restrictions, shut-off devices have a minimum distance of 10 x DN from pressure reducing valve type 582/pressure retaining valve type 586.
- Observe the flow direction, see arrow on body (Fig. 1)

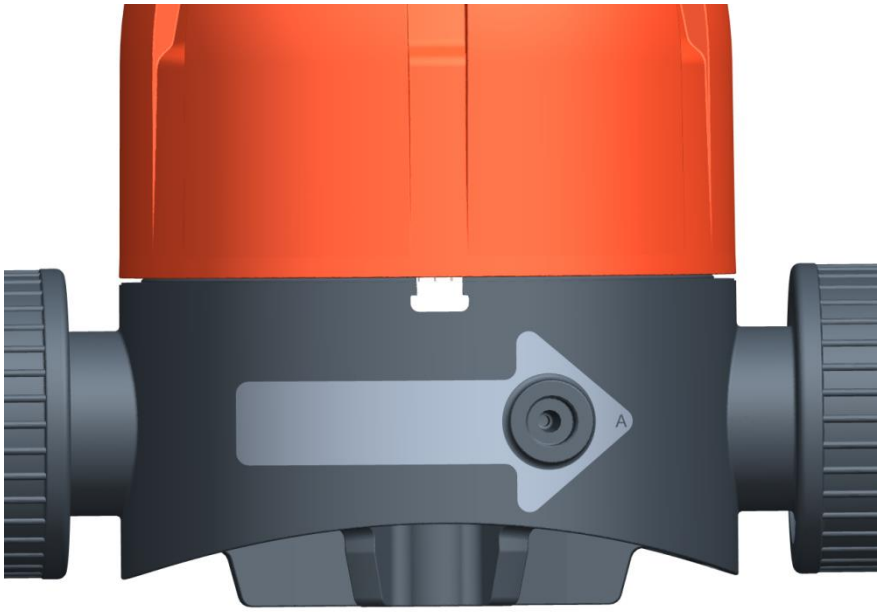


Fig. 1

- Observe connection types, see versions of „radial installation and removal“ and „spigot ends“.

**Type „Radial installation and removal“:**

- Loosen the coupling nut and slide it on the intended pipe end.
- Connect the connection parts with the pipe ends. For instructions concerning the different connection types, see planning fundamentals.
- Put pressure reducing valve type 582/pressure retaining valve type 586 between the connection parts.
- Tighten the coupling nuts by hand.

**„Spigot ends“:**

- If adapted to flange version, observe the tightening torques of the flanges, see „Georg Fischer planning fundamentals“.

*In order to protect against soiling and premature wear and tear by erosion, we recommend installing a strainer on the inlet side of pressure reducing valve type 582/pressure retaining valve type 586.*

**Cemented connection**

- Only join identical materials.
- After the curing time of the joint has elapsed, rinse the pipe section as quickly as possible with pressure-less water, see Chapter „Jointing techniques” in the „Georg Fischer planning fundamentals”

**Welded connection**

- Only join identical materials, see Chapter „Jointing techniques” in the „Georg Fischer planning fundamentals”.

# 10 Operation

## 10.1 Pressure test

- Ensure that the test pressure does not exceed 1.1 times the max. set back pressure.

## 10.2 Setting the working pressure

- Remove the cap from the bonnet assembly (top part), see Fig. 2. To do so, position the screw driver in the notch of the cap.

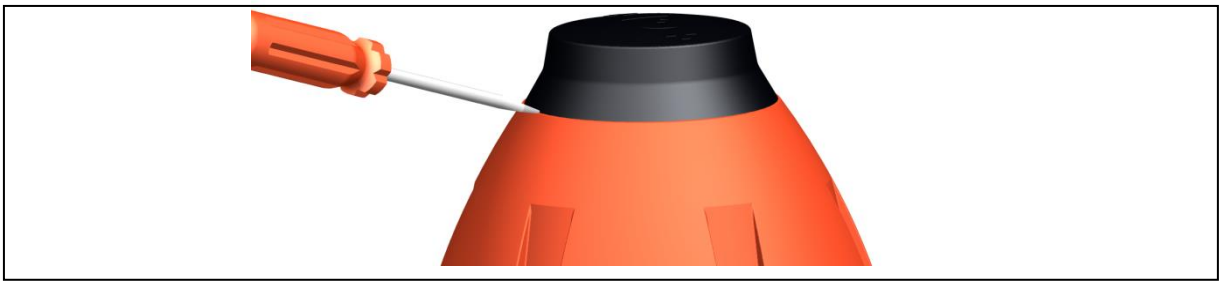

Fig. 2

- Loosen the locking nut, see Fig. 3

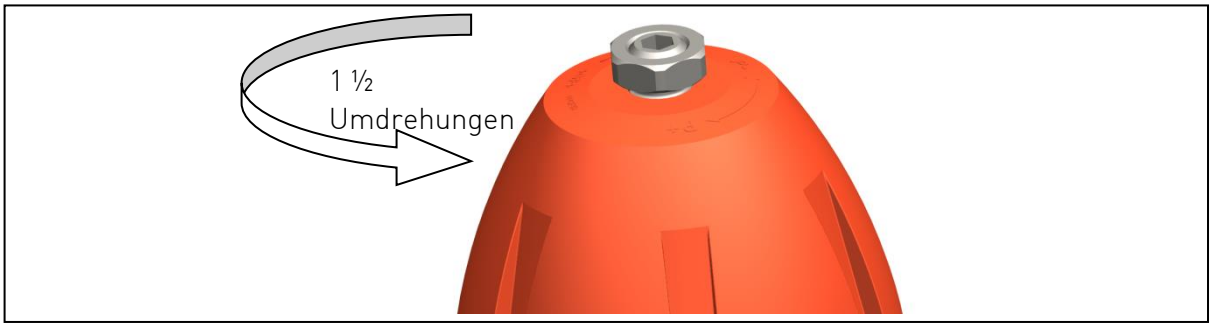


Fig. 3

- In order to increase the setpoint value: Tense the spring. To do so, turn the spindle clockwise, see Fig. 4

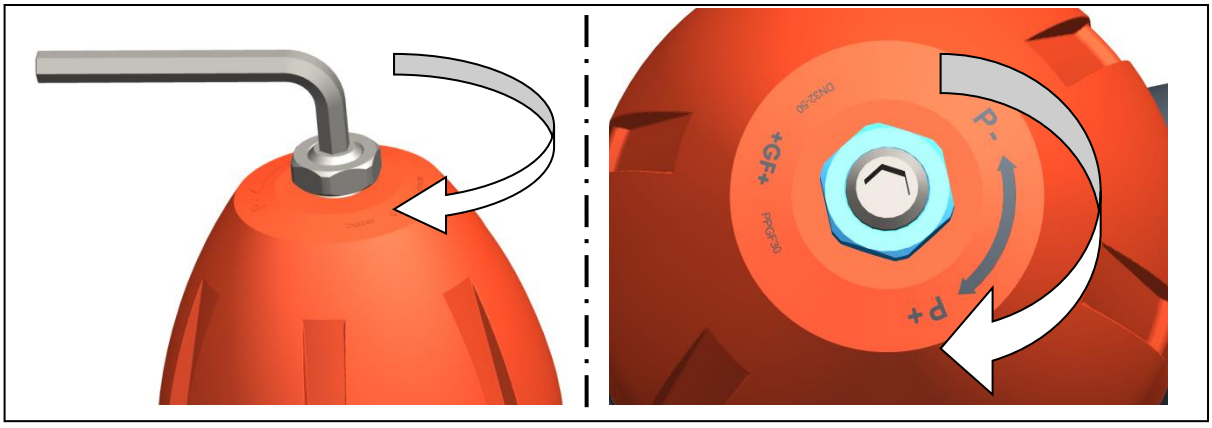


Fig. 4

- In order to decrease the set point value: Relax the spring. To do so, turn the spindle counterclockwise, see Fig. 5

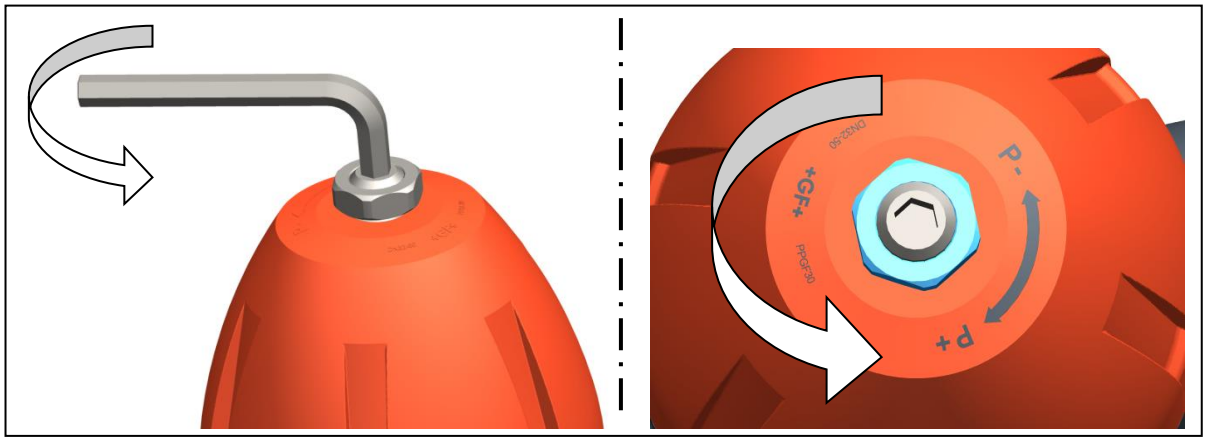


Fig. 5

- Ensure that the set point value is set. To do so, read the set point value at the manometer or the corresponding indicator.

**CAUTION**

**Displacement of the set point value of pressure reducing valve type 582/ pressure retaining valve type 586 due to wrong locking.**

- Fix the spindle with Allen wrench and simultaneously tighten the locking nut with a suited tool, see Fig 6

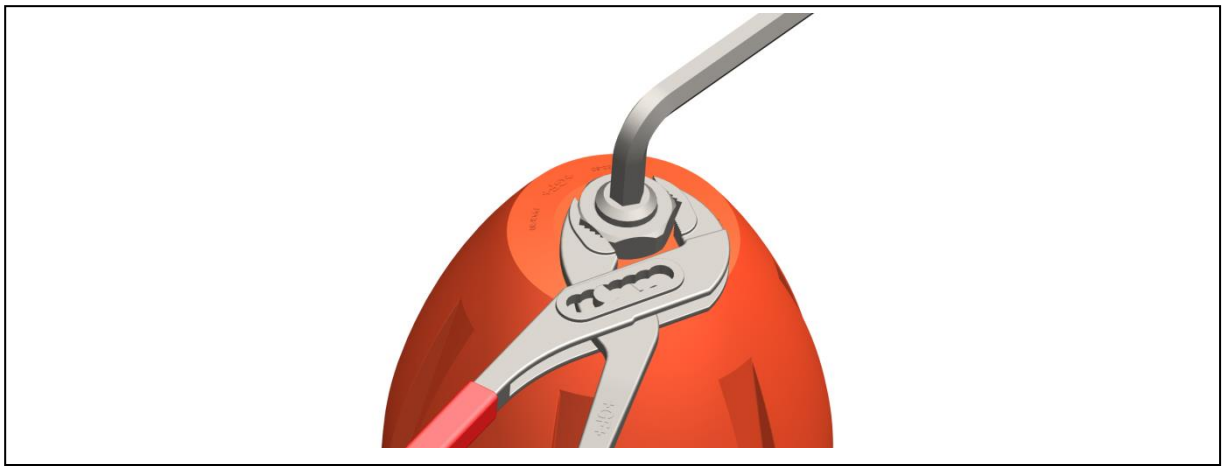

Fig. 6

- Put the cap onto the bonnet assembly (top part).

# 11 Maintenance

**WARNING**

**Risk of injury due to uncontrolled evasion of the medium!**

If the pressure was not relieved completely, the medium can evade uncontrolled.

- Completely relieve pressure in the pipes prior to dismounting/maintenance/dismantling.
- In case of harmful, flammable, or explosive media: Completely empty and rinse pipe prior to dismounting. Pay attention to potential residues.
- Make sure that the medium is caught safely with the appropriate measures.

*Difficult opening, due to pretensioned spring.* Make sure that the spring is completely relaxed before opening the bonnet assembly (top part). To do so, turn the spindle counterclockwise (P-), up to the end position.

**CAUTION**

**Risk of injury and missing product quality through use of spare parts that have not been provided by GF Piping Systems!**

- Only use the listed spare parts, see Chapter List of Spare Parts.

- Set maintenance intervals as per the conditions of use (e.g. actuating cycles, medium, ambient temperature).
- As part of the regular system inspection, carry out the following maintenance activities.

| Maintenance interval | Maintenance activity |
|---|---|
| regular | ▶ Check sealing element, piston, diaphragm on functionality and replace, if necessary |
| regular | ▶ Check tightness of housing, pipe connection and control line. |
| regular | ▶ Clean the inner body |

## 11.1 Replacing diaphragm and O-ring

- Remove the valve from the pipeline and bring it into horizontal position.

### 11.1.1 Disassembly

- Prior to dismantling: Mark the position of bonnet assembly (top part) to body on the housing.
- Remove the cap from the bonnet assembly (top part), see Fig. 2. To do so, use a screw driver.
- Relax the spring. To do so, turn the spindle counterclockwise (P-), up to the end position.
- Fix the body with a suited tool and loosen the bonnet assembly (top part). To do so, turn the bonnet assembly (top part) counterclockwise, see Fig. 7. During this, the seal sticker will be broken.

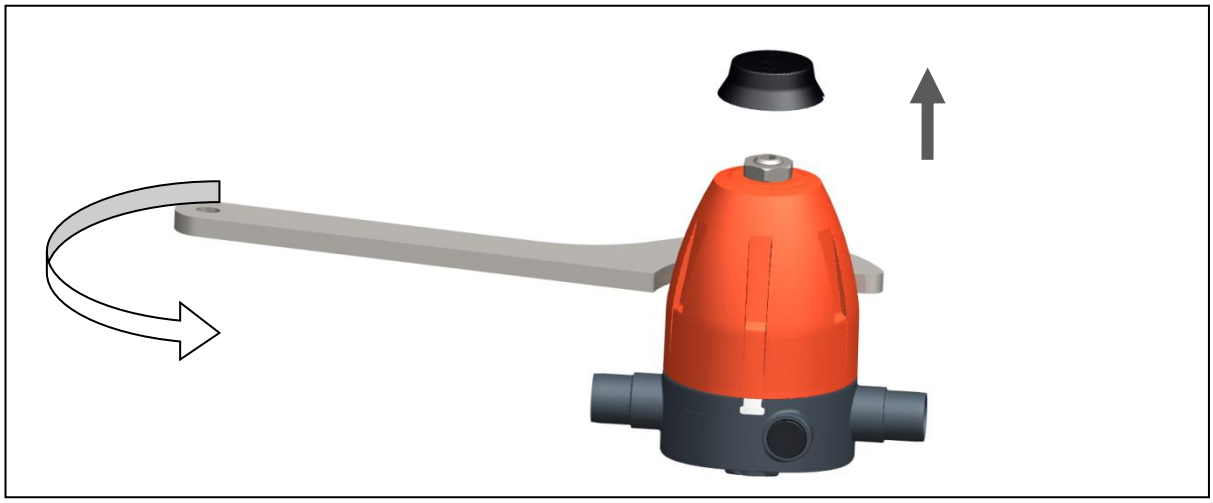

Fig. 7

- Remove Pressure piece, springs and retaining ring, see Fig. 8
- Optional version 0.3 - 3 bar (4 - 44 psi): one spring

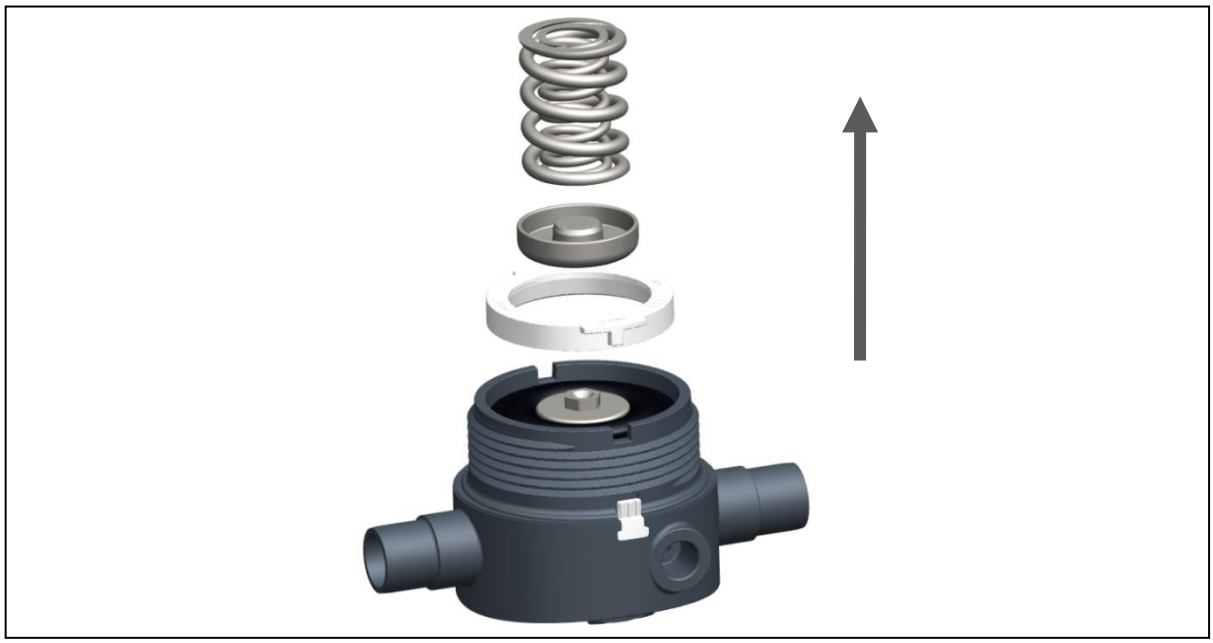

Fig. 8

- Remove cartridge from body with suited tool (e.g. pliers), see Fig. 9

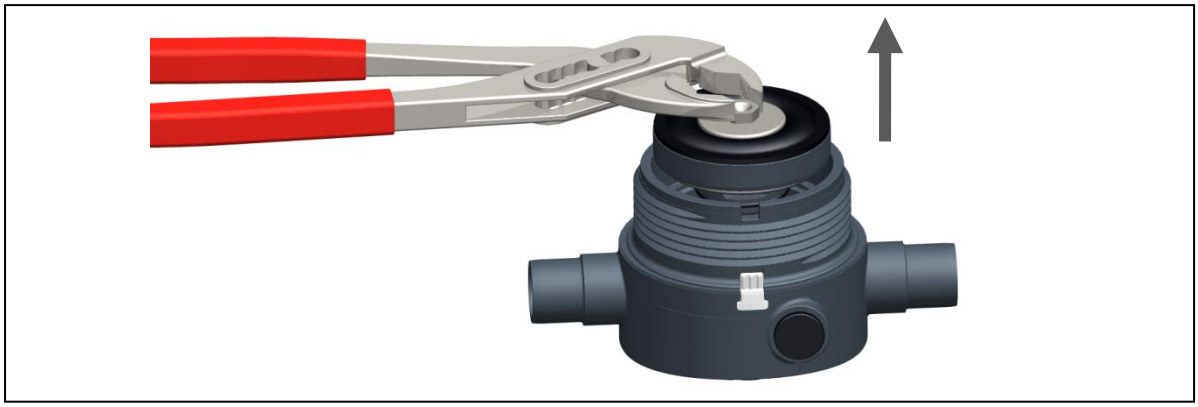

Fig. 9

- Remove 2 O-rings from body, see Fig. 10

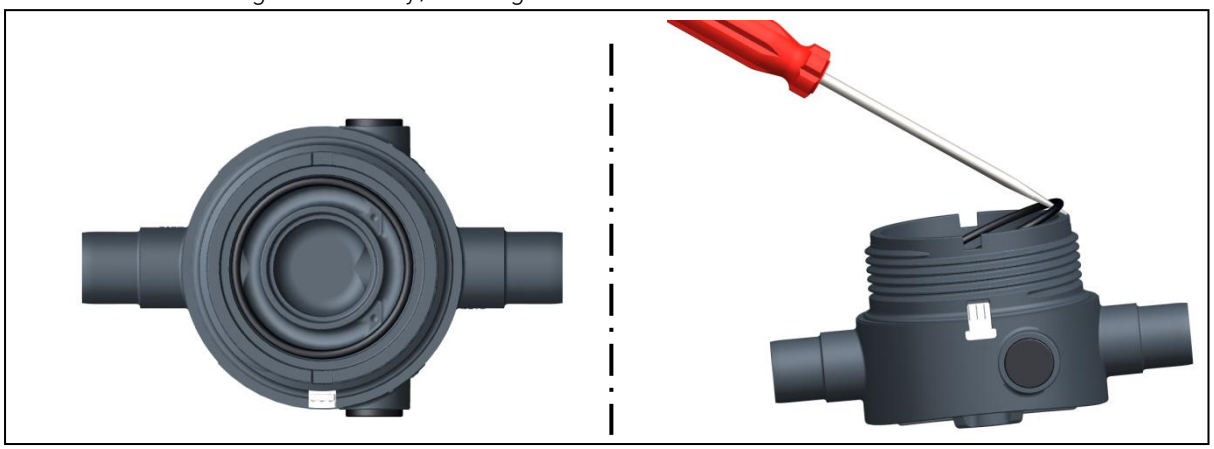

Fig. 10

- In order to replace diaphragm: Replace cartridge, see Chapter "spare parts"

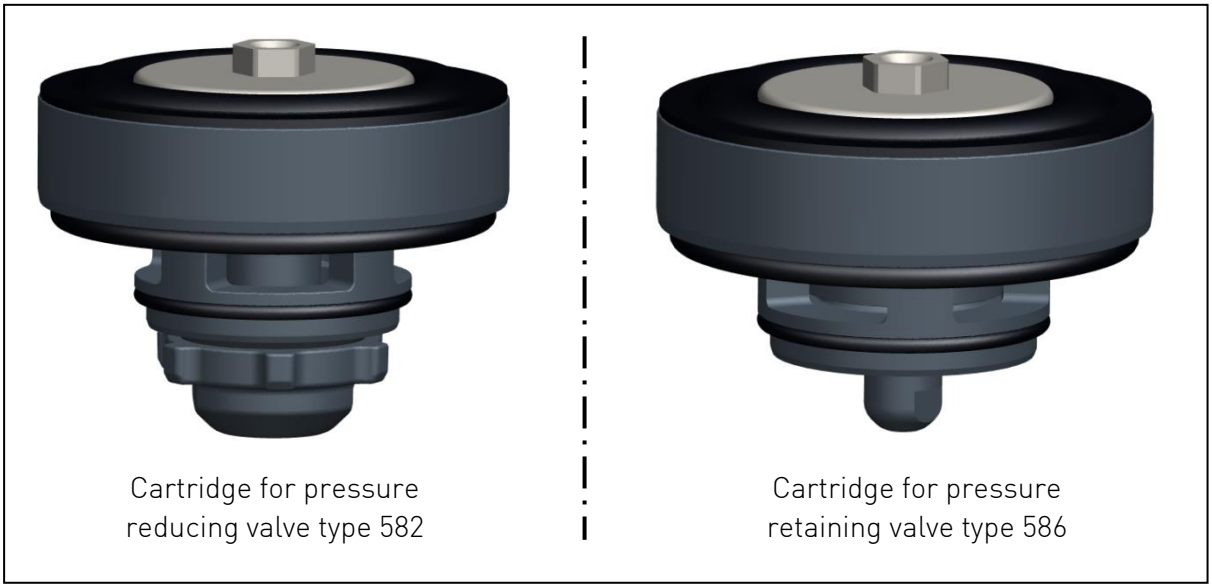


Fig. 11

### 11.1.2 Assembly

- Ensure that 2 O-rings sit correctly in the body.
- Position the cartridge in the body and push in, see Fig. 12
- Replace the index plate in case of valve type or elastomer change

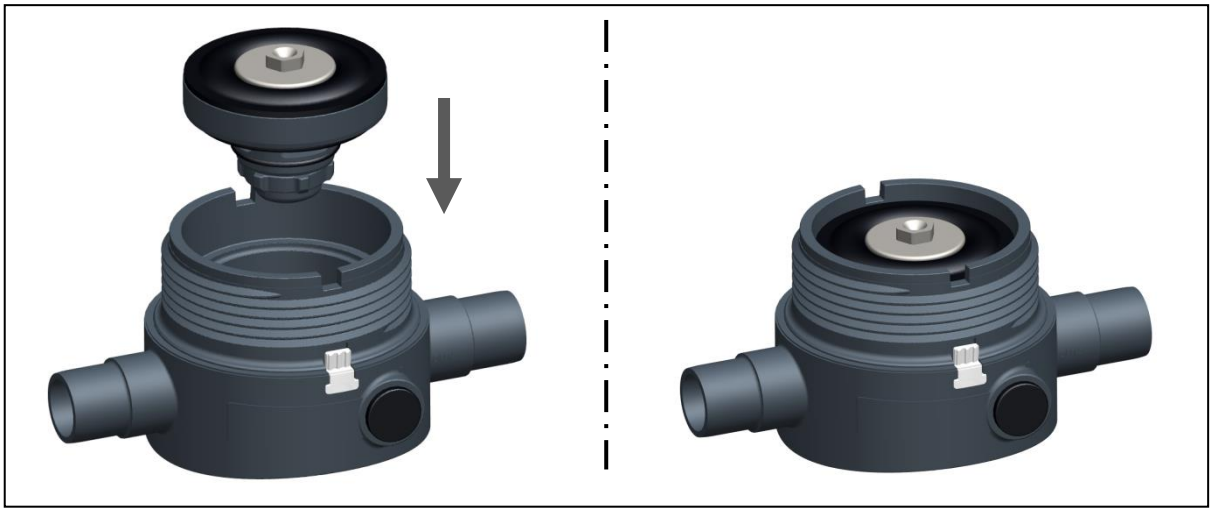

Fig. 12

- Place the retaining ring. During this, ensure that both projections of the retaining ring lie in the notches of the body, see Fig. 13

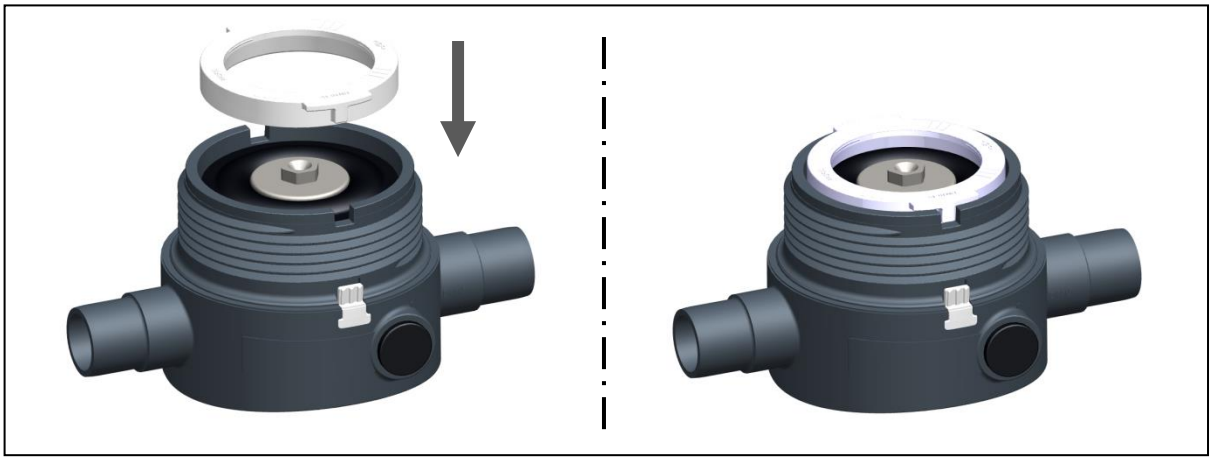

Fig. 13

- Put the Pressure piece on the cartridge, see Fig 14

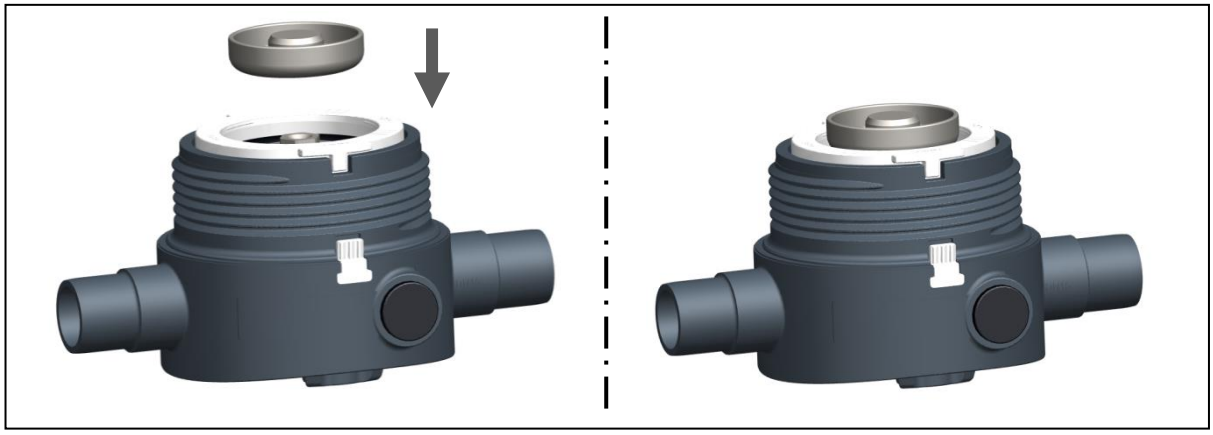

Fig. 14

- Put the springs on the Pressure piece, see Fig 15

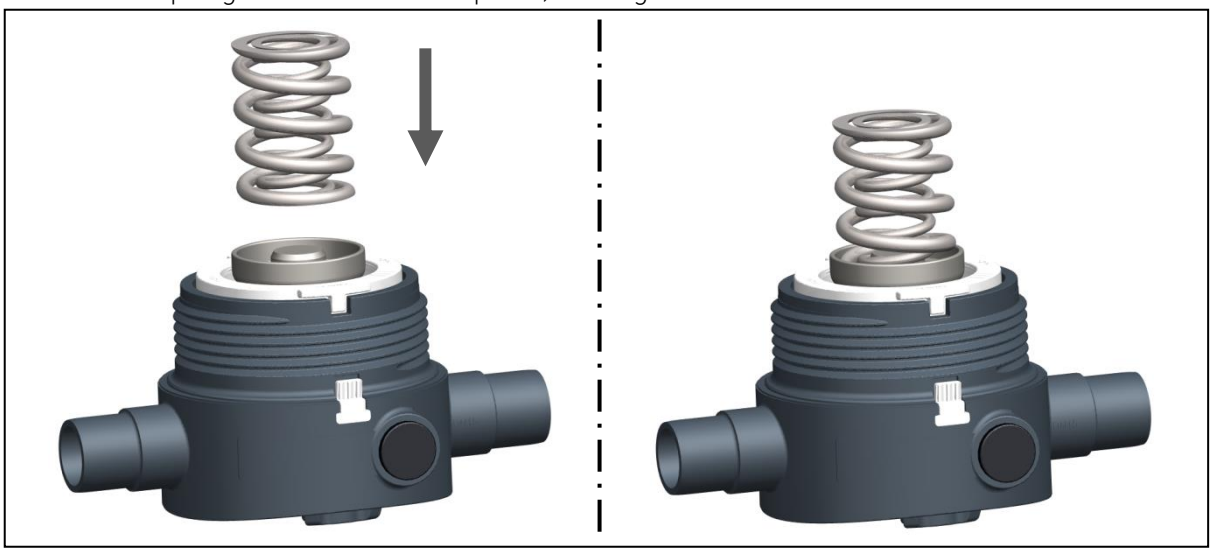

Fig. 15

- Put the bonnet assembly (top part) onto the body.
- Fix the body and tighten up to the marking/old seal sticker (see Chapter 11.1.1) +20°:

| DN 10/15 | DN 20/25 | DN 32/40/50 |
|---|---|---|
| 50Nm | 70Nm | 120Nm |

- Clearance check between top part and body

| DN 10/15 | DN 20/25 | DN 32/40/50 |
|---|---|---|
| 0.5 mm | 0.6 mm | 0.9 mm |

- Install the valve into the pipeline, see Chapter 9 „Installation“
- Fix the spindle with Allen wrench and simultaneously tighten the locking nut with a suited tool.
- Setting the working pressure, see Chapter 10.2 "Setting the working pressure"

## 11.2 Cleaning the inner body

- Dismantling, see Chapter 11.1.1 "Disassembly"
- Check and clean the area of the seat gasket, see Fig. 16

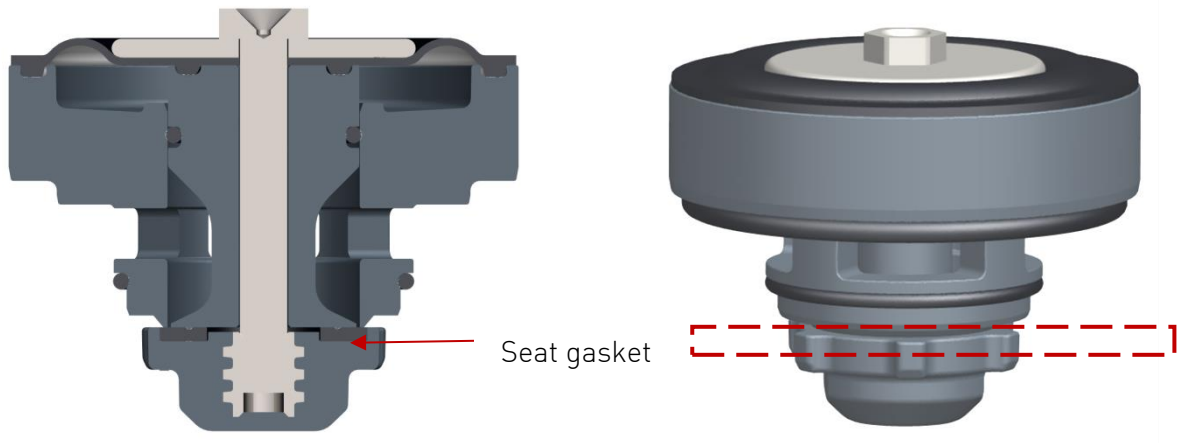


*Example: Pressure reducing valve type 582*

Fig. 16

- Clean the drill holes of the inner housing, see Fig. 17

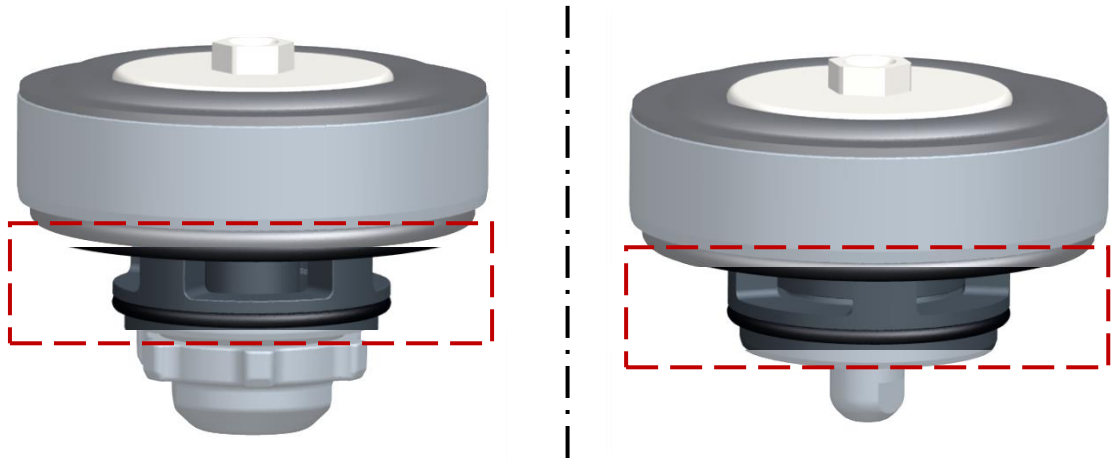

Pressure reducing valve type 582

Pressure retaining valve type 586

Fig. 17

# 12 Troubleshooting

| Fault | Possible cause | Troubleshooting |
|---|---|---|
| Leak at pipe | Leaking connections | Check bonding or welding and repair, if necessary<br>Check gaskets and replace, if necessary |
| Leak between top part and body | Retaining ring not correctly inserted | Position the retaining ring so both projections of the retaining ring lie in the notches of the body |
| | Bonnet assembly (top part) loose | Retighten bonnet assembly (top part) |
| Leak at bonnet assembly (top part) | Piston screw loose | Retighten piston screw |
| | Diaphragm damaged | Replace diaphragm, see Chapter 11 |
| | Control element (diaphragm, piston, sealing element) defective | Replace cartridge. |
| Set point value not reached<br><br>(only valid for pressure reducing valve type 582) | Foreign body jammed, preventing tight closing | Tense the spring, so the valve opens and the foreign body is flushed out (caution: pressure increase) |
| | Impure function parts | Clean pressure reducing valve type 582, see Chapter 11.2 |
| Inertia too high, set point value not reached | Valve undersized | Check valve dimensioning (kvs value) |
| Valve does not react to compressed air | Valve is not dimensioned for compressed air, and therefore has no compressed air connection | Remove compressed air and select other valve (e.g. pneumatic diaphragm valve) for the application |

| Fault | Possible cause | Troubleshooting |
|---|---|---|
| Loud noise | Valve oversized. Thus, the valve only opens a minimum, leading to vibrations | Check valve dimensioning (kvs value) |
| | Valve undersized. This results in excessive flow velocities inside the valve | Check valve dimensioning (kvs value) |
| Excessive damage of pressure reducing valve type 582/pressure retaining valve type 586 | Dirty medium, corrosion deposits or foreign matter. | Install strainer |
| Manometer does not indicate anything | Manometer defective | Replace manometer |
| | Buffer medium escaped from the manometer adaptor | Check manometer adaptor and replace, if necessary |
| Manometer stays on a constant value | Manometer defective | Replace manometer |
| | Drill holes in the cartridge clogged | Clean cartridge, see Chapter 11.2 „Cleaning the inner body“ |
| Bonnet assembly (top part) cannot be screwed onto the body | Spring not relieved<br>Spring cap is not in the end stop, see Fig. 18<br> <br>Fig.18 | Screw spring cap into the end position, see Fig 19<br> <br>Fig.19 |

# 13 Spare Parts

Order spare parts as follows:

- Identify valve type and sealing material by means of index plate, see Chapter 6.1. Sealing material.
- Read DN size at body.
- Read designation of spare part, see Chapter 4.1 or 4.2.
- Send the order with these details and the required quantity to the agency of GF Piping Systems.

# 14 Accessories

| Designation | Article number | | |
|---|---|---|---|
| | DN 10/15 | DN 20/25 | DN 32/40/50 |
| Hook wrench | 198 806 451 | 198 806 452 | 198 806 453 |
| Manometer adaptor | 198 806 650 | | |
| Manometer brass | 198 806 651 | | |
| Manometer stainless steel | 198 806 652 | | |
| Manometer sealing plug | 198 806 653 | | |

# 15 Disposal

- Before disposing of the different materials, separate them by recyclables, normal waste and special waste.
- Comply with local legal regulations and provisions when recycling or disposing of the product, the individual components and the packaging.
- Comply with national regulations, standards and directives.

**WARNING**

**Parts of the product may be contaminated with media that are harmful for the health and the environment. Therefore, a simple cleaning is not sufficient!**

Danger of personal injury and damage to the environment caused by those media.

Prior to disposing of the product:

- Collect leaking media and dispose of according to the local regulations. Consult the safety data sheet.
- Neutralize possible media residues in the product.
- Separate materials (plastics, metals etc.) and dispose of according to the local regulations.

If you have questions regarding the disposal of your product, please contact your national GF Piping Systems representative.

# 16 EC Manufacturer's declaration

The manufacturer, Georg Fischer Rohrleitungssysteme AG, 8201 Schaffhausen (Switzerland), declares that, due to the exclusion of the use for flammable or gaseous media and because of their nominal diameter and pressure level, the pressure regulating valves are not subject to Pressure Equipment Directive 2014/68/EU.

Changes to the pressure regulating valve that could affect the stated technical specifications and the intended use, void this manufacturer's declaration.

Name: Bastian Lübke

Position: R&D Manager Georg Fischer Piping Systems

Date: 2017-02-22

# Worldwide at home

Our sales companies and representatives
ensure local customer support in over 100 countries

**www.gfps.com**


**Argentina / Southern South America**
Georg Fischer Central Plastics Sudamérica S.R.L.
Buenos Aires, Argentina
Phone +54 11 4512 02 90
gfcentral.ps.ar@georgfischer.com
www.gfps.com/ar

**Australia**
George Fischer Pty Ltd
Riverwood NSW 2210 Australia
Phone +61 (0) 2 9502 8000
australia.ps@georgfischer.com
www.gfps.com/au

**Austria**
Georg Fischer Rohrleitungssysteme GmbH
3130 Herzogenburg
Phone +43 (0) 2782 856 43-0
austria.ps@georgfischer.com
www.gfps.com/at

**Belgium / Luxembourg**
Georg Fischer NV/SA
1600 Sint-Pieters-Leeuw / Belgium
Phone +32 (0) 2 556 40 20
Fax +32 (0) 2 524 34 26
be.ps@georgfischer.com
www.gfps.com/be

**Brazil**
Georg Fischer Sist. de Tub. Ltda.
04571-020 São Paulo/SP
Phone +55 (0) 11 5525 1311
br.ps@georgfischer.com
www.gfps.com/br

**Canada**
Georg Fischer Piping Systems Ltd
Mississauga, ON L5T 2B2
Phone +1 (905) 670 8005
Fax +1 (905) 670 8513
ca.ps@georgfischer.com
www.gfps.com/ca

**China**
Georg Fischer Piping Systems Ltd
Shanghai 201319
Phone +86 21 3899 3899
china.ps@georgfischer.com
www.gfps.com/cn

**Denmark / Iceland**
Georg Fischer A/S
2630 Taastrup
Phone +45 (0) 70 22 19 75
info.dk.ps@georgfischer.com
www.gfps.com/dk

**Finland**
Georg Fischer AB
01510 VANTAA
Phone +358 (0) 9 586 58 25
Fax +358 (0) 9 586 58 29
info.fi.ps@georgfischer.com
www.gfps.com/fi

**France**
Georg Fischer SAS
95932 Roissy Charles de Gaulle Cedex
Phone +33 (0) 1 41 84 68 84
fr.ps@georgfischer.com
www.gfps.com/fr

**Germany**
Georg Fischer GmbH
73095 Albershausen
Phone +49 (0) 7161 302 0
info.de.ps@georgfischer.com
www.gfps.com/de

**India**
Georg Fischer Piping Systems Pvt. Ltd
400 083 Mumbai
Phone +91 22 4007 2000
Fax +91 22 4007 2020
branchoffice@georgfischer.com
www.gfps.com/in

**Indonesia**
PT Georg Fischer Indonesia
Karawang 41371, Jawa Barat
Phone +62 267 432 044
Fax +62 267 431 857
indonesia.ps@georgfischer.com
www.gfps.com/id

**Italy**
Georg Fischer S.p.A.
20063 Cernusco S/N (MI)
Phone +39 02 921 861
it.ps@georgfischer.com
www.gfps.com/it

**Japan**
Georg Fischer Ltd
530-0003 Osaka
Phone +81 (0) 6 6341 2451
jp.ps@georgfischer.com
www.gfps.com/jp

**Korea**
Georg Fischer Korea Co. Ltd
Unit 2501, U-Tower
120 HeungdeokJungang-ro
(Yeongdeok-dong)
Giheung-gu, Yongin-si, Gyeonggi-do
Phone +82 31 8017 1450
Fax +82 31 217 1454
kor.ps@georgfischer.com
www.gfps.com/kr

**Malaysia**
George Fischer (M) Sdn. Bhd.
40460 Shah Alam, Selangor Darul Ehsan
Phone +60 (0) 3 5122 5585
Fax +60 (0) 3 5122 5575
my.ps@georgfischer.com
www.gfps.com/my

**Mexico / Northern Latin America**
Georg Fischer S.A. de C.V.
Apodaca, Nuevo Leon
CP66636 Mexico
Phone +52 (81) 1340 8586
Fax +52 (81) 1522 8906
mx.ps@georgfischer.com
www.gfps.com/mx

**Middle East**
Georg Fischer Piping Systems (Switzerland) Ltd
Dubai, United Arab Emirates
Phone +971 4 289 49 60
gcc.ps@georgfischer.com
www.gfps.com/int

**Netherlands**
Georg Fischer N.V.
8161 PA Epe
Phone +31 (0) 578 678 222
nl.ps@georgfischer.com
www.gfps.com/nl

**Norway**
Georg Fischer AS
1351 Rud
Phone +47 67 18 29 00
no.ps@georgfischer.com
www.gfps.com/no

**Philippines**
Georg Fischer Pte Ltd
Representative Office
Phone +632 571 2365
Fax +632 571 2368
sgp.ps@georgfischer.com
www.gfps.com/sg

**Poland**
Georg Fischer Sp. z o.o.
05-090 Sekocin Nowy
Phone +48 (0) 22 31 31 0 50
poland.ps@georgfischer.com
www.gfps.com/pl

**Romania**
Georg Fischer Piping Systems (Switzerland) Ltd
020257 Bucharest - Sector 2
Phone +40 (0) 21 230 53 80
ro.ps@georgfischer.com
www.gfps.com/int

**Russia**
Georg Fischer Piping Systems (Switzerland) Ltd
Moscow 125040
Phone +7 495 748 11 44
ru.ps@georgfischer.com
www.gfps.com/ru

**Singapore**
George Fischer Pte Ltd
11 Tampines Street 92, #04-01/07
528 872 Singapore
Phone +65 6747 0611
Fax +65 6747 0577
sgp.ps@georgfischer.com
www.gfps.com/sg

**Spain / Portugal**
Georg Fischer S.A.
28046 Madrid
Phone +34 (0) 91 781 98 90
es.ps@georgfischer.com
www.gfps.com/es

**Sweden**
Georg Fischer AB
117 43 Stockholm
Phone +46 (0) 8 506 775 00
info.se.ps@georgfischer.com
www.gfps.com/se

**Switzerland**
Georg Fischer Rohrleitungssysteme (Schweiz) AG
8201 Schaffhausen
Phone +41 (0) 52 631 3026
ch.ps@georgfischer.com
www.gfps.com/ch

**Taiwan**
Georg Fischer Co. Ltd
San Chung Dist., New Taipei City
Phone +886 2 8512 2822
Fax +886 2 8512 2823
www.gfps.com/tw

**United Kingdom / Ireland**
George Fischer Sales Limited
Coventry, CV2 2ST
Phone +44 (0) 2476 535 535
uk.ps@georgfischer.com
www.gfps.com/uk

**USA / Caribbean**
Georg Fischer LLC
9271 Jeronimo Road
92618 Irvine, CA
Phone +1 714 731 8800
Fax +1 714 731 6201
us.ps@georgfischer.com
www.gfps.com/us

**International**
Georg Fischer Piping Systems (Switzerland) Ltd
8201 Schaffhausen/Switzerland
Phone +41 (0) 52 631 3003
Fax +41 (0) 52 631 2893
info.export@georgfischer.com
www.gfps.com/int


The technical data are not binding. They neither constitute expressly
warranted characteristics nor guaranteed properties nor a guaranteed durability.
They are subject to modification. Our General Terms of Sale apply.

700.278.085
GFDO_6330_1a_2a_4a_6a (11.17)
© Georg Fischer Piping Systems Ltd
CH-8201 Schaffhausen/Switzerland, 2017
Printed in Switzerland

# PS75 – Rugged Cylindrical Pressure Switch

- Side Mounted DIN Connection
- Top Mounted Electrical Connection
- 5 to 6000 psi (0.35 to 414 bar)
- Wear Disc Design for Longer Life

Gems PS75 Series have all metal surfaces for overload stops and deliver reliable operation under extremely high pressure surges. They are designed with a wear disc and cushioning ring for increased life. The switches use a piston/diaphragm design, which combine the high proof pressure of piston technology with the sensitivity of a diaphragm design. They can be field or factory adjusted.

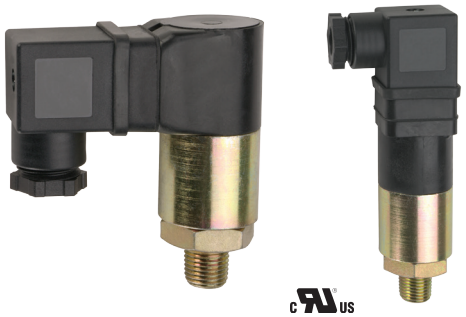

## Specifications

| | |
|---|---|
| **Switch** | SPST; SPDT |
| **Repeatability** | See Table 1 |
| **Wetted Parts** | |
| **Diaphragm** | Nitrile (optional Viton®, Neoprene or EPDM) |
| **Fitting** | Zinc-Plated Steel (optional 316 Stainless Steel) |
| **Housing** | Brass or Zinc-Plated Steel (optional 316 Stainless Steel) |
| **Electrical Termination** | DIN 43650A IP65; Conduit with Flying Leads IP65; Flying Leads IP65 |
| **Proof Pressure** | 7500 psi (517 bar) except range 10: 500 psi (35 bar) |
| **Burst Pressure** | 9000 psi (621 bar) |
| **Approvals** | CE, UL Approved units available |
| **Weight, Approximate** | Steel: 0.6 lbs. (0.27 kg) |

### Recommended Operating Temperature Limits

| | Circuit Codes | |
|---|---|---|
| **Diaphragm Material** | **-A, -B, -C** | **-A, -B, -C with -RD option** |
| **Nitrile (Std)** | 15°F to 185°F (-9°C to +85°C) | 15°F to 250°F (-9°C to +121°C) |
| **Viton®** | 0°F to 185°F (-18°C to +85°C) | 0°F to 250°F (-18°C to +121°C) |
| **EPDM** | -10°F to +185°F (-23°C to +85°C) | -10°F to +250°F (-23°C to +121°C) |
| **Neoprene** | -10°F to +185°F (-23°C to +85°C) | -10°F to +250°F (-23°C to +121°C) |

Note: Switches may function below the cold temperature limit but the set points and deadband will increase. Consult factory for details.

### Electrical Switch Ratings

| Circuit Code | AC | DC |
|---|---|---|
| **-A, -B, -C[1]** | 5 amps @ 125/250 Volts | 5 amps resistive, 3 amps inductive @ 28 Volts |
| **-A, -B, -C[2]** | 1 amp @ 125 Volts | 1 amp resistive, 0.5 amp inductive @ 28 Volts |

Notes:
1. Without Gold Contacts Option (-G).
2. With Gold Contacts Option (-G).

## Dimensions

**Right Angle DIN 43650A with Cable Clamp**

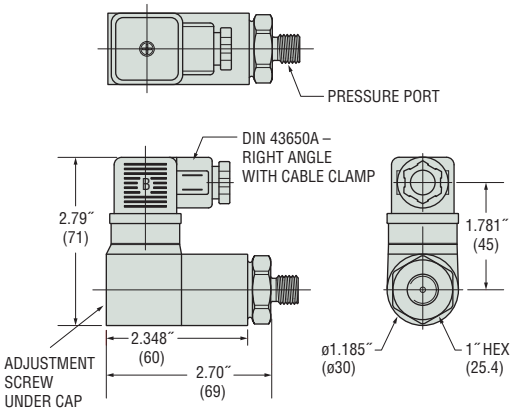


**Flying Lead**

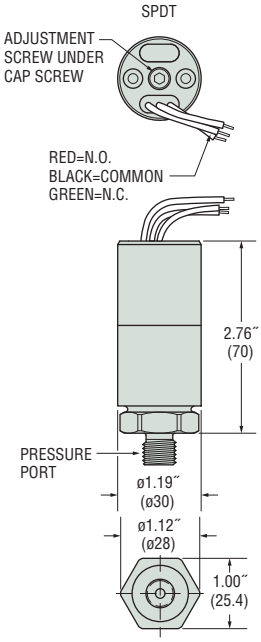


PRESSURE SWITCHES

## How To Order

Use the **Bold** characters from the chart below to construct a product code. Please reference Notes.

**PS75 -10 -4MNZ -C -H -XX -XXXX**

(1) (2) (3) (4) (5) (6)

**(1) Pressure Range Code**
Insert Pressure Range Code from Table 1, below.

**(2) Pressure Fitting[1]**

12L14 Zinc-Plated Steel
- **-2MNZ** = 1/8″ NPTM
- **-4MNZ** = 1/4″ NPTM
- **-4FNZ** = 1/4″ NPTF
- **-4MGZ** = 1/4″ BSPM (G type)
- **-4FGZ** = 1/4″ BSPF (G type)
- **-4MSZ** = 7/16″-20 SAE Male
- **-6MSZ** = 9/16″-18 SAE Male
- **-4SSZ** = 7/16″-20 SAE Male Swivel

316 Stainless Steel
- **-4MNS** = 1/4″ NPTM
- **-4MGS** = 1/4″ BSPM (G type)
- **-4FGS** = 1/4″ BSPF (G type)
- **-4FNS** = 1/4″ NPTF
- **-6MSS** = 9/16″-18 SAE Male

**(3) Circuit**
- **-A** = SPST/N.O.
- **-B** = SPST/N.C.
- **-C** = SPDT

**(4) Electrical Termination**
- **-FLXX** = Flying Leads[2]
- **-FLSXX** = Flying Leads w/PVC Shrink Tubing[2]
- **-ELXX** = 1/2″ NPT Male Conduit w/Flying Leads[3]
- **-H** = DIN 43650A Male Half Only[4]
- **-HR** = Right Angle DIN 43650A Male Half Only[4]
- **-HC** = DIN 43650A 9mm Cable Clamp[4]
- **-HCR** = Right Angle DIN 43650A 9mm Cable Clamp[4]
- **-HN** = DIN 43650A with 1/2″ Female NPT Conduit[4]
- **-HNR** = Right Angle DIN 43650A with 1/2″ Female NPT Conduit[4]

**(5) Options**
- **-V** = Viton® Diaphragm
- **-N** = Neoprene Diaphragm
- **-E** = EPDM Diaphragm
- **-G** = Gold Contacts (for loads less than 12 mA @ 12 VDC)
- **-RD** = Reduced Differential (25% reduction typical)
- **-OF** = Oil Free Cleaned[5]
- **-R** = Restrictor (low damping coefficient) Brass
- **-SR** = Spiral Restrictor (high damping coefficient) 300 Series Stainless Steel[6]
- **-WF** = Weather Pack Connector, Female
- **-WM** = Weather Pack Connector, Male
- **-DE** = Deutsch Connector, Male, DT04 Series

**(6) Fixed Set Point (optional)**

A. Specify set point **-FS** (in PSI or BAR, see example)[7]

B. Set Point Actuation
- **R** on Rising Pressure
- **F** on Falling Pressure

Example: **-FS1BARF** for 1 BAR Falling or **-FS20PSIR** for 20 PSI Rising

Notes:
1. Manifold mounts available. Consult factory.
2. 18″ is standard. Specify lead length in inches (max. 48″). e.g. **-FL18** or **-FL30**.
3. 18″ is standard. Specify lead length in inches (max. 48″). e.g. **-EL18** or **-EL30**.
4. DIN connectors require **-C** SPDT circuit.
5. Requires stainless steel pressure fitting.
6. **-SR** will result in wider deadbands and slower response times.
7. Set Point must be within Pressure Range selected in Step 1.

Table 1 — Pressure Range Codes

For Circuit Codes -A, -B and -C

| Pressure Range Code | Pressure Range | Accuracy* | Average Deadband** |
|---|---|---|---|
| **10** | 5-25 psi (0.35-1.7 bar) | ±1.0 psi (0.07 bar) +2% of setting | 3 psi (0.21 bar) +5% of setting |
| **20** | 15-75 psi (1.0-5.2 bar) | ±2.5 psi (0.17 bar) +2% of setting | 5 psig (0.34 bar) +10% of setting |
| **30** | 50-150 psi (3.5-10.3 bar) | ±6 psi (0.41 bar) +2% of setting | 15 psig (1.03 bar) +13% of setting |
| **40** | 150-650 psi (10.3-44.8 bar) | ±15 psi (1.03 bar) +2% of setting | 25 psi (1.72 bar) +14% of setting |
| **50** | 500-1750 psi (34.5-121 bar) | ±25 psi (1.72 bar) +2% of setting | 55 psi (3.79 bar) +15% of setting |
| **60** | 1000-3500 psi (69-241 bar) | ±45 psi (3.10 bar) +3% of setting | 100 psi (6.89 bar) +16% of setting |
| **70** | 2500-6000 psi (172-414 bar) | ±80 psi (5.51 bar) +4% of setting | 200 psi (13.8 bar) +17% of setting |

* Accuracy and set point of units may change due to the effects of temperature.
** In certain applications deadband can be tailored and controlled to customer specifications. Consult factory for details.





*Visit www.GemsSensors.com for most current information.*

# HISTORY AND REVISION LEVEL SUMMARY

| DATE OF CHANGE | DESCRIPTION OF CHANGE AND PAGES OR SECTIONS AFFECTED | ECO NO. AND REVISION LEVEL |
|---|---|---|
| 12/12/18 | | ECO # 132603 |

These drawings and specifications are the property of SUEZ Water Technologies&Solutions and shall not be reproduced, copied, or used for manufacture or sale of apparatus without written permission.

| | | | | | | | | | |
|---|---|---|---|---|---|---|---|---|---|
| DRN NA | DATE | APPD | DATE | SUEZ WATER TECHNOLOGIES & SOLUTIONS | A | JM | 12/12/2018 | 132603 | A |
| | | | | | REV | APPR | DATE | ECO # | LEV |
| CHK JM | DATE 12/12/18 | | | Minnetonka, MN 55343 | LATEST CHANGE | | | | |
| | | | | | CLASS | | 1318327 | | REV A |
| APPR JM | DATE 12/12/18 | | | TITLE: SUEZ INSTRIMENT AIR ASSEMBLY | CHG LEVEL A | | SHT 1 OF 2 | | |

P/N 1114351 Rev B

| RevNr. | Revision note | Date | Sign |
|---|---|---|---|

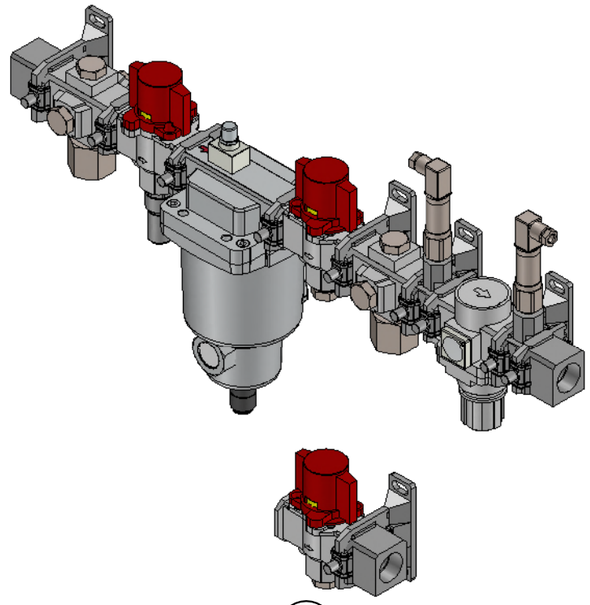

| Item No. | Part Number | Qty | Description |
|---|---|---|---|
| 1 | PS75-30-4MNZ-C-HC-UL-FS70PSIF | 1 | Pressure Switch 70 PSI, UL Listed |
| 2 | PS75-30-4MNZ-C-HC-UL-FS90PSIF | 1 | Pressure Switch 90 PSI, UL Listed |
| 3 | VHS40-N06B-Z | 3 | Shut-off Valve |
| 4 | E500-N06-A | 3 | Piping Adaptor |
| 5 | KV-P37 | 4 | 1/2 NPT PLUG |
| 6 | BFAPP120-ED | 2 | 1/2" MNPT - 3/4" FNPT ADAPTER |
| 7 | Y510-N02-A | 2 | 1/4" FNPT TEE |
| 8 | Y54-N04-A | 2 | Cross Spacer |
| 9 | AR40K-N06E-Z-B | 1 | Regulator |
| 10 | AN40-N04 | 1 | Muffler |
| 11 | AFF11C-N06D-T | 1 | 'Main Air Filter |
| 12 | Y500T-A | 5 | Spacer with Bracket |
| 13 | Y500-A | 5 | Spacer |

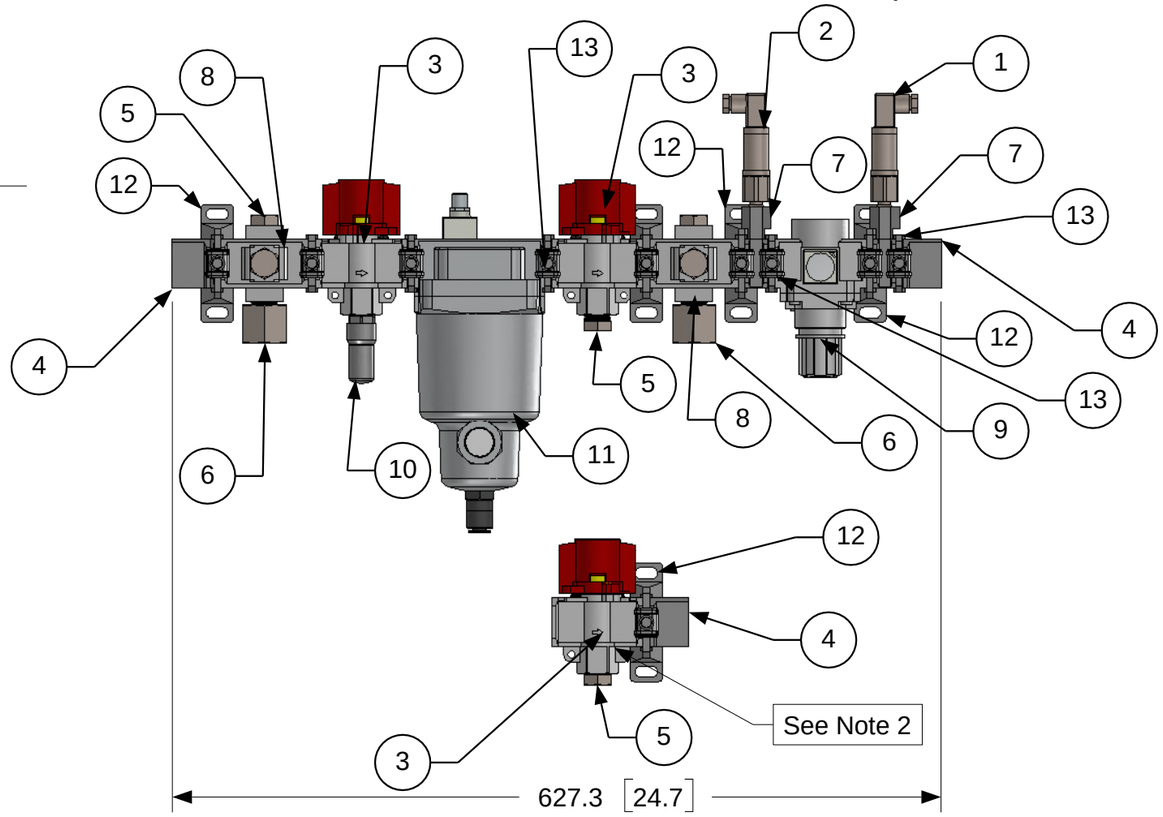


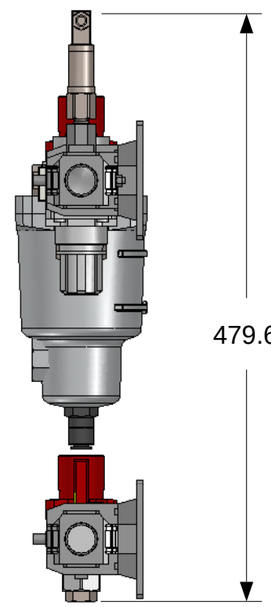


NOTES
1. TUBING NOT PROVIDED WITH SPOOL ASSEMBLIES. TO BE PROVIDED BY CONTRACTOR ONSITE, EITHER SS OR NYLON TYPE 12.
2. SHIPED LOOSE FROM TOP ASSEMBLY

| Rev. No | Description | Signature | Date |
|---|---|---|---|
| 10 | Updated item 1 & 2 to UL Listed | MH | 12/11/2018 |

Signature implies acknowledgement of all drawing dimensions, specifications, materials, surface finish, tolerances and configurations. Items within this document will be manufactured and fabricated as per outlined specifications. Revisions and Engineering Change Requests must be made in writing prior to production start date. Once Production drawings are signed by client, Proax Technologies assumes no responsibility for dimensional and/or specification changes.

Signature

Date

E

A3

Scale

General Tolerances acc to :

ISO 2768-1 medium

**MATERIAL # 3152435**

Drawn MH

Checked

Dat.

PROAX TECHNOLOGIES

Title

**SUEZ MAIN INSTRUMENT AIR ASSEMBLY**

Sheet 1

Rev. 11

Dwg No. 1318327 D1511AM23-11-A1

# Compressed Air Cleaning Filter Series

## For Water, Solid/Oil Separation and Deodorization

## Modular connection, Space-saving design, Labor-saving in piping! (AMG□C, AFF□C, AM□C, AMD□C AMH□C, AME□C, AMF□C)

Uses the same spacer as the F.R.L. combination AC series.
Possible to make a modular connection with products such as AR series regulator.

Note) Spacer with bracket cannot be mounted.
Use the attached bracket.

**Modular connection example**

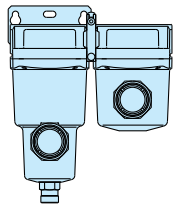

AMH + AME

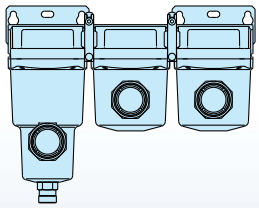

AMH + AME + AMF

∗ The C type is only suitable for modular connection.

## Options added (AMG□C, AFF□C, AM□C, AMD□C AMH□C, AME□C, AMF□C)

### Addition: 5 types

- 1.6 MPa specifications
- Fluororubber specifications
- With differential pressure switch (125 VAC, 30 VDC)
- With differential pressure switch (30 VDC)
- Degreasing wash, white vaseline specifications

## Compact, Lightweight (AME□C, AMF□C)

### Height and mass reduced by up to 40%

**Water Separation**

Water Separator/**AMG**

**Solid/Oil Separation**

Main Line Filter/**AFF**
Mist Separator/**AM**
Micro Mist Separator/**AMD**
Micro Mist Separator with Pre-filter/**AMH**
Super Mist Separator/**AME**

**Deodorization**

Odor Removal Filter/**AMF**

# Series AM□/AFF

SMC

CAT.ES30-11A

## Water droplet removal

### Water Separator

Water droplet separation rate: 99%

AMG150C to 550C AMG650/850

## Large dust particle filtration, Oil droplet separation

### Main Line Filter

Nominal filtration rating: 3 µm
[Filtration efficiency: 99%]

AFF2C to 22C AFF37B/75B AFF75A to 220A

## Dust filtration, Oil mist separation

### Mist Separator

Nominal filtration rating: 0.3 µm
[Filtration efficiency: 99.9%]
Oil mist density at outlet:
Max. 1.0 mg/m$^3$ (ANR)
[≈0.8 ppm]

AM150C to 550C AM650/850

## Dust filtration, Oil mist separation

### Micro Mist Separator

Nominal filtration rating: 0.01 µm
[Filtration efficiency: 99.9%]
Oil mist density at outlet:
Max. 0.1 mg/m$^3$ (ANR)
[≈0.08 ppm]

AMD150C to 550C AMD650 to 1000

| Model | | Flow capacity ℓ/min (ANR) Max. flow capacity at 0.7 MPa inlet pressure | Port size | Note |
|---|---|---|---|---|
| AMG | 150C | 300 | 1/8, 1/4 | Piping support type |
| | 250C | 750 | 1/4, 3/8 | |
| | 350C | 1,500 | 3/8, 1/2 | |
| | 450C | 2,200 | 1/2, 3/4 | |
| | 550C | 3,700 | 3/4, 1 | |
| | 650 | 6,000 | 1, 1 1/2 | |
| | 850 | 12,000 | 1 1/2, 2 | |
| AFF | 2C | 300 | 1/8, 1/4 | Piping support type |
| | 4C | 750 | 1/4, 3/8 | |
| | 8C | 1,500 | 3/8, 1/2 | |
| | 11C | 2,200 | 1/2, 3/4 | |
| | 22C | 3,700 | 3/4, 1 | |
| | 37B | 6,000 | 1, 1 1/2 | |
| | 75B | 12,000 | 1 1/2, 2 | |
| | 75A | | 50(2B) flange | Free standing type |
| | 125A | 22,000 | 80(3B) flange | |
| | 150A | 28,000 | 100(4B) flange | |
| | 220A | 42,000 | | |
| AM | 150C | 300 | 1/8, 1/4 | Piping support type |
| | 250C | 750 | 1/4, 3/8 | |
| | 350C | 1,500 | 3/8, 1/2 | |
| | 450C | 2,200 | 1/2, 3/4 | |
| | 550C | 3,700 | 3/4, 1 | |
| | 650 | 6,000 | 1, 1 1/2 | |
| | 850 | 12,000 | 1 1/2, 2 | |
| AMD | 150C | 200 | 1/8, 1/4 | Piping support type |
| | 250C | 500 | 1/4, 3/8 | |
| | 350C | 1,000 | 3/8, 1/2 | |
| | 450C | 2,000 | 1/2, 3/4 | |
| | 550C | 3,700 | 3/4, 1 | |
| | 650 | 6,000 | 1, 1 1/2 | |
| | 850 | 12,000 | 1 1/2, 2 | |
| | 801 | 8,000 | 50(2B) flange | |
| | 901 | 24,000 | 50(2B), 80(3B), 100(4B) flange | |
| | 800 | 8,000 | 50(2B) flange | Free standing type |
| | 900 | 24,000 | 50(2B), 80(3B), 100(4B) flange | |
| | 1000 | 40,000 | 100(4B), 150(6B) flange | |

## Dust filtration, Oil mist separation

### Micro Mist Separator with Pre-filter

Built-in 0.3 µm pre-filter
The AM + AMD element have been integrated to achieve a space-saving design.
Nominal filtration rating: 0.01 µm
[Filtration efficiency: 99.9%]
Oil mist density at outlet:
Max. 0.1 mg/m$^3$ (ANR)
[≈0.08 ppm]

AMH150C to 550C AMH650/850

## Dust filtration, Oil mist adsorption

### Super Mist Separator

Color change indicates when element is saturated.
Nominal filtration rating: 0.01 µm
[Filtration efficiency: 99.9%]
Oil mist density at outlet:
Max. 0.01 mg/m$^3$ (ANR)
[≈0.008 ppm]
Cleanliness at outlet:
Not more than 35 particles of size 0.3 µm or larger/10 ℓ
(100 particles or less/ft$^3$)

AME150C to 550C AME650/850

## Deodorization

### Odor Removal Filter

Nominal filtration rating: 0.01 µm
[Filtration efficiency: 99.9%]
Oil mist density at outlet:
Max. 0.004 mg/m$^3$ (ANR)
[≈0.0032 ppm]

AMF150C to 550C AMF650 to 1000

| Model | | Flow capacity ℓ/min (ANR) Max. flow capacity at 0.7 MPa inlet pressure | Port size | Note |
|---|---|---|---|---|
| AMH | 150C | 200 | 1/8, 1/4 | Piping support type |
| | 250C | 500 | 1/4, 3/8 | |
| | 350C | 1,000 | 3/8, 1/2 | |
| | 450C | 2,000 | 1/2, 3/4 | |
| | 550C | 3,700 | 3/4, 1 | |
| | 650 | 6,000 | 1, 1 1/2 | |
| | 850 | 12,000 | 1 1/2, 2 | |
| AME | 150C | 200 | 1/8, 1/4 | Piping support type |
| | 250C | 500 | 1/4, 3/8 | |
| | 350C | 1,000 | 3/8, 1/2 | |
| | 450C | 2,000 | 1/2, 3/4 | |
| | 550C | 3,700 | 3/4, 1 | |
| | 650 | 6,000 | 1, 1 1/2 | |
| | 850 | 12,000 | 1 1/2, 2 | |
| AMF | 150C | 200 | 1/8, 1/4 | Piping support type |
| | 250C | 500 | 1/4, 3/8 | |
| | 350C | 1,000 | 3/8, 1/2 | |
| | 450C | 2,000 | 1/2, 3/4 | |
| | 550C | 3,700 | 3/4, 1 | |
| | 650 | 6,000 | 1, 1 1/2 | |
| | 850 | 12,000 | 1 1/2, 2 | |
| | 801 | 8,000 | 50(2B) flange | |
| | 901 | 24,000 | 50(2B), 80(3B) 100(4B) flange | |
| | 800 | 8,000 | 50(2B) flange | |
| | 900 | 24,000 | 50(2B), 80(3B) 100(4B) flange | Free standing type |
| | 1000 | 40,000 | 100(4B), 150(6B) flange | |

# Compressed Air Cleaning Filter Series

## Series AM□/AFF

| | | Series | Water removal rate | Nominal filtration rating | Oil mist density at outlet | Smell | Page |
|---|---|---|---|---|---|---|---|
| Water Separator | **Water Separator** Eliminates water droplets in the compressed air. | Series AMG | 99% | — | — | — | P.2 |
| Solid/Oil Separator | **Main Line Filter** Eliminates impurities such as oil and foreign matter, etc. in compressed air. | Series AFF | — | 3 μm (Filtration efficiency: 99%) | — | — | P.10 |
| | **Mist Separator** Eliminates oil mist in compressed air or rust sized 0.3 μm or more, and foreign matter such as carbon. | Series AM | | 0.3 μm (Filtration efficiency: 99.9%) | 1 mg/m³ (ANR) (≈0.8 ppm) (after oil saturation) | | P.18 |
| | **Micro Mist Separator** Eliminates foreign matter sized 0.01 μm or more, or oil particles in an aerosol state. | Series AMD | | 0.01 μm (Filtration efficiency: 99.9%) | 0.1 mg/m³ (ANR) (≈0.08 ppm) (after oil saturation) | | P.26 |
| | **Micro Mist Separator with Pre-filter** Oil separator, which incorporates pre-filter (equivalent to the AM series) into micro mist separator. | Series AMH | | 0.3 + 0.01 μm (Filtration efficiency: 99.9%) | | | P.36 |
| | **Super Mist Separator** Captures foreign matter sized 0.01 μm or more and adsorbs oil particles in an aerosol state. | Series AME | | 0.01 μm (Filtration efficiency: 99.9%) | 0.01 mg/m³ (ANR) (≈0.008 ppm) | Reduces oil smell. | P.44 |
| Deodorizer | **Odor Removal Filter** Eliminates odor from compressed air. | Series AMF | | | 0.004 mg/m³ (ANR) (≈0.0032 ppm) | Deodorizes oil smell. | P.52 |


**Modular Connection Examples** P.61

**How to Order Bowl Assembly** P.63


**Options**

- **Seal material: Fluororubber**
- **For medium air pressure**
- **With differential pressure switch (with indicator) (125 VAC, 30 VDC)**
- **IN-OUT reversal direction**
- **Drain guide 1/4 female threaded**
- **With differential pressure switch (with indicator) (30 VDC)**
- **Degreasing wash, white vaseline**
- **With element service indicator**

Refer to "How to Order" of respective models.

**Made to Order**

- **With differential pressure gauge**
  Possible to control product's service life by monitoring the clogged element.
- **Auto drain type, drain guide specifications**
  Drain piping is possible by auto drain type.
- **With IN-OUT flange**
  Flange piping connection is possible.
- **White vaseline specifications***
  Using white vaseline for lubricant.
- **With differential pressure gauge, IN-OUT flange**
  Flange piping connection and clogged element confirmation are possible.
- **With differential pressure switch (with indicator)***
  Allows visual confirmation of differential pressure which indicates the element life. The built-in contact enables remote control.

P.67

* Applicable only to the AFF37B, 75B, AM□650 and 850.

**Special Specifications**

**Clean Series**
Usable inside a clean room.

**Copper-free, Fluorine-free**
Eliminates the effects on a color CRT by copper ion or fluoric resin, etc.

P.67

**Related Products** Auto Drain Valve, Motor Operated Auto Drain, Heavy Duty Auto Drain, Differential Pressure Gauge P.73

**Specific Product Precautions** Back page 3

**Discontinued Model and Equivalent Model** Back page 7

# Main Line Filter
# *Series AFF*

**Can remove impurities such as oil, water and foreign matter in compressed air and can improve the function of a dryer in the downstream, extend the life of precision filter, and prevent trouble with the equipment.**

**Modular connection is possible with AFF2C to 22C.**
**(For details, refer to page 61.)**

**AFF2C to 22C**

**AFF37B/75B**

**AFF75A to 220A**

**JIS Symbol**

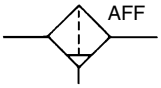


Made to Order

**Made to Order**
**(For details, refer to page 67.)**

## ⚠ Caution

**Be sure to read this before handling.**
**Refer to back pages 1 and 2 for Safety Instructions, "Precautions for Handling Pneumatic Devices" (M-03-E3A) for Common Precautions, and back pages 3 through to 7 for Specific Product Precautions.**

## Model

| Model | AFF2C | AFF4C | AFF8C | AFF11C | AFF22C | AFF37B | AFF75B | AFF75A | AFF125A | AFF150A | AFF220A |
|---|---|---|---|---|---|---|---|---|---|---|---|
| Rated flow Note) (ℓ/min (ANR)) | 300 | 750 | 1500 | 2200 | 3700 | 6000 | 12000 | 12000 | 22000 | 28000 | 42000 |
| Port size | 1/8, 1/4 | 1/4, 3/8 | 3/8, 1/2 | 1/2, 3/4 | 3/4, 1 | 1, 1 1/2 | 1 1/2, 2 | 50(2B) | 80(3B) | 100(4B) | 100(4B) |
| | | | | | | | | JIS 10K FF flange | | | |
| Mass (kg) | 0.38 | 0.55 | 0.9 | 1.4 | 2.1 | 4.2 | 10.5 | 50 | 52 | 72 | 87 |

Note) Max. flow at 0.7 MPa.
Max. flow varies depending on the operating pressure.
Refer to "Flow Characteristics" (page 13) and "Maximum Air Flow" below.

## Specifications

| | |
|---|---|
| **Fluid** | Compressed air |
| **Max. operating pressure** | 1.0 MPa |
| **Min. operating pressure*** | 0.05 MPa |
| **Proof pressure** | 1.5 MPa |
| **Ambient and fluid temperature** | 5 to 60°C |
| **Nominal filtration rating** | 3 μm (Filtration efficiency: 99%) |
| **Element life** | 2 years (1 year for A type) or when pressure drop reached 0.1 MPa |

* With auto drain: 0.1 MPa (N.O. type) or 0.15 MPa (N.C. type)

## Accessory/For AFF2C to 22C, AFF37B/75B

| Applicable model | AFF2C | AFF4C | AFF8C | AFF11C | AFF22C | AFF37B | AFF75B |
|---|---|---|---|---|---|---|---|
| Bracket assembly (with 2 mounting screws) | AM-BM101 | AM-BM102 | AM-BM103 | AM-BM104 | AM-BM105 | BM56 | BM57 |

## Accessory/For AFF75A to 220A

| Applicable model | AFF75A | AFF125A | AFF150A | AFF220A |
|---|---|---|---|---|
| Auto drain (2 pcs. each) | AD402-03-2 | | | |
| Pressure gauge (2 pcs. each) | G46-15-02 | | | |
| Companion flange (2 pcs. each) | 50(2B)JIS 10K FF flange | 80(3B)JIS 10K FF flange | 100(4B)JIS 10K FF flange | |
| Anchor bolt (3 pcs. each) | AI-2S | | | |

## Model Selection

Select a model in accordance with the following procedure taking the inlet pressure and the max. air flow rate into consideration.
(Example) Inlet pressure: 0.6 MPa
Max. air flow rate: 5 m³/min (ANR)

1. Obtain the intersecting point A of inlet pressure and max. air flow rate in the graph.
2. The AFF37B is obtained when the max. flow line is above the intersecting point A in the graph.

Note) Make sure to select a model that has the max. flow line above the obtained intersecting point. With a model that has the max. flow line below the obtained intersecting point, the flow rate will be exceeded, thus leading to a problem such as being unable to satisfy the specifications.

## Maximum Air Flow

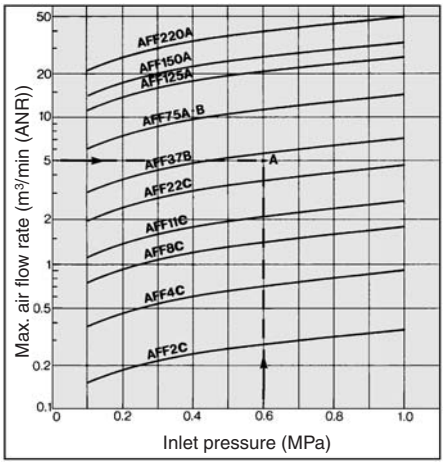

## How to Order

### AFF2C to 22C

**AFF 22C – [ ] 10 [ ] [ ] – [ ] – [ ]**

**Body size**

| Symbol | Applicable compressor output (guide) |
|---|---|
| 2C | 2.2 kW |
| 4C | 3.7 kW |
| 8C | 7.5 kW |
| 11C | 11 kW |
| 22C | 22 kW |

**Thread type**

| Symbol | Type |
|---|---|
| Nil | Rc |
| F | G*1 |
| N | NPT |

*1 Conforms to ISO1179-1.

**Port size**

| Symbol | Size | Applicable body size | | | | |
|---|---|---|---|---|---|---|
| | | 2C | 4C | 8C | 11C | 22C |
| 01 | 1/8 | ● | | | | |
| 02 | 1/4 | ● | ● | | | |
| 03 | 3/8 | | ● | ● | | |
| 04 | 1/2 | | | ● | ● | |
| 06 | 3/4 | | | | ● | ● |
| 10 | 1 | | | | | ● |

**Accessory**

| Symbol | Description |
|---|---|
| Nil | — |
| B | Bracket *2 |

*2 Bracket is included, (but not assembled).

**Made to Order**

("How to Order" and the applicable models are different from those shown on this page. Be sure to refer to "Made to Order".)

| Symbol | Description | Page for details |
|---|---|---|
| Nil | — | — |
| X6 | With differential pressure gauge (GD40-2-01) | P.68 |
| X15 | With IN-OUT flange | P.69 |
| X17 | With differential pressure gauge (GD40-2-01) and IN-OUT flange | P.69 |
| X26 | N.C., N.O. auto drain, drain piping type | P.70 |

**Option** *3

| Symbol | Description |
|---|---|
| Nil | — |
| F | Rubber material: Fluororubber |
| H | For medium air pressure (1.6 MPa) |
| J | Drain guide 1/4 female threaded *4 |
| R | IN-OUT reversal direction |
| S | With differential pressure switch (125 VAC, 30 VDC) *5, Note) |
| U | With differential pressure switch (30 V) *5, Note) |
| T | With element service indicator |
| V | Degreasing wash,*6 white vaseline |

*4 Drain piping and piping for a stop valve such as ball valve are required.
*5 Differential pressure gauge is included, (but not assembled).
*6 Only body/housing is degreasing washed.
Note) Order "U" if conformity to the EU directive is required.

**Auto drain** *3

| Symbol | Description |
|---|---|
| Nil | Drain cock (Without auto-drain) |
| C | N.C. auto drain |
| D | N.O. auto drain |

*3 Refer to "Auto Drain Specifications/Option Combinations".

### Auto Drain Specifications/Option Combinations

◎: Available ■: Not available
○, △: Plural options cannot be selected.
(i.e. Combinations such as C-FV, D-FHV, J-ST are not possible.)

| Symbol | F | H | R | S | U | T | V |
|---|---|---|---|---|---|---|---|
| Auto drain specifications Nil | ◎ | ◎ | ◎ | ○ | ○ | ○ | ◎ |
| C | △ | ■ | ◎ | ○ | ○ | ○ | △ |
| D | △ | △ | ◎ | ○ | ○ | ○ | △ |
| J | ◎ | ◎ | ◎ | ○ | ○ | ○ | ◎ |

## Options

### Symbol F: Rubber material: Fluororubber

Fluororubber is used for the parts such as O-ring and gasket.

### Symbol H: For medium air pressure (1.6 MPa)

Can be used up to 1.6 MPa at maximum.

### Symbol J: Drain guide 1/4 female threaded

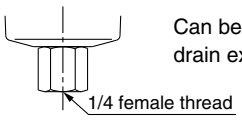


Can be pipied to the drain exhaust port.

### Symbol R: IN-OUT reversal direction

Air flow in the separator is changed to right to left.
(Air flow direction of the standard: Left to right.)

### Symbol T: With element service indicator

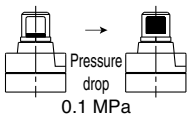


Saturation of the separator can be observed visually. (Element life check)

### Symbol V: Degreasing wash, white vaseline

Body/housing is degreasing washed. The lubrication grease for O-ring and gasket is changed to white vaseline.

### Symbol S: With differential pressure switch (with indicator)

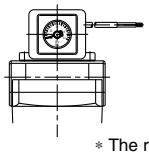

Saturation of the separator can be observed visually or by an electrical signal. (Element life check)

* The rated contact voltage is different from "U".

Max. contact capacity: 10 VA AC, 10 W DC
Rated contact voltage (max. operating current): 125 V AC (0.08 A), 30 V DC (0.33 A)

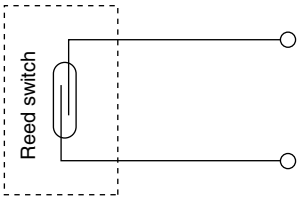


### Symbol U: With differential pressure switch (with indicator)

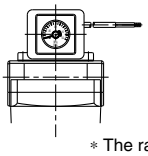

Saturation of the separator can be observed visually or by an electrical signal. (Element life check)

* The rated contact voltage is different from "S".

Max. contact capacity: 10 W DC
Rated contact voltage (max. operating current): 30 V DC (0.33 A)

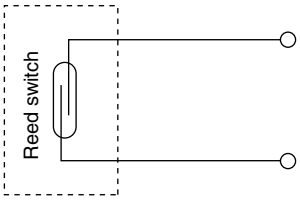

## How to Order

### AFF37B/75B

**AFF 37B – ☐ 10 ☐ ☐ – ☐ – ☐**

**Body size**

| Symbol | Applicable compressor output (guide) |
|---|---|
| **37B** | 37 kW |
| **75B** | 75 kW |

**Thread type**

| Symbol | Type |
|---|---|
| **Nil** | Rc |
| **F** | G |
| **N** | NPT |

**Port size**

| Symbol | Size | Applicable body size | |
|---|---|---|---|
| | | **37B** | **75B** |
| **10** | 1 | ● | — |
| **14** | 1 1/2 | ● | ● |
| **20** | 2 | — | ● |

**Accessory**

| Symbol | Description |
|---|---|
| **Nil** | — |
| **B** | Bracket *1 |

*1 Bracket is included, (but not assembled).

**Auto drain** *2

| Symbol | Description |
|---|---|
| **Nil** | Drain cock (Without auto drain) *3 |
| **D** | N.O. auto drain |

*2 Refer to "Auto Drain Specifications/Option Combinations".
*3 Body size 75B is equipped with a ball valve (Rc3/8 female threaded). Mount a piping adapter IDF-AP609 (page 62) to the ball valve if NPT3/8 female threaded is required.

**Option** *2

| Symbol | Description |
|---|---|
| **Nil** | — |
| **J** | Drain guide 1/4 female threaded *4 |
| **R** | IN-OUT reversal direction |
| **T** | With element service indicator |

*4 Drain piping and piping for a stop valve such as ball valve are required.

**Made to Order**
("How to Order" and the applicable models are different from those shown on this page. Be sure to refer to "Made to Order".)

| Symbol | Description | Page for details |
|---|---|---|
| **Nil** | — | — |
| **X6** | With differential pressure gauge (GD40-2-01) | P.68 |
| **X37** | With differential pressure switch (With indicator, 125 VAC, 30 VDC) | P.68 |
| **X15** | With IN-OUT flange | P.69 |
| **X17** | With differential pressure gauge (GD40-2-01) and IN-OUT flange | P.69 |
| **X26** | N.C., N.O. auto drain, drain piping type | P.70 |
| **X12** | White vaseline specifications | P.70 |

Note) Refer to "How to Order Bowl Assembly" on page 63.

### Auto Drain Specifications/Option Combinations

◎: Available ▒: Not available

| Auto drain specifications/Option | | | Auto drain specifications | Option | | | Applicable model | |
|---|---|---|---|---|---|---|---|---|
| | | | **D** | **J** | **R** | **T** | **AFF37B** | **AFF75B** |
| Auto drain specifications | N.O. auto drain | **D** | ▒ | ▒ | ◎ | ◎ | ◎ | ◎ |
| Option | Drain guide 1/4 | **J** | ▒ | ▒ | ◎ | ◎ | ◎ | ▒ |
| | IN-OUT reversal direction | **R** | ◎ | ◎ | ▒ | ◎ | ◎ | ◎ |
| | With element service indicator | **T** | ◎ | ◎ | ◎ | ▒ | ◎ | ◎ |

### AFF75A to 220A

**AFF 75A – 20 D ☐**

**Standard size (Applicable compressor)**

| Symbol | Compressor output |
|---|---|
| **75A** | 75 kW |
| **125A** | 110 to 125 kW |
| **150A** | 150 kW |
| **220A** | 180 to 220 kW |

**Port size**

| Symbol | Size | Applicable body size | | | |
|---|---|---|---|---|---|
| | | **75A** | **125A** | **150A** | **220A** |
| **20** | 50(2B) JIS 10K FF flange | ● | — | — | — |
| **30** | 80(3B) JIS 10K FF flange | — | ● | — | — |
| **40** | 100(4B) JIS 10K FF flange | — | — | ● | ● |

**Accessory**

| Symbol | Description |
|---|---|
| **Nil** | — |
| **D** | Auto drain |
| **G** | Pressure gauge |
| **F** | Companion flange |
| **L** | Anchor bolt |

**Made to Order**
("How to Order" and the applicable models are different from those shown on this page. Be sure to refer to "Made to Order".)

| Symbol | Description | Page for details |
|---|---|---|
| **Nil** | — | — |
| **X13** | Mist separator for high flow rate (Nominal filtration rating: 0.3 μm) | P.71 |

## Flow Characteristics/Select the model taking the max. flow capacity into consideration. (Element oil saturation)

Note) Compressed air over max. flow line in the table below may not meet the specifications of the product.
It may cause damage to the element.

### AFF2C

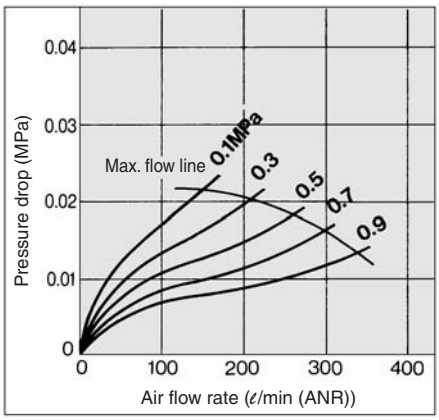


### AFF22C

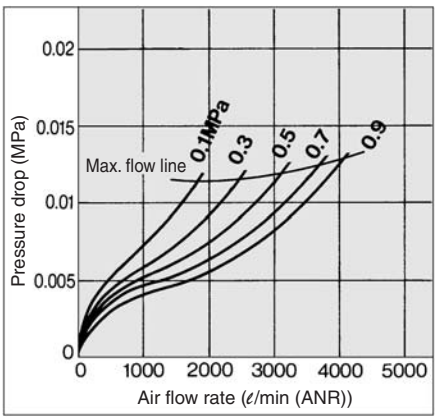


### AFF75A

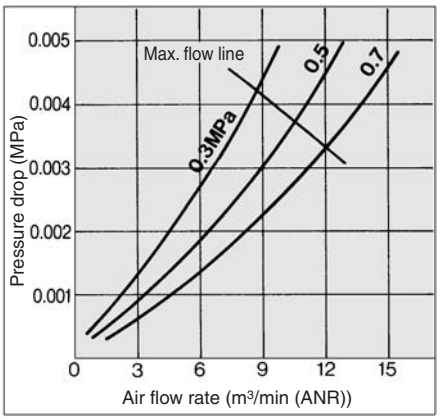


### AFF4C

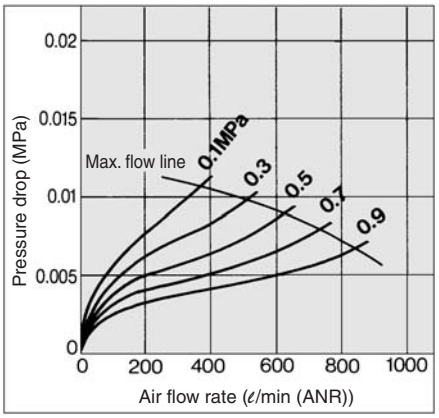


### AFF37B

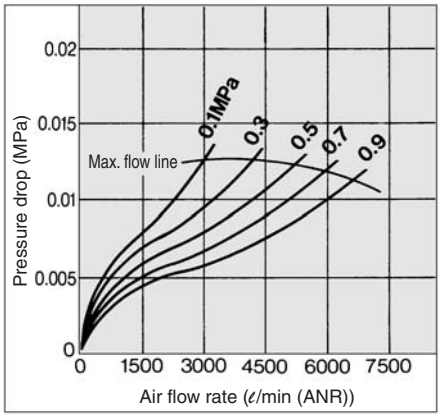


### AFF125A

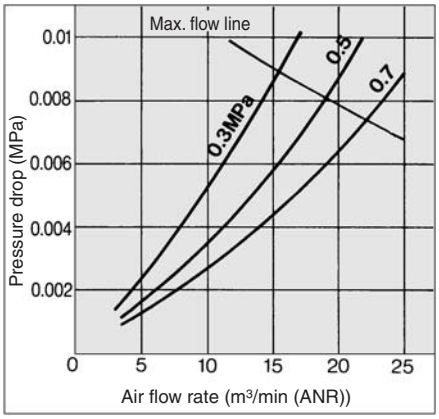


### AFF8C

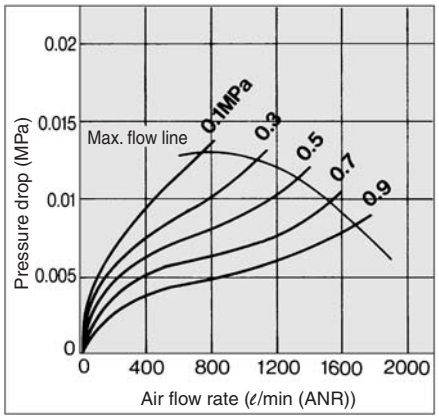


### AFF75B

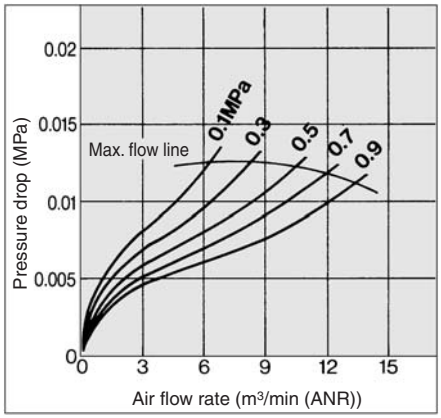


### AFF150A

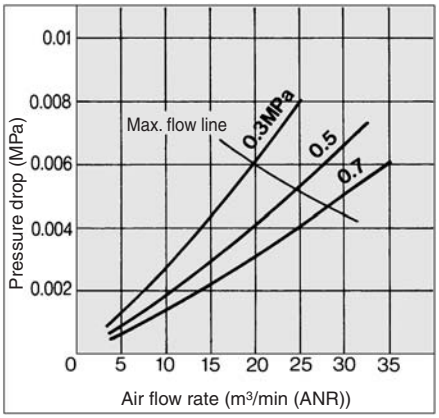


### AFF11C

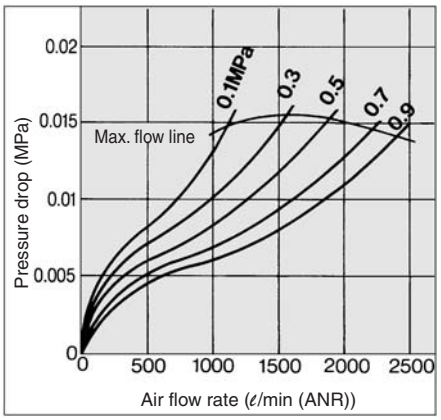


### AFF220A

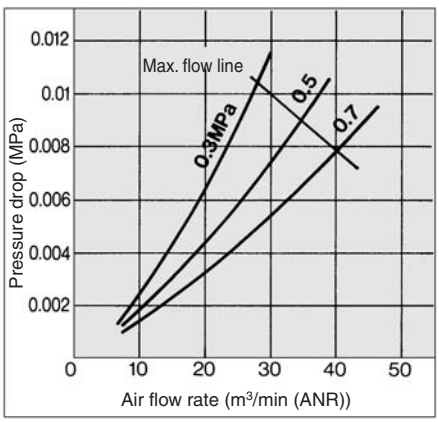

## Construction

### AFF2C to 22C, AFF37B

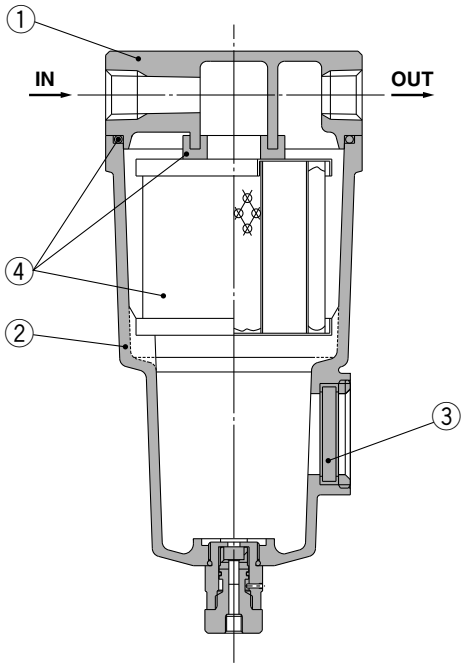


### AFF75B

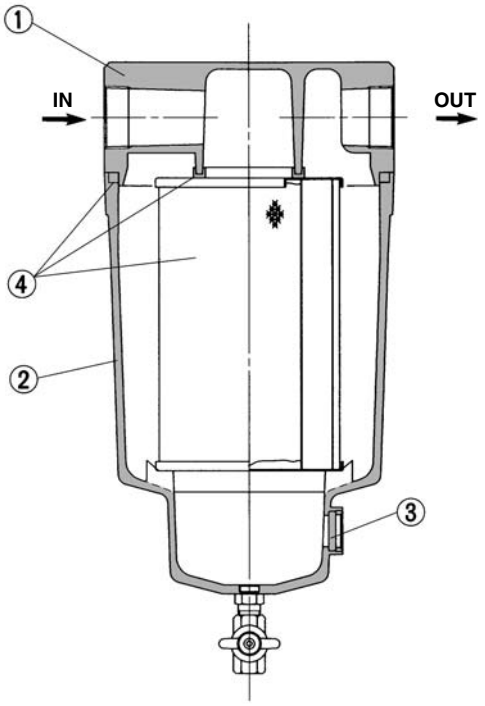


### Component Parts

| No. | Description | Material | Note |
|---|---|---|---|
| 1 | **Body** | Aluminum die-casted | Chrome treated |
| 2 | **Housing** | Aluminum die-casted* | Epoxy coating on inner surface |
| 3 | **Sight glass** | Tempered glass | — |

∗ The AFF75B is aluminum casted.

Note) Refer to "How to Order Bowl Assembly" on page 63.

Note) Sight glass is indicated in the figure for easy understanding of component parts. However, it differs from the actual construction. Please refer to pages 15 through to 17 for details.

### Replacement Parts

| No. | Description | Material | Applicable model | Model | | | | | | |
|---|---|---|---|---|---|---|---|---|---|---|
| | | | | **AFF2C** | **AFF4C** | **AFF8C** | **AFF11C** | **AFF22C** | **AFF37B** | **AFF75B** |
| 4 | **Element assembly** | Cotton paper, others | Except option F | AFF-EL2B | AFF-EL4B | AFF-EL8B | AFF-EL11B | AFF-EL22B | AFF-EL37B | AFF-EL75B |
| | | | For option F | AFF-EL2B-F | AFF-EL4B-F | AFF-EL8B-F | AFF-EL11B-F | AFF-EL22B-F | — | — |

∗ Element assembly: With gasket (1 pc.) and O-ring (1 pc.)
∗ Refer to back page 6 for replacement of auto drain.
∗ Element assemblies for Made to Order (X6, X12, X15, X17, X20, X26, X37) are same as those for standard (see the above table).

### AFF75A to 220A

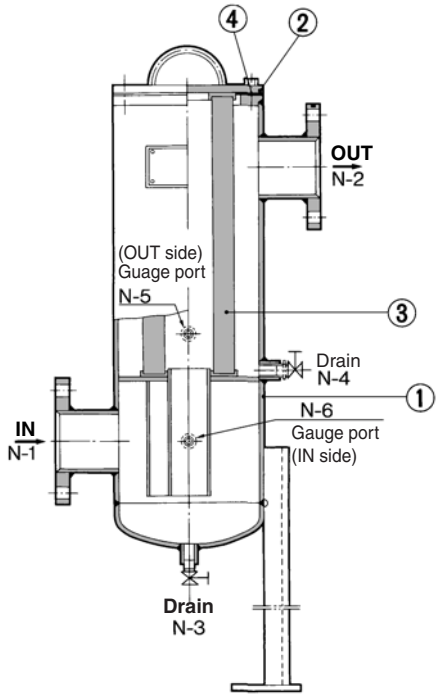


### Component Parts

| No. | Description | Material | Note |
|---|---|---|---|
| 1 | **Case** | SGP-E, SS400 | |
| 2 | **Cover** | SS400 | |

### Replacement Parts

| No. | Description | Material | Qty. | Model | | | |
|---|---|---|---|---|---|---|---|
| | | | | **AFF75A** | **AFF125A** | **AFF150A** | **AFF220A** |
| 3 | **Element** | — | 1 | EC700-003N | | EC800-003N | EC900-003N |
| 4 | **Seal** | NBR | 1 | AL-33S | | AL-34S | AL-35S |

## Dimensions

### AFF2C to 22C

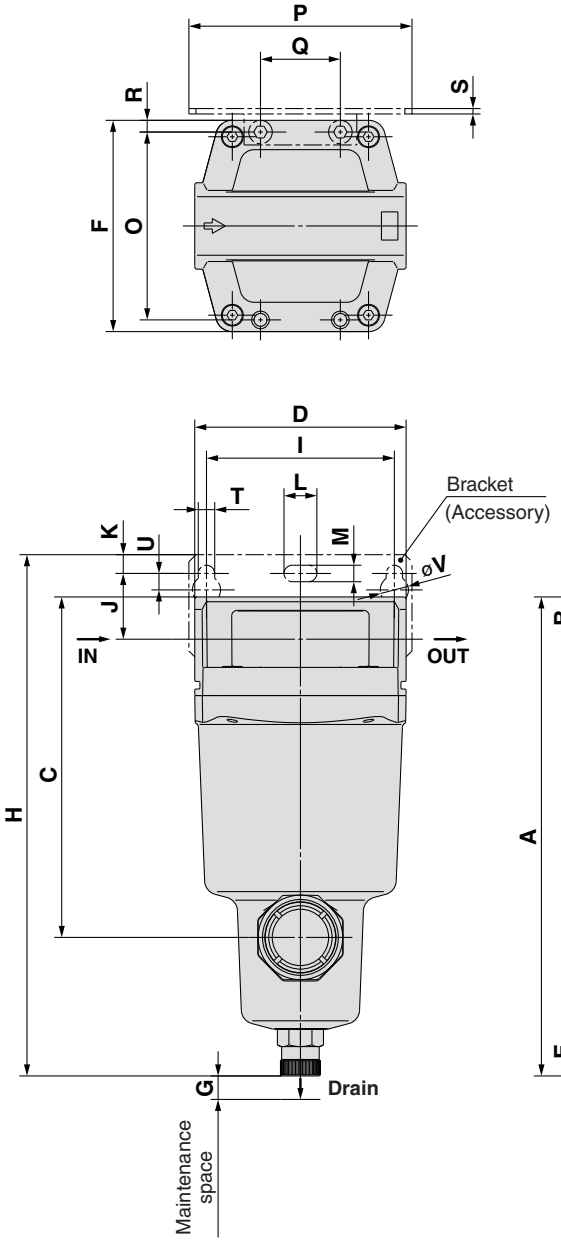


### Auto drain

**C: With auto drain (N.C.)**
**D: With auto drain (N.O.)**

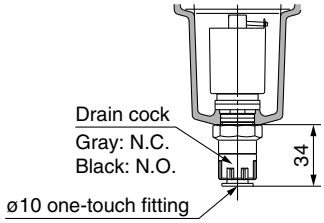


**Combination of D: With auto drain (N.O.) and H: For medium air pressure**

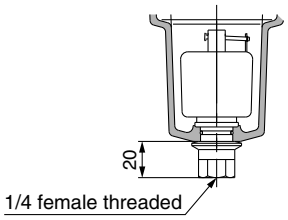


### Option

**J: Drain guide 1/4 female threaded**

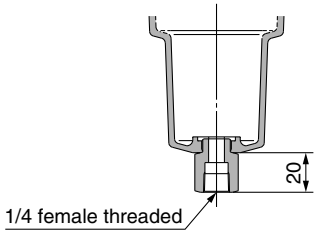


**S, U: With differential pressure switch (with indicator)**

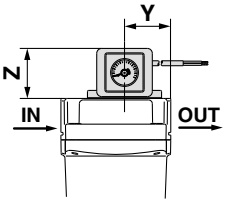


**T: With element service indicator**

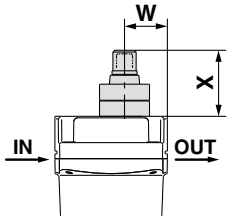


(mm)

| Model | Port size | A | B | C | D | E | F | G | Bracket related dimensions | | | | | | | | | | | | | | | Element service indicator related dimensions | | Differential pressure switch related dimensions | |
|---|---|---|---|---|---|---|---|---|---|---|---|---|---|---|---|---|---|---|---|---|---|---|---|---|---|---|---|
| | | | | | | | | | H | I | J | K | T | U | L | M | V | N | O | P | Q | R | S | W | X | Y | Z |
| **AFF2C** | 1/8, 1/4 | 158 | 10 | 99 | 63 | 20 | 63 | 10 | 173 | 56 | 20 | 5 | 6 | 6 | 12 | 6 | 10 | 35 | 54 | 70 | 26 | 4.5 | 1.6 | 24 | 37 | 32 | 41 |
| **AFF4C** | 1/4, 3/8 | 172 | 14 | 113 | 76 | 20 | 76 | 10 | 190 | 66 | 24 | 8 | 6 | 6 | 12 | 6 | 10 | 40 | 66 | 80 | 28 | 5 | 2 | 27 | 37 | 36 | 41 |
| **AFF8C** | 3/8, 1/2 | 204 | 18 | 145 | 90 | 20 | 90 | 10 | 222 | 80 | 28 | 8 | 7 | 7 | 14 | 7 | 12 | 50 | 80 | 95 | 34 | 5 | 2.3 | 32 | 37 | 42 | 41 |
| **AFF11C** | 1/2, 3/4 | 225 | 20 | 166 | 106 | 20 | 106 | 10 | 246 | 90 | 31 | 10 | 9 | 9 | 18 | 9 | 15 | 55 | 88 | 111 | 50 | 9 | 3.2 | 37 | 37 | 43 | 41 |
| **AFF22C** | 3/4, 1 | 259 | 24 | 200 | 122 | 20 | 122 | 15 | 278 | 100 | 33 | 10 | 9 | 9 | 18 | 9 | 15 | 65 | 102 | 126 | 60 | 10 | 3.2 | 39 | 37 | 51 | 41 |

## Dimensions

### AFF37B

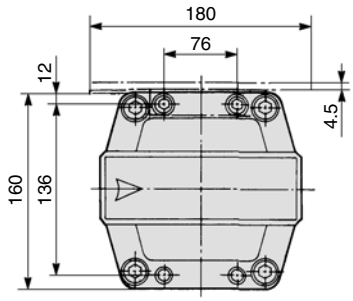


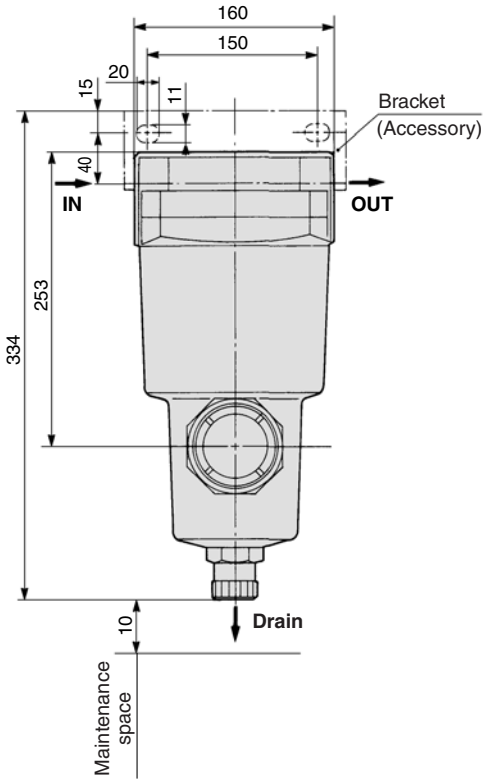


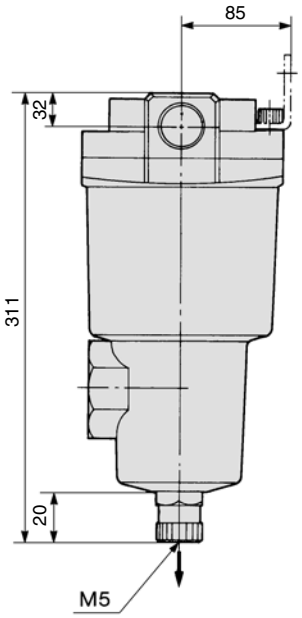


**Auto drain**

**D: With auto drain (N.O.)**

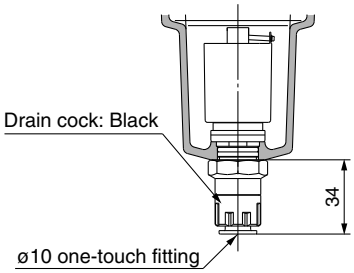


**Option**

**J: Drain guide 1/4 female threaded**

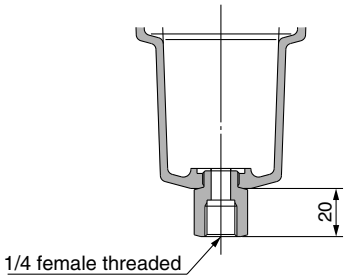


**T: With element service indicator**

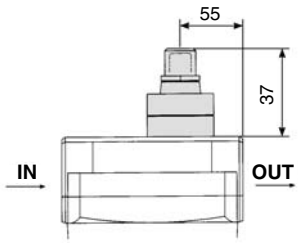

## Dimensions

### AFF75B

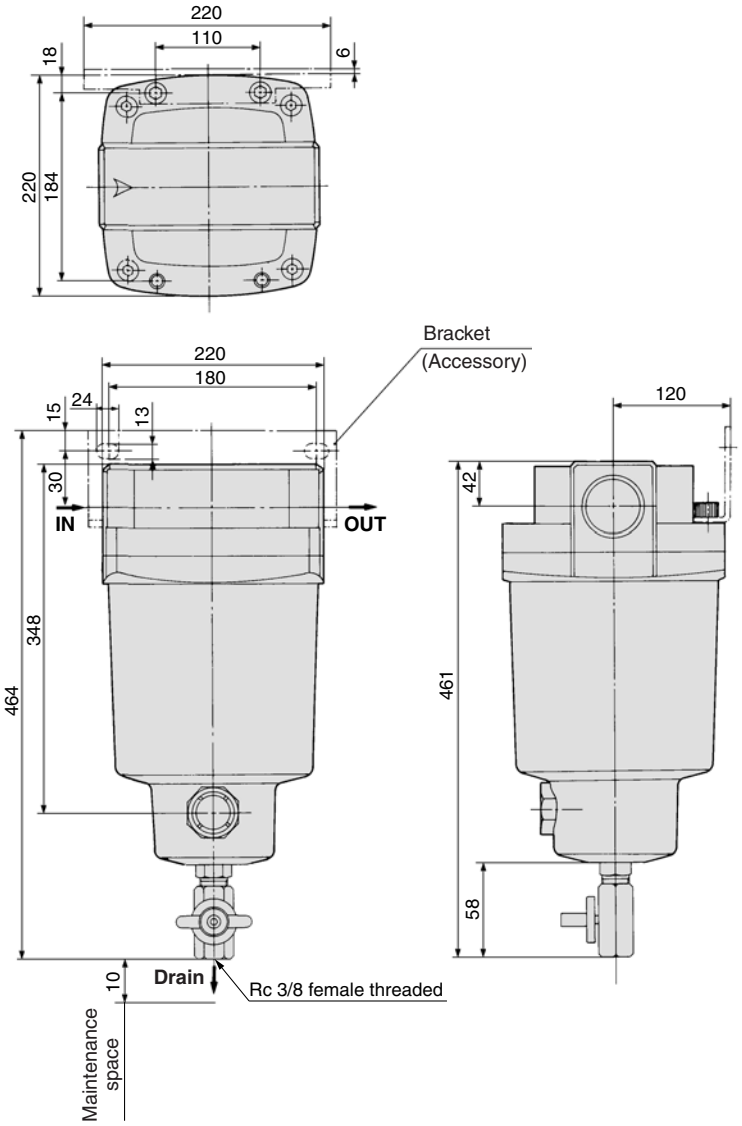


**Auto drain**

**D: With auto drain (N.O.) for AFF75B**

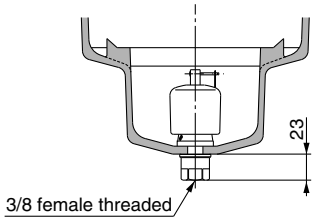


**Option**

**T: With element service indicator**

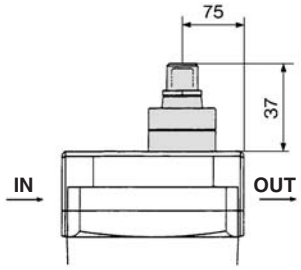


### AFF75A to 220A

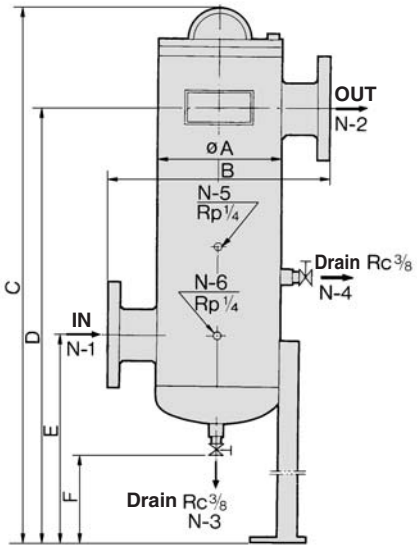


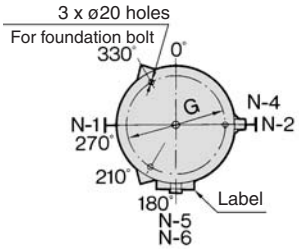


**ORIENTATION**

(mm)

| Model | Port size | øA | B | C | D | E | F | G |
|---|---|---|---|---|---|---|---|---|
| **AFF75A** | 50(2B)JIS10K FF flange | 200 (8B) | 380 | 1125 | 935 | 505 | 265 | 184 |
| **AFF125A** | 80(3B)JIS10K FF flange | 200 (8B) | 380 | 1125 | 935 | 505 | 265 | 184 |
| **AFF150A** | 100(4B)JIS10K FF flange | 250 (10B) | 450 | 1178 | 980 | 540 | 265 | 236 |
| **AFF220A** | 100(4B)JIS10K FF flange | 300 (12B) | 500 | 1291 | 1070 | 670 | 325 | 282 |

# Micro Mist Separator
# *Series AMD*

**Can separate and remove aerosol state oil mist in compressed air and remove particles such as carbon or dust of more than 0.01 μm.**
**Use this product as a pre-filter for compressed air for precision instruments or clean room requiring higher clean air.**

**Modular connection is possible with AMD150C to 550C.**
**(For details, refer to page 61.)**

**AMD150C to 550C** **AMD650/850**

**Symbol**

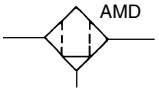


Made to Order

**Made to Order**
**(For details, refer to page 67.)**

## Model

| Model | AMD150C | AMD250C | AMD350C | AMD450C | AMD550C | AMD650 | AMD850 |
|---|---|---|---|---|---|---|---|
| Rated flow (ℓ/min (ANR)) Note) | 200 | 500 | 1000 | 2000 | 3700 | 6000 | 12000 |
| Port size | 1/8, 1/4 | 1/4, 3/8 | 3/8, 1/2 | 1/2, 3/4 | 3/4, 1 | 1, 1 1/2 | 1 1/2, 2 |
| Mass (kg) | 0.38 | 0.55 | 0.9 | 1.4 | 2.1 | 4.2 | 10.5 |

Note) Max. flow at 0.7 MPa.
Max. flow varies depending on the operating pressure.
Refer to "Flow Characteristics" (page 29) and "Maximum Air Flow" (page 28).

## Model/Free Standing Type

| Model | AMD800 | AMD900 | AMD1000 |
|---|---|---|---|
| Rated flow (ℓ/min (ANR)) | 8000 | 24000 | 40000 |
| Port size | 50(2B)JIS 10K FF flange | 50(2B), 80(3B), 100(4B)JIS 10K FF flange | 100(4B), 150(6B)JIS 10K FF flange |
| Mass (kg) | 100 | 220 | 430 |

## Model/Piping Support Type

| Model | AMD801 | AMD901 |
|---|---|---|
| Rated flow (ℓ/min (ANR)) | 8000 | 24000 |
| Port size | 50(2B)JIS 10K FF flange | 50(2B), 80(3B), 100(4B)JIS 10K FF flange |
| Mass (kg) | 50 | 140 |

## Specifications

| | |
|---|---|
| **Fluid** | Compressed air |
| **Max. operating pressure** | 1.0 MPa |
| **Min. operating pressure*** | 0.05 MPa |
| **Proof pressure** | 1.5 MPa |
| **Ambient and fluid temperature** | 5 to 60°C |
| **Nominal filtration rating** | 0.01 μm (Filtration efficiency: 99.9%) |
| **Oil mist density at outlet** | Max. 0.1 mg/m³ (ANR)*<br>(Before saturated with oil, less than 0.01 mg/m³ (ANR) ≈0.008 ppm) |
| **Element life** | 2 years (1 year for flange type)<br>or when pressure drop reached 0.1 MPa |

* With auto drain: 0.1 MPa (N.O. type) or 0.15 MPa (N.C. type)
* Oil mist density at 30 mg/m³ (ANR) blown out by compressor.

## Accessory

| Applicable model | AMD150C | AMD250C | AMD350C | AMD450C | AMD550C | AMD650 | AMD850 |
|---|---|---|---|---|---|---|---|
| Bracket assembly (with 2 mounting screws) | AM-BM101 | AM-BM102 | AM-BM103 | AM-BM104 | AM-BM105 | BM56 | BM57 |

## ⚠ Caution

**Be sure to read this before handling.**
**Refer to back pages 1 and 2 for Safety Instructions, "Precautions for Handling Pneumatic Devices" (M-03-E3A) for Common Precautions, and back pages 3 through to 7 for Specific Product Precautions.**

## How to Order

### AMD150C to 550C

**AMD 550C – [ ] 10 [ ] [ ] – [ ] – [ ]**

**Body size**

| |
|---|
| 150C |
| 250C |
| 350C |
| 450C |
| 550C |

**Thread type**

| Symbol | Type |
|---|---|
| Nil | Rc |
| F | G*1 |
| N | NPT |

*1 Conforms to ISO1179-1.

**Port size**

| Symbol | Size | Applicable body size | | | | |
|---|---|---|---|---|---|---|
| | | 150C | 250C | 350C | 450C | 550C |
| 01 | 1/8 | ● | | | | |
| 02 | 1/4 | ● | ● | | | |
| 03 | 3/8 | | ● | ● | | |
| 04 | 1/2 | | | ● | ● | |
| 06 | 3/4 | | | | ● | ● |
| 10 | 1 | | | | | ● |

**Accessory**

| Symbol | Description |
|---|---|
| Nil | — |
| B | Bracket *2 |

*2 Bracket is included, (but not assembled).

**Made to Order**

("How to Order" and the applicable models are different from those shown on this page. Be sure to refer to "Made to Order".)

| Symbol | Description | Page for details |
|---|---|---|
| Nil | — | — |
| X6 | With differential pressure gauge (GD40-2-01) | P.68 |
| X15 | With IN-OUT flange | P.69 |
| X17 | With differential pressure gauge (GD40-2-01) and IN-OUT flange | P.69 |
| X26 | N.C., N.O. auto drain, drain piping type | P.70 |

**Option** *3

| Symbol | Description |
|---|---|
| Nil | — |
| F | Rubber material: Fluororubber |
| H | For medium air pressure (1.6 MPa) |
| J | Drain guide 1/4 female thread *4 |
| R | IN-OUT reversal direction |
| S | With differential pressure switch (125 VAC, 30 VDC) *5, Note) |
| U | With differential pressure switch (30 VDC) *5, Note) |
| T | With element service indicator |
| V | Degreasing wash,*6 white vaseline |

*4 Drain piping and piping for a stop valve such as ball valve are required.
*5 Differential pressure gauge is included, (but not assembled).
*6 Only body/housing is degreasing washed.
Note) Order "U" if conformity to the EU directive is required.

**Auto drain** *3

| Symbol | Description |
|---|---|
| Nil | Drain cock (Without auto drain) |
| C | N.C. auto drain |
| D | N.O. auto drain |

*3 Refer to "Auto Drain Specifications/Option Combinations".

### Auto Drain Specifications/Option Combinations

◎: Available ■: Not available
○, △: Plural options cannot be selected.
(i.e. Combinations such as C-FV, D-FHV, J-ST are not possible.)

| Symbol | F | H | R | S | U | T | V |
|---|---|---|---|---|---|---|---|
| Auto drain specifications Nil | ◎ | ◎ | ◎ | ○ | ○ | ○ | ◎ |
| C | △ | ■ | ◎ | ○ | ○ | ○ | △ |
| D | △ | △ | ◎ | ○ | ○ | ○ | △ |
| J | ◎ | ◎ | ◎ | ○ | ○ | ○ | ◎ |

## Options

### Symbol F: Rubber material: Fluororubber

Fluororubber is used for the parts such as O-ring and gasket.

### Symbol H: For medium air pressure (1.6 MPa)

Can be used up to 1.6 MPa at maximum.

### Symbol J: Drain guide 1/4 female threaded

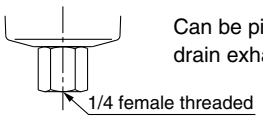


Can be pipied to the drain exhaust port.

### Symbol R: IN-OUT reversal direction

Air flow in the separator is changed to right to left.
(Air flow direction of the standard: Left to right.)

### Symbol T: With element service indicator

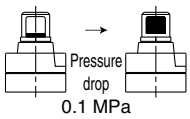


Saturation of the separator can be observed visually. (Element life check)

### Symbol V: Degreasing wash, white vaseline

Body/housing is degreasing washed. The lubrication grease for O-ring and gasket is changed to white vaseline.

### Symbol S: With differential pressure switch (with indicator)

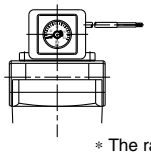

Saturation of the separator can be observed visually or by an electrical signal. (Element life check)

* The rated contact voltage is different from "U".

Max. contact capacity: 10 VA AC, 10 W DC
Rated contact voltage (max. operating current): 125 V AC (0.08 A), 30 V DC (0.33 A)

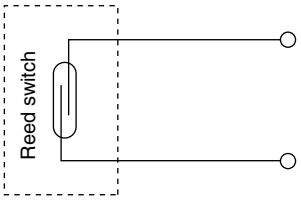


### Symbol U: With differential pressure switch (with indicator)

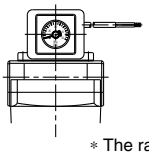

Saturation of the separator can be observed visually or by an electrical signal. (Element life check)

* The rated contact voltage is different from "S".

Max. contact capacity: 10 W DC
Rated contact voltage (max. operating current): 30 V DC (0.33 A)

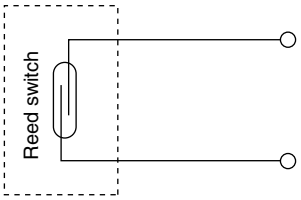

## How to Order

### AMD650/850

**AMD 650 – □ 10 □ □ – □ – □**

**Body size**

| |
|---|
| 650 |
| 850 |

**Thread type**

| Symbol | Type |
|---|---|
| Nil | Rc |
| F | G |
| N | NPT |

**Port size**

| Symbol | Size | Applicable body size | |
|---|---|---|---|
| | | 650 | 850 |
| 10 | 1 | ● | — |
| 14 | 1 1/2 | ● | ● |
| 20 | 2 | — | ● |

**Accessory**

| Symbol | Description |
|---|---|
| Nil | — |
| B | Bracket *1 |

*1 Bracket is included, (but not assembled).

**Auto drain** *2

| Symbol | Description |
|---|---|
| Nil | Drain cock (Without auto drain) *3 |
| D | N.O. auto drain |

*2 Refer to "Auto Drain Specifications/Option Combinations".
*3 Body size 850 is equipped with a ball valve (Rc3/8 female threaded). Mount a piping adapter IDF-AP609 (page 62) to the ball valve if NPT3/8 female threaded is required.

**Option** *2

| Symbol | Description |
|---|---|
| Nil | — |
| J | Drain guide 1/4 female threaded*4 |
| R | IN-OUT reversal direction |
| T | With element service indicator |

*4 Drain piping and piping for a stop valve such as ball valve are required.

**Made to Order**
("How to Order" and the applicable models are different from those shown on this page. Be sure to refer to "Made to Order".)

| Symbol | Description | Page for details |
|---|---|---|
| Nil | — | — |
| X6 | With differential pressure gauge (GD40-2-01) | P.68 |
| X37 | With differential pressure switch (With indicator, 125 VAC, 30 VDC) | P.68 |
| X15 | With IN-OUT flange | P.69 |
| X17 | With differential pressure gauge (GD40-2-01) and IN-OUT flange | P.69 |
| X26 | N.C., N.O. auto drain, drain piping type | P.70 |
| X12 | White vaseline specifications | P.70 |

Note) Refer to "How to Order Bowl Assembly" on page 63.

### Auto Drain Specifications/ Option Combinations

◎: Available ■: Not available

| Auto drain specifications/Option | | | Auto drain specifications | Option | | | Applicable model | |
|---|---|---|---|---|---|---|---|---|
| | | | D | J | R | T | AMD650 | AMD850 |
| Auto drain specifications | N.O. auto drain | D | ■ | ■ | ◎ | ◎ | ◎ | ◎ |
| Option | Drain guide 1/4 | J | ■ | ■ | ◎ | ◎ | ◎ | ■ |
| | IN-OUT reversal direction | R | ◎ | ◎ | ■ | ◎ | ◎ | ◎ |
| | With element service indicator | T | ◎ | ◎ | ◎ | ■ | ◎ | ◎ |

### Free standing type AMD800/810 to 10□0

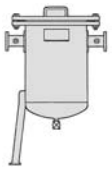

**AMD 8 00 – 20**

**Body size**

| |
|---|
| 8 |
| 9 |
| 10 |

**Type**

| Symbol | Description |
|---|---|
| 00 | With manual drain cock |
| 10 | With auto drain |

**Port size**

| Symbol | Size | Applicable body size | | |
|---|---|---|---|---|
| | | AMD800, 810 | AMD9□0 | AMD10□0 |
| 20 | 50(2B)JIS 10K FF flange | ● | ● | — |
| 30 | 80(3B)JIS 10K FF flange | — | ● | — |
| 40 | 100(4B)JIS 10K FF flange | — | ● | ● |
| 60 | 150(6B)JIS 10K FF flange | — | — | ● |

### Piping support type AMD801/811/9□1

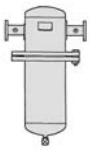

**AMD 8 01 – 20**

**Body size**

| |
|---|
| 8 |
| 9 |

**Type**

| Symbol | Description |
|---|---|
| 01 | With manual drain cock |
| 11 | With auto drain |

**Port size**

| Symbol | Size | Applicable body size | |
|---|---|---|---|
| | | AMD8□1 | AMD9□1 |
| 20 | 50(2B)JIS 10K FF flange | ● | — |
| 30 | 80(3B)JIS 10K FF flange | — | ● |
| 40 | 100(4B)JIS 10K FF flange | — | ● |

## Model Selection

Select a model in accordance with the following procedure taking the inlet pressure and the max. air flow rate into consideration.
(Example) Inlet pressure: 0.6 MPa
Max. air flow rate: 5 m³/min (ANR)

1. Obtain the intersecting point A of inlet pressure and max. air flow rate in the graph.
2. The AMD650 is obtained when the max. flow line is above the intersecting point A in the graph.

Note) Make sure to select a model that has the max. flow line above the obtained intersecting point. With a model that has the max. flow line below the obtained intersecting point, the flow rate will be exceeded, thus leading to a problem such as being unable to satisfy the specifications.

## Maximum Air Flow

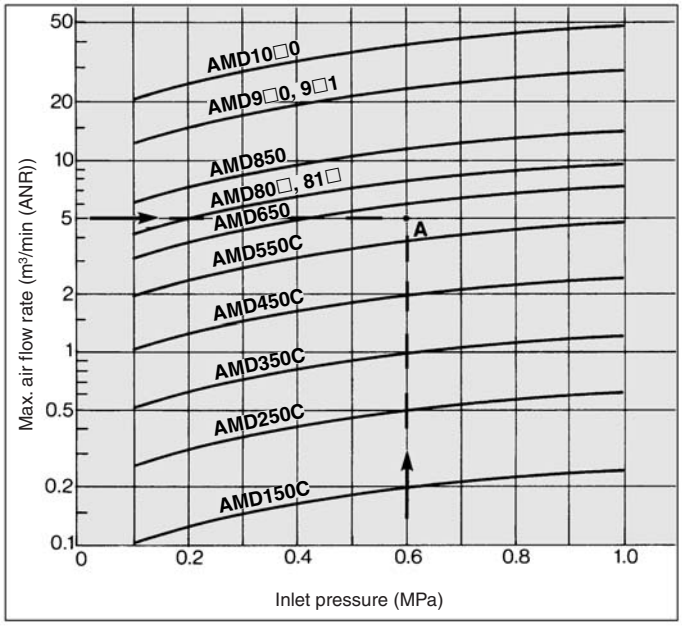

## Flow Characteristics/Select the model taking the max. flow capacity into consideration. (—— Element oil saturation ---- Initial condition)

Note) Compressed air over max. flow line in the table below may not meet the specifications of the product.
It may cause damage to the element.

### AMD150C

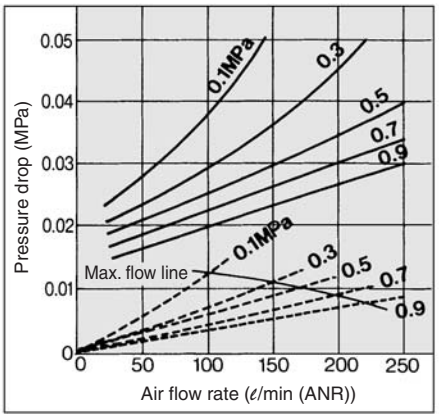


### AMD550C

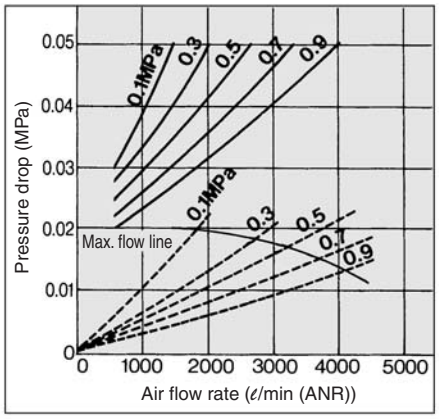


### AMD9□0/9□1

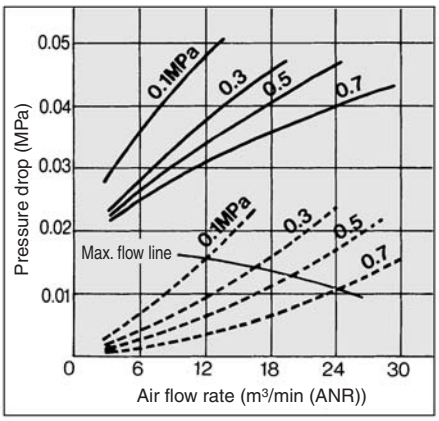


### AMD250C

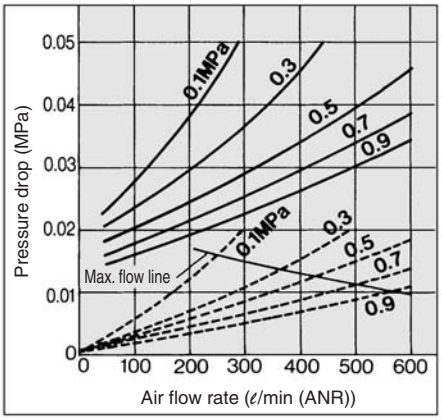


### AMD650

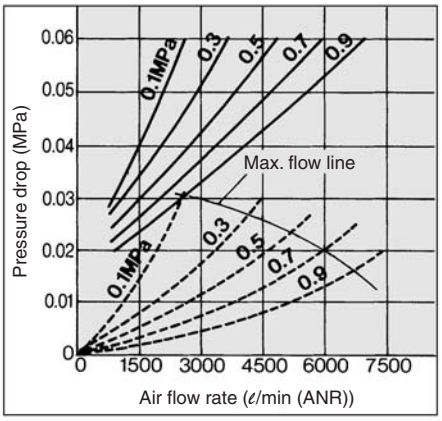


### AMD10□0

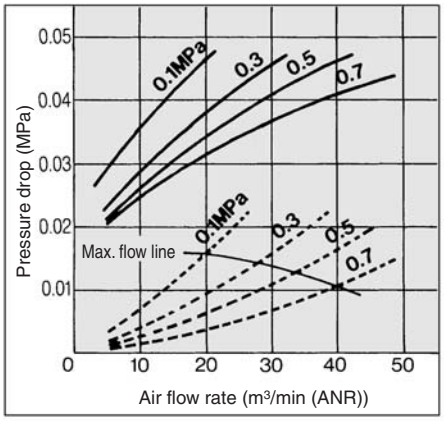


### AMD350C

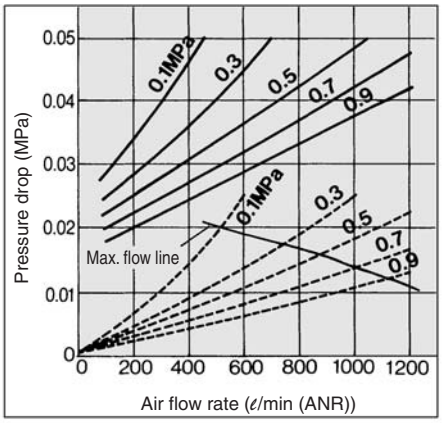


### AMD80□/81□

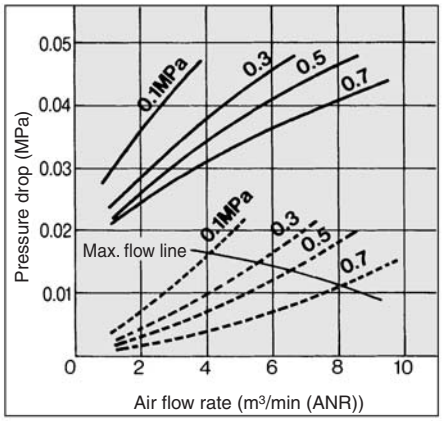


### AMD450C

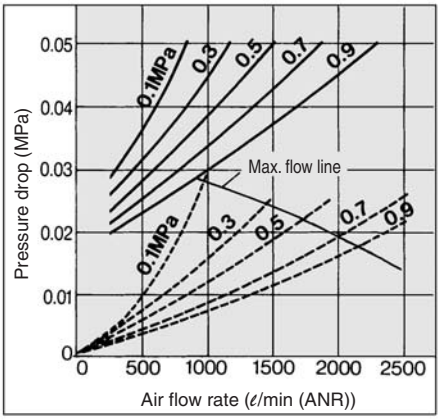


### AMD850

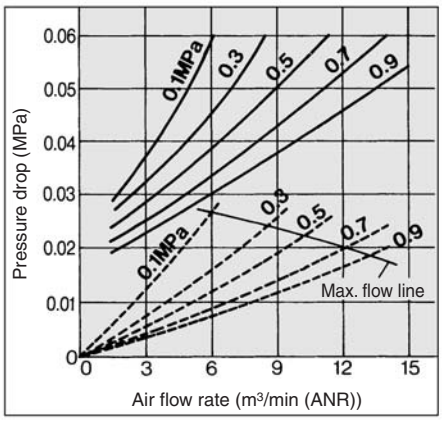

## Construction

### AMD150C to 550C, AMD650

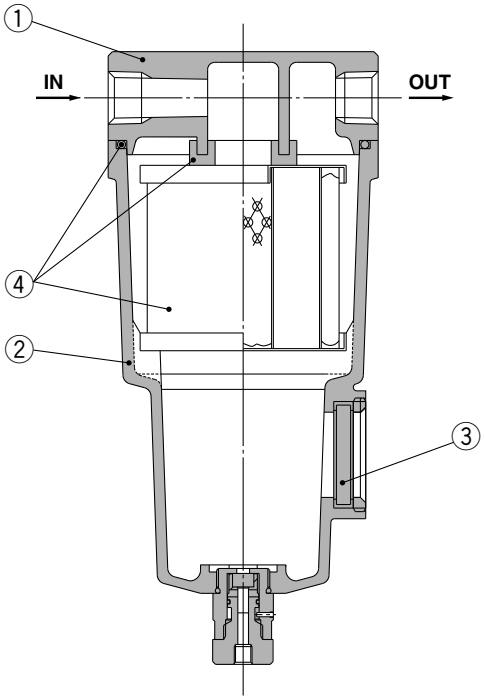


### AMD850

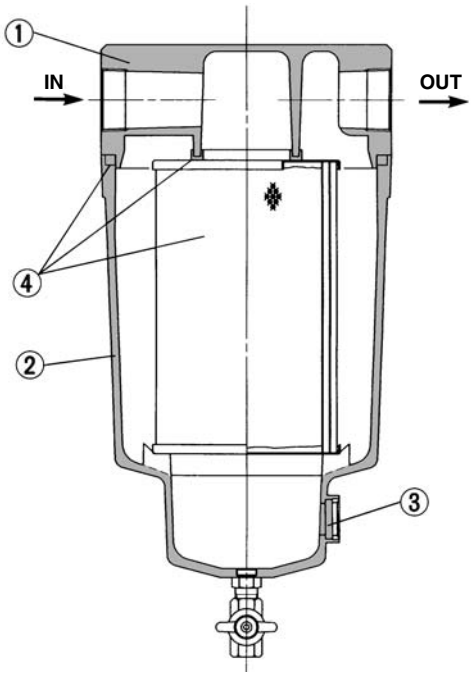


### Component Parts

| No. | Description | Material | Note |
|---|---|---|---|
| 1 | **Body** | Aluminum die-casted | Chrome treated |
| 2 | **Housing** | Aluminum die-casted* | Epoxy coating on inner surface |
| 3 | **Sight glass** | Tempered glass | — |

∗ The AMD850 is aluminum casted.

Note) Refer to "How to Order Bowl Assembly" on page 63.

Note) Sight glass is indicated in the figure for easy understanding of component parts. However, it differs from the actual construction. Refer to dimensions on pages 31 through to 34 for details.

### Replacement Parts

| No. | Description | Material | Applicable model | Model | | | | | | |
|---|---|---|---|---|---|---|---|---|---|---|
| | | | | **AMD150C** | **AMD250C** | **AMD350C** | **AMD450C** | **AMD550C** | **AMD650** | **AMD850** |
| 4 | **Element assembly** | Glass fiber, others | Except option F | AMD-EL150 | AMD-EL250 | AMD-EL350 | AMD-EL450 | AMD-EL550 | AMD-EL650 | AMD-EL850 |
| | | | For option F | AMD-EL150-F | AMD-EL250-F | AMD-EL350-F | AMD-EL450-F | AMD-EL550-F | — | — |

∗ Element assembly: With gasket (1 pc.) and O-ring (1 pc.)
∗ Refer to back page 6 for replacement of auto drain.
∗ Element assemblies for Made to Order (X6, X12, X15, X17, X20, X26, X37) are same as those for standard (see the above table).

### AMD80□/81□/9□0/9□1/10□0

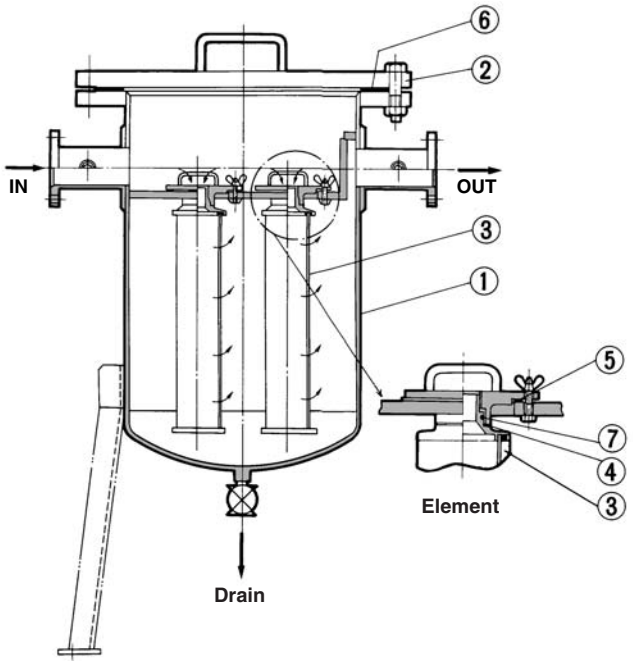


### Component Parts/Material

| No. | Description | Model | | Note |
|---|---|---|---|---|
| | | **AMD800/810/9□0/10□0** | **AMD801/811/9□1** | |
| 1 | **Filter case** | SGP-E, SS400 | SGP-E, SS400 | |
| 2 | **Cover** | SS400 | SGP-E, SS400 | |

### Replacement Parts

| No. | Description | Material | Model | | | | |
|---|---|---|---|---|---|---|---|
| | | | **AMD800/810** | **AMD801/811** | **AMD9□0** | **AMD9□1** | **AMD10□0** |
| 3 | **Element** | — | 63174 | 63174 | 63174 3 pcs. | 63174 3 pcs. | 63174 5 pcs. |
| 4 | **Seal** | NBR | 63148 | 63148 | 63148 3 pcs. | 63148 3 pcs. | 63148 5 pcs. |
| 5 | **Seal** | NBR | O.D112 x I.D90 x T3 | — | O.D112 x I.D90 x T3 3 pcs. | — | O.D112 x I.D90 x T3 5 pcs. |
| 6 | **Gasket** | V#6500 | AL-61S | AL-60S | AL-63S | AL-62S | AL-31S |
| 7 | **O-ring** | NBR | JIS B2401G35 1 pc. | JIS B2401G35 1 pc. | JIS B2401G35 3 pcs. | JIS B2401G35 3 pcs. | JIS B2401G35 5 pcs. |

## Dimensions

### AMD150C to 550C

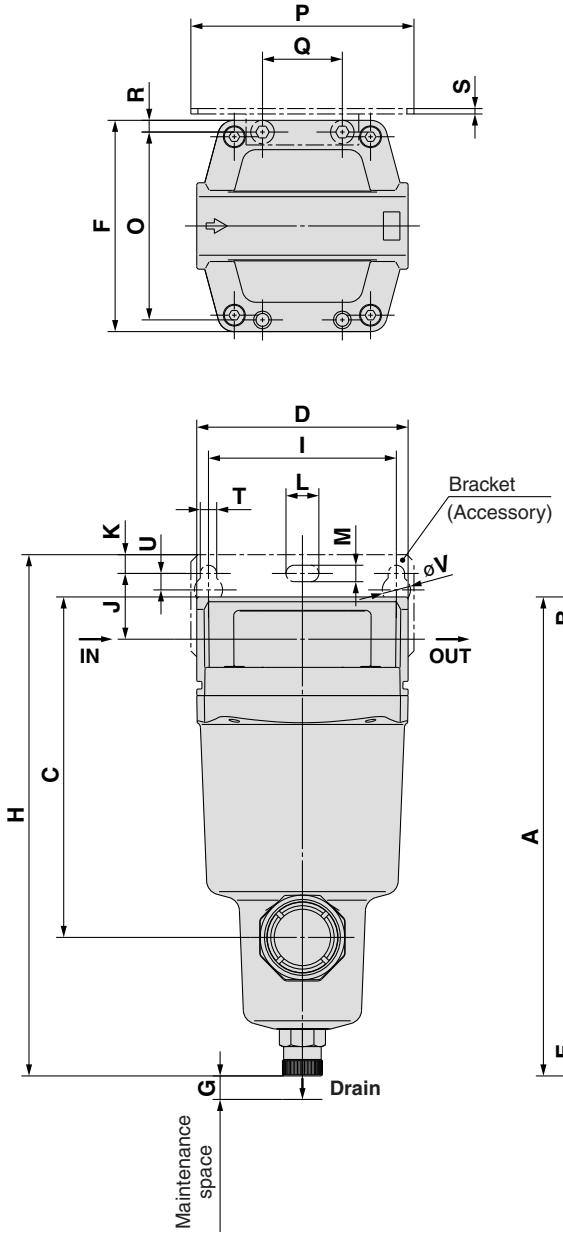


### Auto drain

**C: With auto drain (N.C.)**
**D: With auto drain (N.O.)**

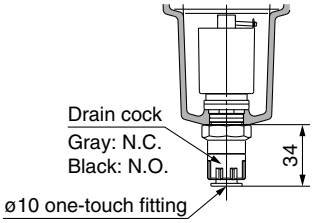


**Combination of D: With auto drain (N.O.) and H: For medium air pressure**

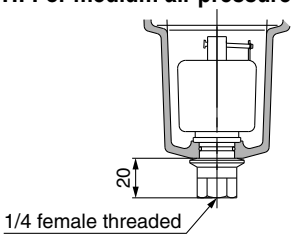


### Option

**J: Drain guide 1/4 female threaded**

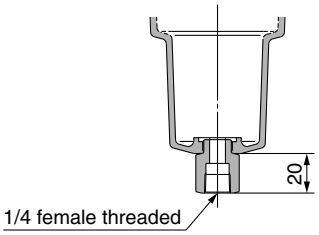


**S, U: With differential pressure switch (with indicator)**

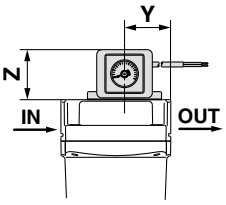


**T: With element service indicator**

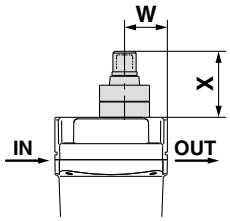


(mm)

| Model | Port size | A | B | C | D | E | F | G | Bracket related dimensions | | | | | | | | | | | | | | | Element service indicator related dimensions | | Differential pressure switch related dimensions | |
|---|---|---|---|---|---|---|---|---|---|---|---|---|---|---|---|---|---|---|---|---|---|---|---|---|---|---|---|
| | | | | | | | | | H | I | J | K | T | U | L | M | V | N | O | P | Q | R | S | W | X | Y | Z |
| **AMD150C** | 1/8, 1/4 | 158 | 10 | 99 | 63 | 20 | 63 | 10 | 173 | 56 | 20 | 5 | 6 | 6 | 12 | 6 | 10 | 35 | 54 | 70 | 26 | 4.5 | 1.6 | 24 | 37 | 32 | 41 |
| **AMD250C** | 1/4, 3/8 | 172 | 14 | 113 | 76 | 20 | 76 | 10 | 190 | 66 | 24 | 8 | 6 | 6 | 12 | 6 | 10 | 40 | 66 | 80 | 28 | 5 | 2 | 27 | 37 | 36 | 41 |
| **AMD350C** | 3/8, 1/2 | 204 | 18 | 145 | 90 | 20 | 90 | 10 | 222 | 80 | 28 | 8 | 7 | 7 | 14 | 7 | 12 | 50 | 80 | 95 | 34 | 5 | 2.3 | 32 | 37 | 42 | 41 |
| **AMD450C** | 1/2, 3/4 | 225 | 20 | 166 | 106 | 20 | 106 | 10 | 246 | 90 | 31 | 10 | 9 | 9 | 18 | 9 | 15 | 55 | 88 | 111 | 50 | 9 | 3.2 | 37 | 37 | 43 | 41 |
| **AMD550C** | 3/4, 1 | 259 | 24 | 200 | 122 | 20 | 122 | 15 | 278 | 100 | 33 | 10 | 9 | 9 | 18 | 9 | 15 | 65 | 102 | 126 | 60 | 10 | 3.2 | 39 | 37 | 51 | 41 |

## Dimensions

### AMD150C to 550C, AMD650

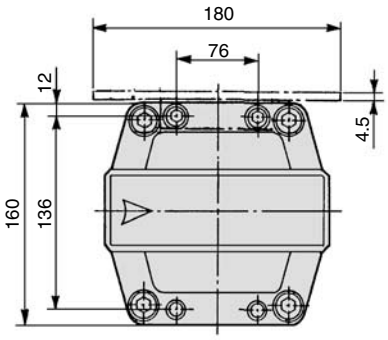


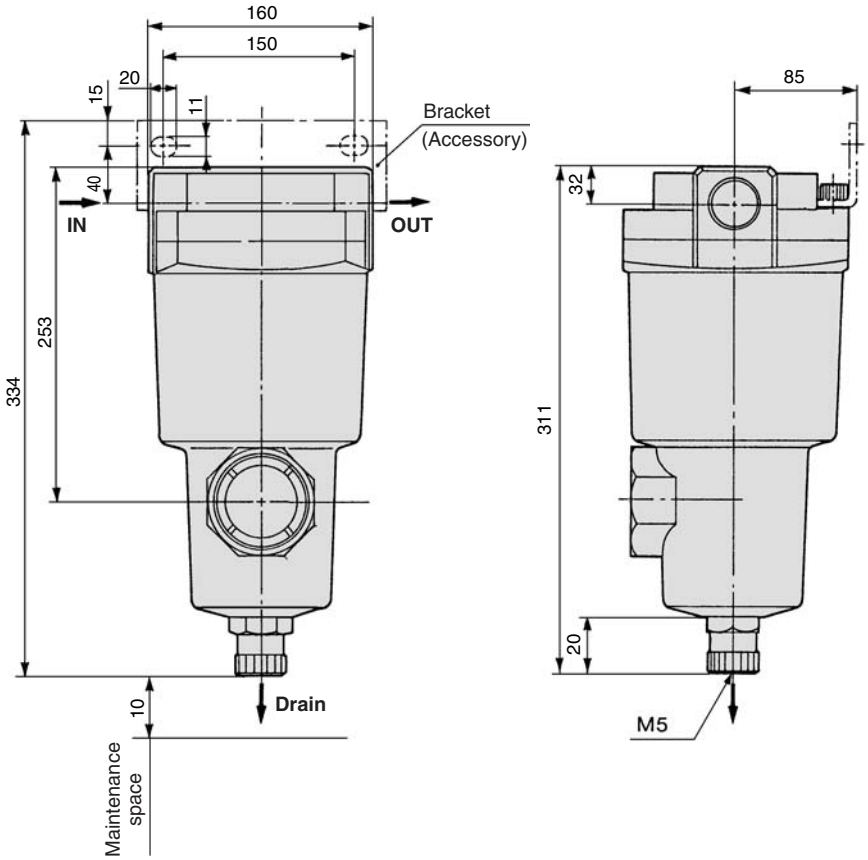


**Auto drain**

**D: With auto drain (N.O.)**

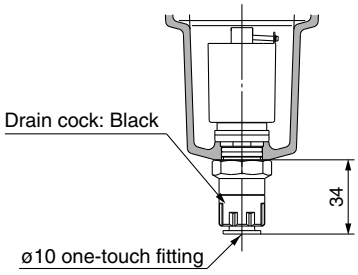


**Option**

**J: Drain guide 1/4 female threaded**

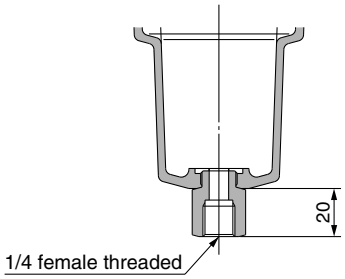


**T: With element service indicator**

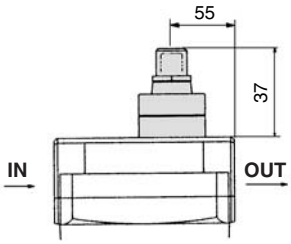

## Dimensions

### AMD850

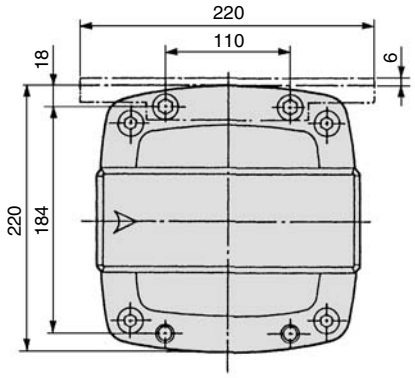


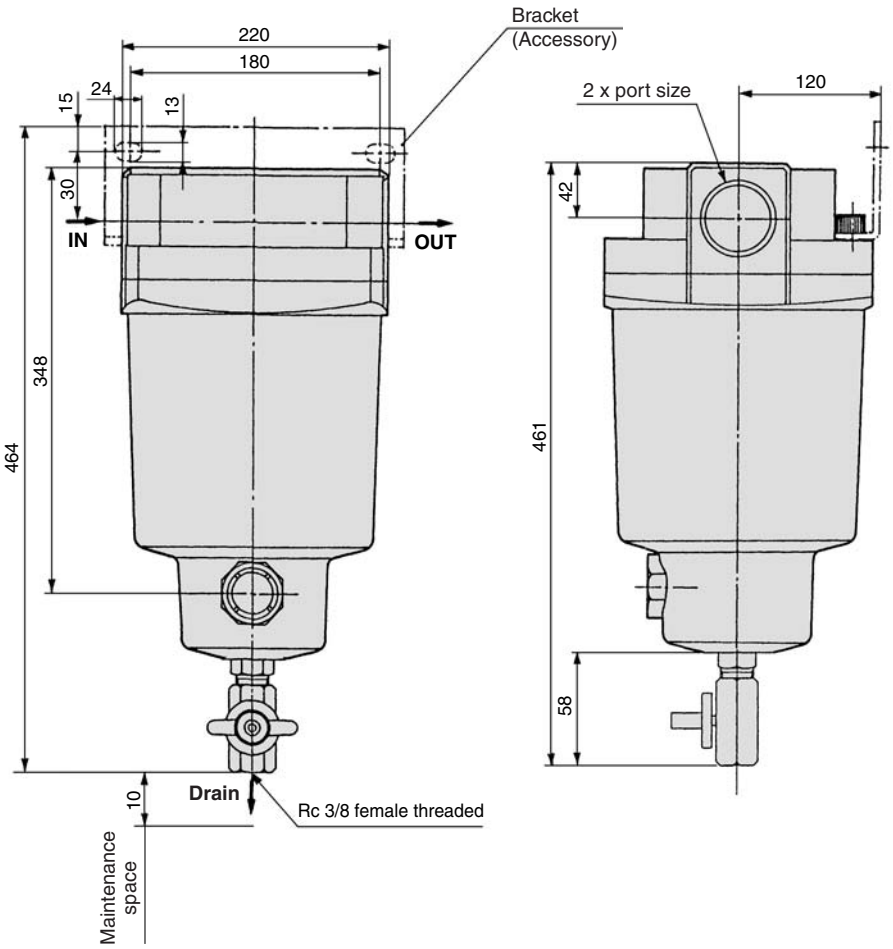


**Auto drain**

**D: With auto drain (N.O.) for AMD850**

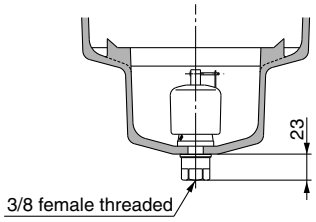


**Option**

**T: With element service indicator**

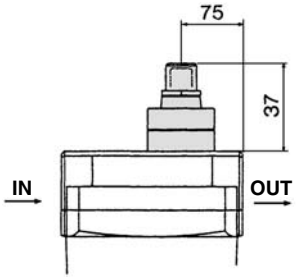

## Dimensions

### AMD801/811/9□1

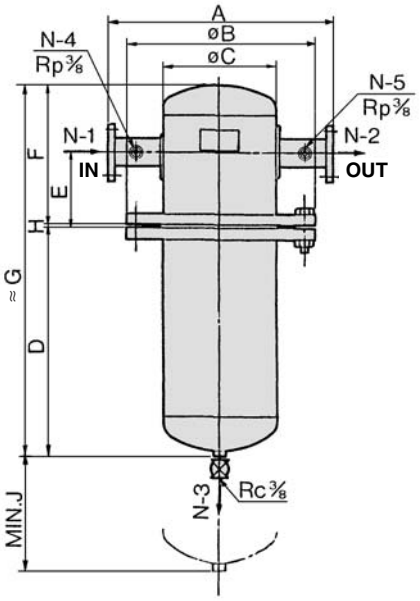


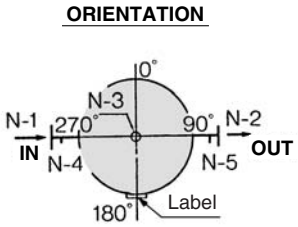


(mm)

| Model | Connection (Flange) | A | øB | øC | D | E | F | G | H | J |
|---|---|---|---|---|---|---|---|---|---|---|
| **AMD801/811** | 50(2B)JIS 10K FF flange | 400 | 280 | 150(6B) | 760 | 150 | 270 | 1033 | 3 | 887 |
| **AMD9□1** | 50(2B), 80(3B), 100(4B)JIS 10K FF flange | 620 | 445 | 300(12B) | 795 | 300 | 520 | 1318 | 3 | 972 |

### AMD800/810/9□0/10□0

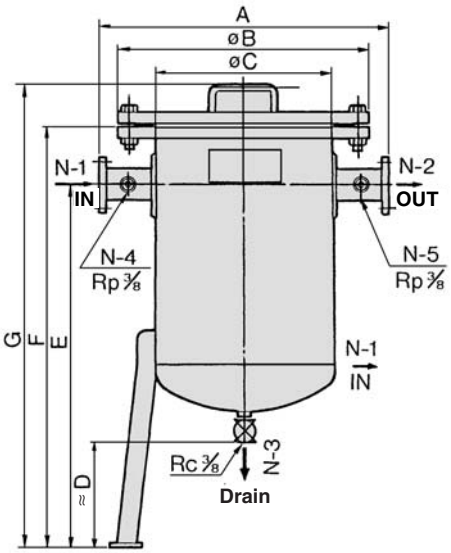


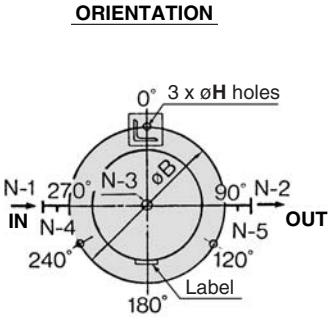


(mm)

| Model | Connection (Flange) | A | øB | øC | D | E | F | G | H | Anchor bolt |
|---|---|---|---|---|---|---|---|---|---|---|
| **AMD800/810** | 50(2B), 80(3B)JIS 10K FF flange | 500 | 300 | 200(8B) | 300 | 1300 | 1430 | 1520 | 20 | M16 x ℓ400 |
| **AMD9□0** | 50(2B), 80(3B), 100(4B)JIS 10K FF flange | 720 | 560 | 400 | 300 | 1320 | 1480 | 1585 | 24 | M20 x ℓ500 |
| **AMD10□0** | 100(4B), 150(6B)JIS 10K FF flange | 870 | 745 | 550 | 300 | 1380 | 1610 | 1740 | 24 | M20 x ℓ500 |

# Odor Removal Filter
# *Series AMF*

**Efficiently can remove odor in compressed air with an activated carbon element. The unit is designed for use in the area such as a clean room where odors must be avoided.**

**Can remove odor and gas ingredients in compressed air.**
**Activated carbon element with large filtration area.**
**Easy replacement of elements.**

**Modular connection is possible with AMF150C to 550C.**
**(For details, refer to page 61.)**

**AMF150C to 350C AMF450C/550C**

**AMF650/850**

**Symbol**

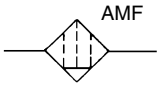


Made to Order

**Made to Order**
**(For details, refer to page 67.)**

## Model

| Model | AMF150C | AMF250C | AMF350C | AMF450C | AMF550C | AMF650 | AMF850 |
|---|---|---|---|---|---|---|---|
| Rated flow (ℓ/min (ANR)) Note) | 200 | 500 | 1000 | 2000 | 3700 | 6000 | 12000 |
| Port size | 1/8, 1/4 | 1/4, 3/8 | 3/8, 1/2 | 1/2, 3/4 | 3/4, 1 | 1, 1 1/2 | 1 1/2, 2 |
| Mass (kg) | 0.3 | 0.48 | 0.8 | 1.3 | 2.0 | 4.2 | 10.5 |

Note) Max. flow at 0.7 MPa.
Max. flow varies depending on the operating pressure.
Refer to “Flow Characteristics” (page 55) and “Maximum Air Flow” (page 54).

## Model/Free Standing Type

| Model | AMF800 | AMF900 | AMF1000 |
|---|---|---|---|
| Rated flow (ℓ/min (ANR)) | 8000 | 24000 | 40000 |
| Port size | 50(2B)JIS 10K FF flange | 50(2B), 80(3B),100(4B)JIS 10K FF flange | 100(4B),150(6B)JIS 10K FF flange |
| Mass (kg) | 90 | 200 | 410 |

## Model/Piping Support Type

| Model | AMF801 | AMF901 |
|---|---|---|
| Rated flow (ℓ/min (ANR)) | 8000 | 24000 |
| Port size | 50(2B)JIS 10K FF flange | 50(2B), 80(3B),100(4B)JIS 10K FF flange |
| Mass (kg) | 40 | 120 |

## Specifications

| | |
|---|---|
| **Fluid** | Compressed air |
| **Max. operating pressure** | 1.0 MPa |
| **Min. operating pressure** | 0.05 MPa |
| **Proof pressure** | 1.5 MPa |
| **Ambient and fluid temperature** | 5 to 60°C |
| **Nominal filtration rating** | 0.01 μm (Filtration efficiency: 99.9%) |
| **Cleanliness at outlet** | Less than 100 particles of 0.3 μm or larger per cubic foot [Less than 35 particles per 10 liters (ANR)] (The “AME” series is required on the inlet side.) |
| **Oil mist density at outlet** | Max. 0.004 mg/m³ (ANR) (≈0.0032 ppm) (The “AME” series is required on the inlet side.) |

## Accessory (Option)

| Applicable model | AMF150C | AMF250C | AMF350C | AMF450C | AMF550C | AMF650 | AMF850 |
|---|---|---|---|---|---|---|---|
| Bracket assembly (with 2 mounting screws) | AM-BM101 | AM-BM102 | AM-BM103 | AM-BM104 | AM-BM105 | BM56 | BM57 |

## ⚠ Caution

**Be sure to read this before handling.**
**Refer to back pages 1 and 2 for Safety Instructions, “Precautions for Handling Pneumatic Devices” (M-03-E3A) for Common Precautions, and back pages 3 through to 7 for Specific Product Precautions.**

## How to Order

### AMF150C to 550C

**AMF 550C – □ 10 □ – □**

**Body size**

| |
|---|
| 150C |
| 250C |
| 350C |
| 450C |
| 550C |

**Thread type**

| Symbol | Type |
|---|---|
| Nil | Rc |
| F | G*1 |
| N | NPT |

*1 Conforms to ISO1179-1.

**Accessory**

| Symbol | Description |
|---|---|
| Nil | — |
| B | Bracket *2 |

*2 Bracket is included, (but not assembled).

**Port size**

| Symbol | Size | Applicable body size | | | | |
|---|---|---|---|---|---|---|
| | | 150C | 250C | 350C | 450C | 550C |
| 01 | 1/8 | ● | | | | |
| 02 | 1/4 | ● | ● | | | |
| 03 | 3/8 | | ● | ● | | |
| 04 | 1/2 | | | ● | ● | |
| 06 | 3/4 | | | | ● | ● |
| 10 | 1 | | | | | ● |

**Option**

| Symbol | Description |
|---|---|
| Nil | — |
| F | Rubber material: Fluororubber |
| H | For medium air pressure (1.6 MPa) |
| R | IN-OUT reversal direction |
| V | Degreasing wash,*3 white vaseline |

*3 Only body/housing is degreasing washed.

## Options

**Symbol F: Rubber material: Fluororubber**

Fluororubber is used for the parts such as O-ring and gasket.

**Symbol H: For medium air pressure (1.6 MPa)**

Can be used up to 1.6 MPa at maximum.

**Symbol R: IN-OUT reversal direction**

Air flow in the separator is changed to right to left.
(Air flow direction of the standard: Left to right.)

**Symbol V: Degreasing wash, white vaseline**

Body/housing is degreasing washed. The lubrication grease for O-ring and gasket is changed to white vaseline.

## How to Order

### AMF650/850

**AMF 650 – □ 10 □ – □ – □**

**Body size**

| |
|---|
| 650 |
| 850 |

**Thread type**

| Symbol | Type |
|---|---|
| Nil | Rc |
| F | G |
| N | NPT |

**Port size**

| Symbol | Size | Applicable body size | |
|---|---|---|---|
| | | 650 | 850 |
| 10 | 1 | ● | — |
| 14 | 1 1/2 | ● | ● |
| 20 | 2 | — | ● |

**Accessory**

| Symbol | Description |
|---|---|
| Nil | — |
| B | Bracket* |

* Bracket is included, (but not assembled).

**Option**

| Symbol | Description |
|---|---|
| Nil | — |
| R | IN-OUT reversal direction |

**Made to Order**

("How to Order" and the applicable models are different from those shown on this page. Be sure to refer to "Made to Order".)

| Symbol | Description | Page for details |
|---|---|---|
| Nil | — | — |
| X12 | White vaseline specifications | P.70 |

Note) Refer to "How to Order Bowl Assembly" on page 63.

### Free standing type AMF800 to 1000

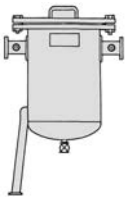

**AMF 80 0 – 20**

**Body size**

| |
|---|
| 80 |
| 90 |
| 100 |

**Vessel shape**

Free standing type

**Port size**

| Symbol | Size | Applicable body size | | |
|---|---|---|---|---|
| | | 800 | 900 | 1000 |
| 20 | 50(2B)JIS 10K FF flange | ● | ● | — |
| 30 | 80(3B)JIS 10K FF flange | — | ● | — |
| 40 | 100(4B)JIS 10K FF flange | — | ● | ● |
| 60 | 150(6B)JIS 10K FF flange | — | — | ● |

### Piping support type AMF801/901

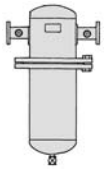

**AMF 80 1 – 20**

**Body size**

| |
|---|
| 80 |
| 90 |

**Vessel shape**

Piping support type

**Port size**

| Symbol | Size | Applicable body size | |
|---|---|---|---|
| | | 801 | 901 |
| 20 | 50(2B)JIS 10K FF flange | ● | ● |
| 30 | 80(3B)JIS 10K FF flange | — | ● |
| 40 | 100(4B)JIS 10K FF flange | — | ● |

## Model Selection

Select a model in accordance with the following procedure taking the inlet pressure and the max. air flow rate into consideration.

(Example) Inlet pressure: 0.6 MPa
Max. air flow rate: 5 m³/min (ANR)

1. Obtain the intersecting point A of inlet pressure and max. air flow rate in the graph.
2. The AMF650 is obtained when the max. flow line is above the intersecting point A in the graph.

Note) Make sure to select a model that has the max. flow line above the obtained intersecting point. With a model that has the max. flow line below the obtained intersecting point, the flow rate will be exceeded, thus leading to a problem such as being unable to satisfy the specifications.

## Maximum Air Flow

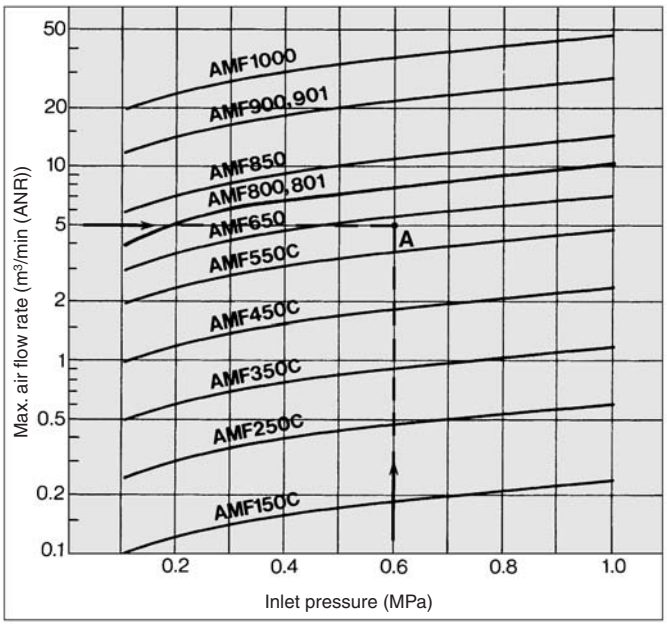

## Flow Characteristics/Refer to "Model Selection" on page 54. (Element initial condition)

Note) Compressed air over max. flow line in the table below may not meet the specifications of the product.
It may cause damage to the element.

### AMF150C

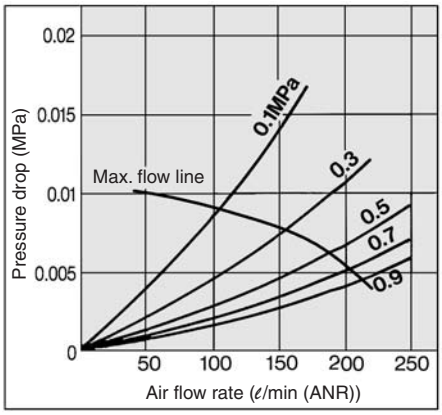


### AMF550C

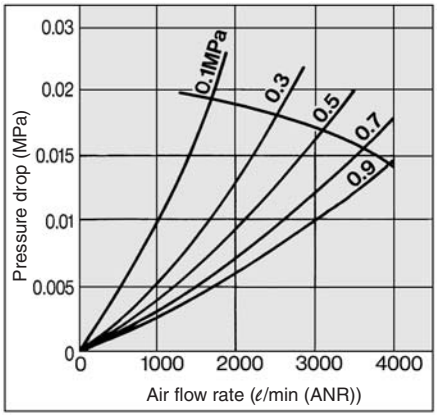


### AMF900/901

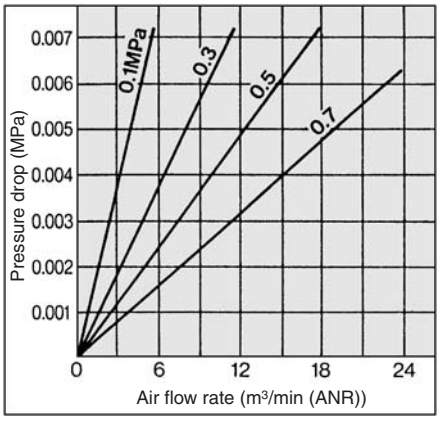


### AMF250C

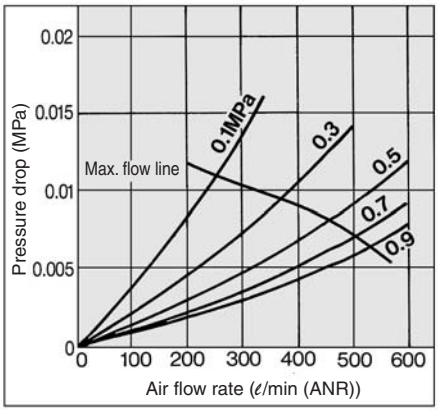


### AMF650

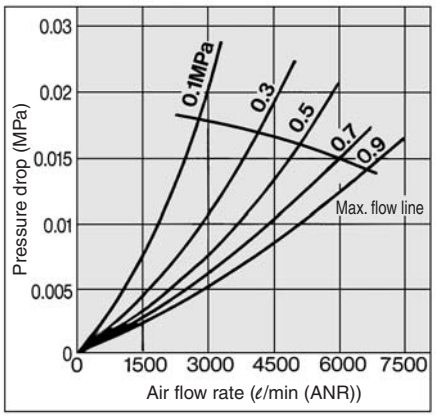


### AMF1000

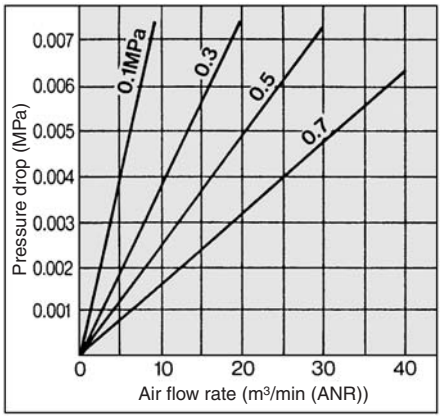


### AMF350C

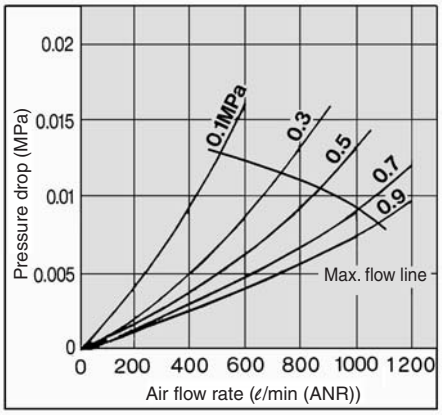


### AMF800/801

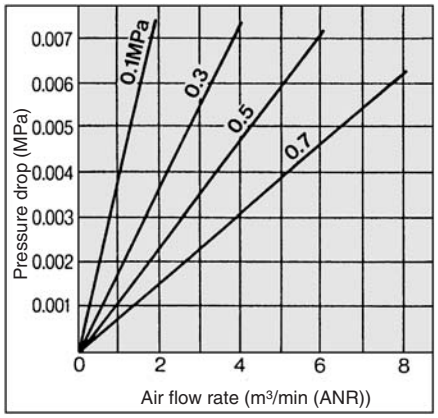


### AMF450C

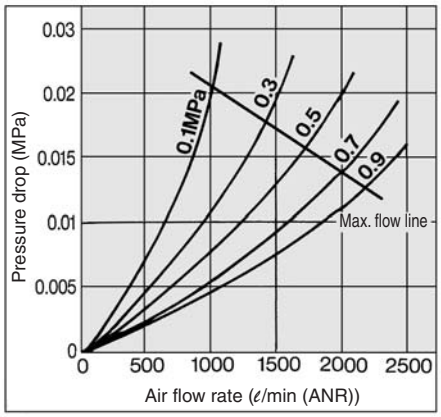


### AMF850

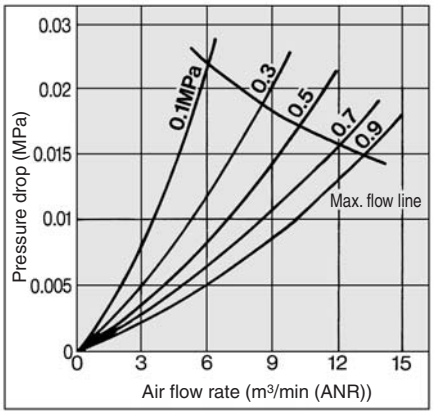

## Construction

### AMF150C to 550C

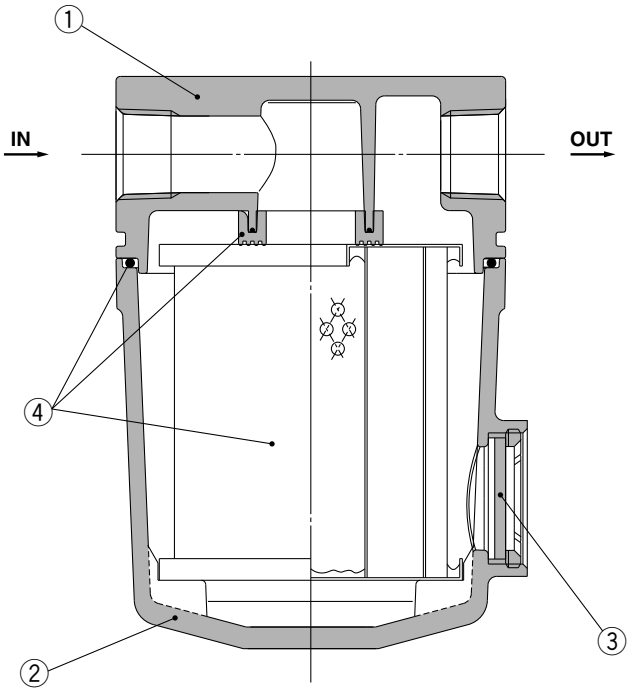


### AMF650/850

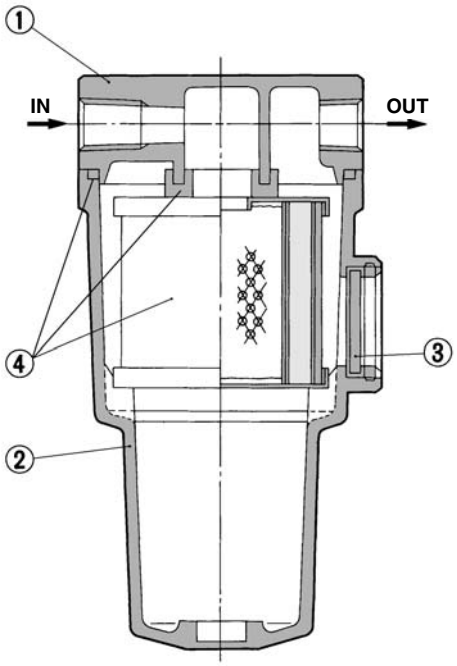


### Component Parts

| No. | Description | Material | Note |
|---|---|---|---|
| 1 | **Body** | Aluminum die-casted | Chrome treated |
| 2 | **Housing** | Aluminum die-casted* | Epoxy coating on inner surface |
| 3 | **Sight glass** | Tempered glass | — |

∗ The AMF850 is aluminum casted.

Note) Refer to "How to Order Bowl Assembly" on page 63.

Note) Sight glass is indicated in the figure for easy understanding of component parts. However, it differs from the actual construction. Refer to dimensions on pages 57 through to 60 for details.

### Replacement Parts

| No. | Description | Material | Applicable model | Model | | | | | | |
|---|---|---|---|---|---|---|---|---|---|---|
| | | | | **AMF150C** | **AMF250C** | **AMF350C** | **AMF450C** | **AMF550C** | **AMF650** | **AMF850** |
| 4 | **Element assembly** | Glass fiber, others | Except option F | AMF-EL150 | AMF-EL250 | AMF-EL350 | AMF-EL450 | AMF-EL550 | AMF-EL650 | AMF-EL850 |
| | | | For option F | AMF-EL150-F | AMF-EL250-F | AMF-EL350-F | AMF-EL450-F | AMF-EL550-F | — | — |

∗ Element assembly: With gasket (1 pc.) and O-ring (1 pc.)
∗ Element assemblies for Made to Order (X12, X20) are same as those for standard (see the above table).

### AMF80□/90□/1000

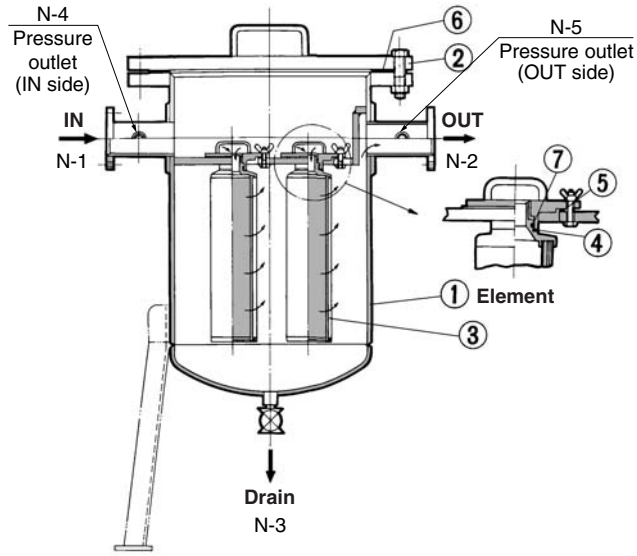


### Component Parts/Material

| No. | Description | Model | | Note |
|---|---|---|---|---|
| | | **AMF800/900/1000** | **AMF801/901** | |
| 1 | **Filter case** | SGP-E: SS400 | SGP-E: SS400 | |
| 2 | **Cover** | SS400 | SGP-E: SS400 | |

### Replacement Parts

| No. | Description | Material | Model | | | | |
|---|---|---|---|---|---|---|---|
| | | | **AMF800** | **AMF801** | **AMF900** | **AMF901** | **AMF1000** |
| 3 | **Element** | — | 63271 | 63271 | 63271 3 pcs. | 63271 3 pcs. | 63271 5 pcs. |
| 4 | **Seal** | NBR | 63148 | 63148 | 63148 3 pcs. | 63148 3 pcs. | 63148 5 pcs. |
| 5 | **Seal** | NBR | O.D112 x I.D90 x T3 1 pc. | — | O.D112 x I.D90 x T3 3 pcs. | — | O.D112 x I.D90 x T3 5 pcs. |
| 6 | **Gasket** | V#6500 | AL-61S | AL-60S | AL-63S 3 pcs. | AL-62S | AL-31S |
| 7 | **O-ring** | NBR | JIS B2401G35 1 pc. | JIS B2401G35 1 pc. | JIS B2401G35 3 pcs. | JIS B2401G35 3 pcs. | JIS B2401G35 5 pcs. |

## Dimensions

### AMF150C to 350C

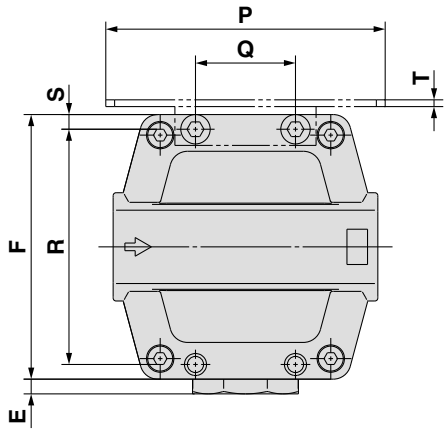


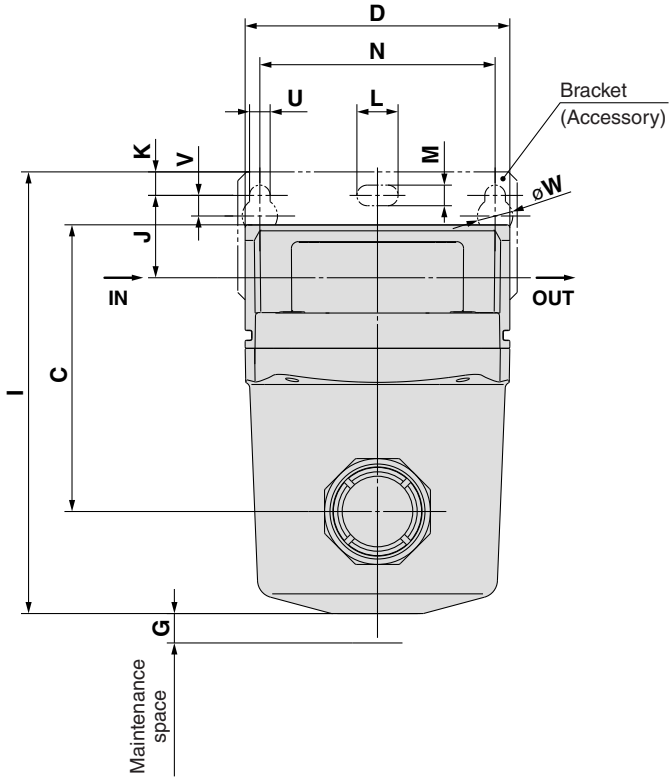


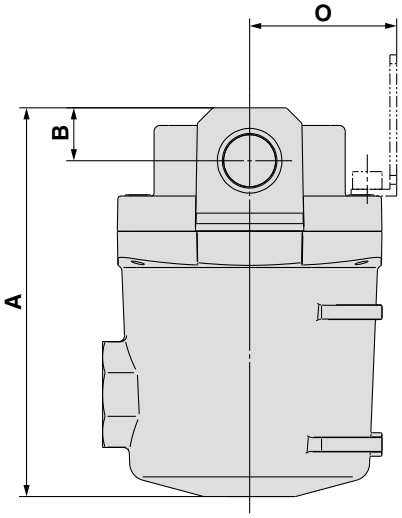


(mm)

| Model | Port size | A | B | C | D | E | F | G | Bracket related dimensions | | | | | | | | | | | | | |
|---|---|---|---|---|---|---|---|---|---|---|---|---|---|---|---|---|---|---|---|---|---|---|
| | | | | | | | | | I | N | J | K | U | V | L | M | W | O | P | Q | R | S | T |
| **AMF150C** | 1/8, 1/4 | 83 | 10 | 54 | 63 | 7.5 | 63 | 10 | 98.5 | 56 | 20 | 5 | 6 | 6 | 12 | 6 | 10 | 35 | 70 | 26 | 54 | 4.5 | 1.6 |
| **AMF250C** | 1/4, 3/8 | 103 | 14 | 73 | 76 | 5 | 76 | 10 | 121 | 66 | 24 | 8 | 6 | 6 | 12 | 6 | 10 | 40 | 80 | 28 | 66 | 5 | 2 |
| **AMF350C** | 3/8, 1/2 | 132 | 18 | 98 | 90 | 5 | 90 | 10 | 150 | 80 | 28 | 8 | 7 | 7 | 14 | 7 | 12 | 50 | 95 | 34 | 80 | 5 | 2.3 |

## Dimensions

### AMF450C/550C

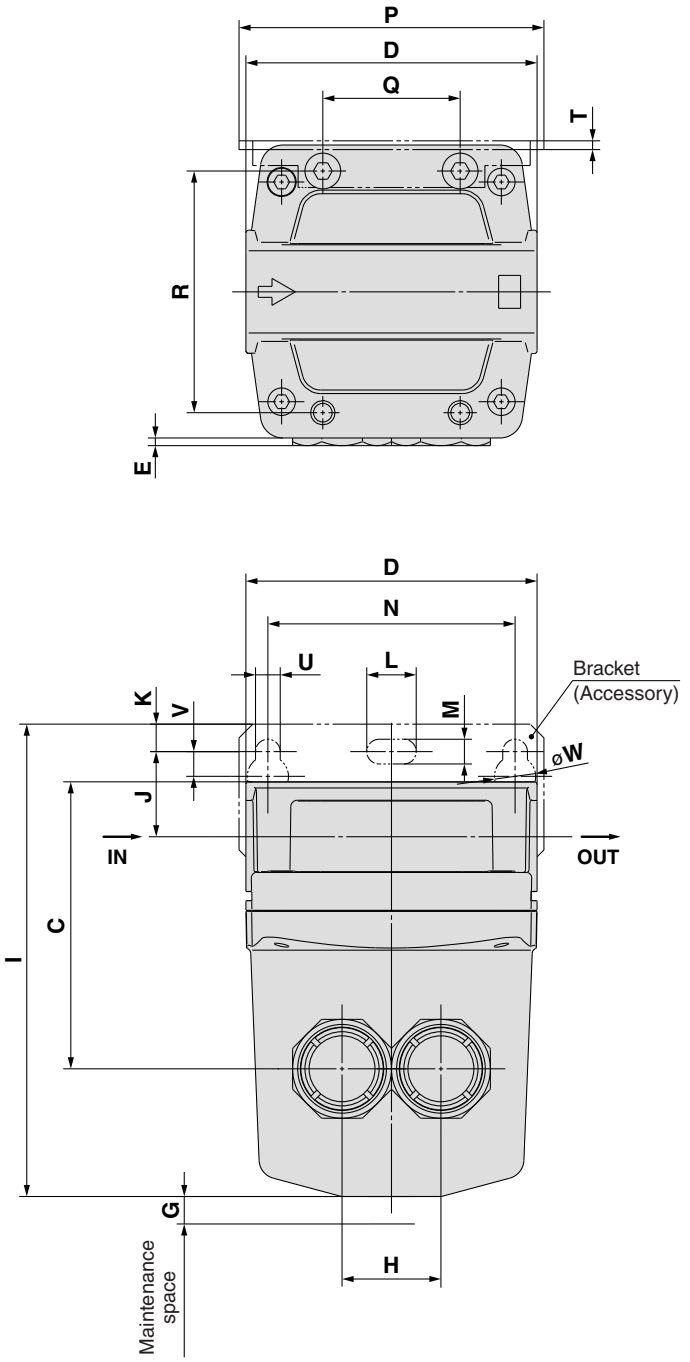


(mm)

| Model | Port size | A | B | C | D | E | F | G | H | Bracket related dimensions | | | | | | | | | | | | | |
|---|---|---|---|---|---|---|---|---|---|---|---|---|---|---|---|---|---|---|---|---|---|---|---|
| | | | | | | | | | | I | N | J | K | U | V | L | M | W | O | P | Q | R | T |
| **AMF450C** | 1/2, 3/4 | 151 | 20 | 105 | 106 | 3 | 106 | 10 | 36 | 172 | 90 | 31 | 10 | 9 | 9 | 18 | 9 | 15 | 55 | 111 | 50 | 88 | 3.2 |
| **AMF550C** | 3/4, 1 | 187 | 24 | 130 | 122 | 3 | 122 | 15 | 44 | 206 | 100 | 33 | 10 | 9 | 9 | 18 | 9 | 15 | 65 | 126 | 60 | 102 | 3.2 |

## Dimensions

### AMF650/850

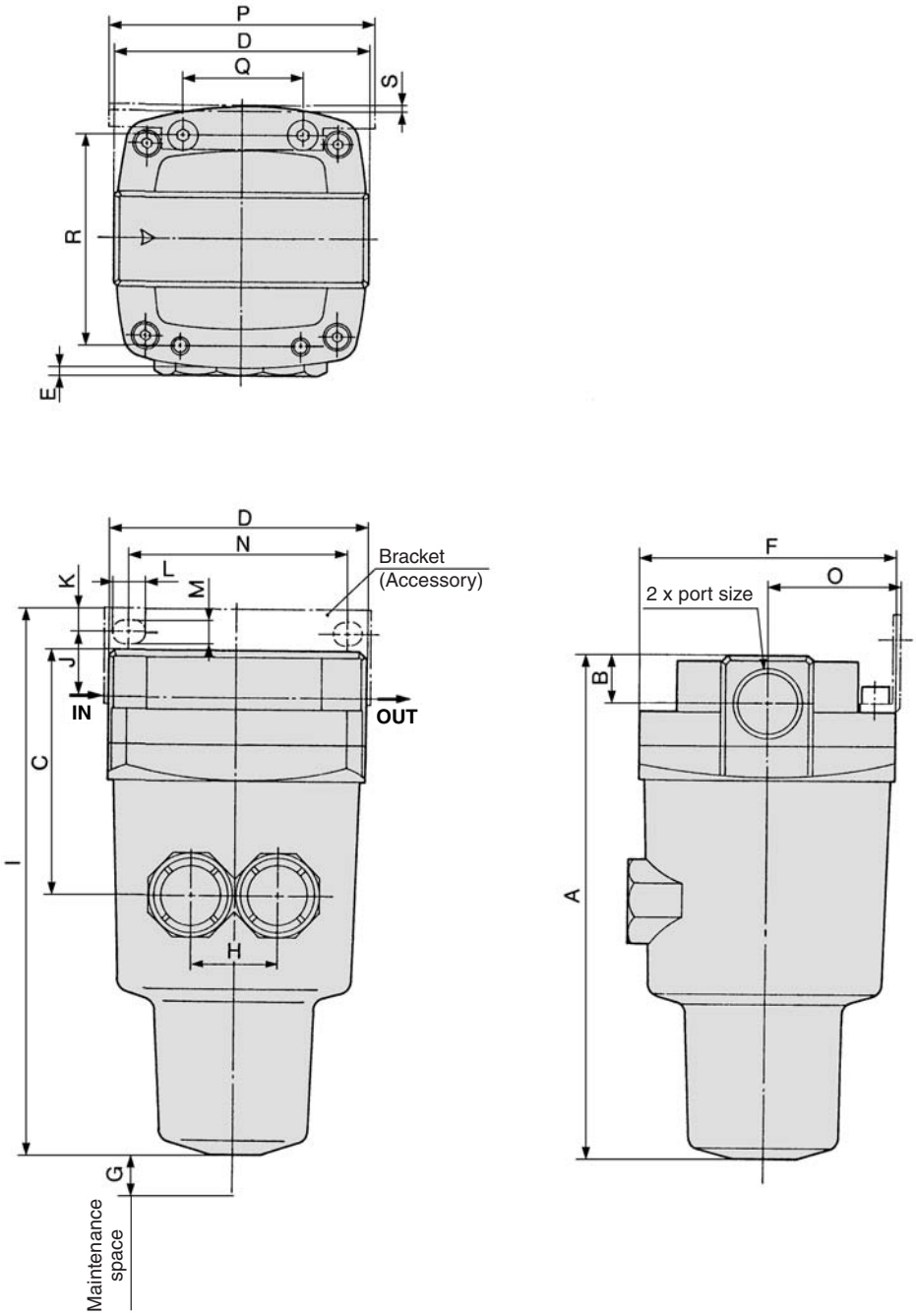


(mm)

| Model | Port size | A | B | C | D | E | F | G | H | Bracket related dimensions | | | | | | | | | | |
|---|---|---|---|---|---|---|---|---|---|---|---|---|---|---|---|---|---|---|---|---|
| | | | | | | | | | | I | J | K | L | M | N | O | P | Q | R | S |
| **AMF650** | 1, 1½ | 291 | 32 | 167 | 160 | — | 160 | 10 | 66 | 314 | 40 | 15 | 20 | 11 | 150 | 85 | 180 | 76 | 136 | 4.5 |
| **AMF850** | 1½, 2 | 403 | 42 | 235 | 220 | — | 220 | 10 | 96 | 406 | 30 | 15 | 24 | 13 | 180 | 120 | 220 | 110 | 184 | 6 |

## Dimensions

### AMF801/901

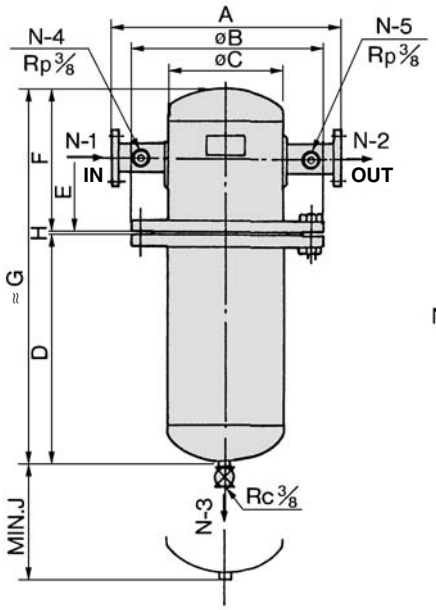


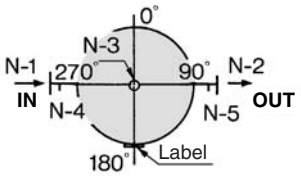


(mm)

| Model | Connection (Flange) | A | øB | øC | D | E | F | G | H | J |
|---|---|---|---|---|---|---|---|---|---|---|
| **AMF801** | 50(2B)JIS 10K FF flange | 400 | 280 | 150(6B) | 550 | 150 | 270 | 823 | 3 | 797 |
| **AMF901** | 50(2B), 80(3B), 100(4B)JIS 10K FF flange | 620 | 445 | 300(12B) | 570 | 300 | 520 | 1093 | 3 | 867 |

### AMF800/900/1000

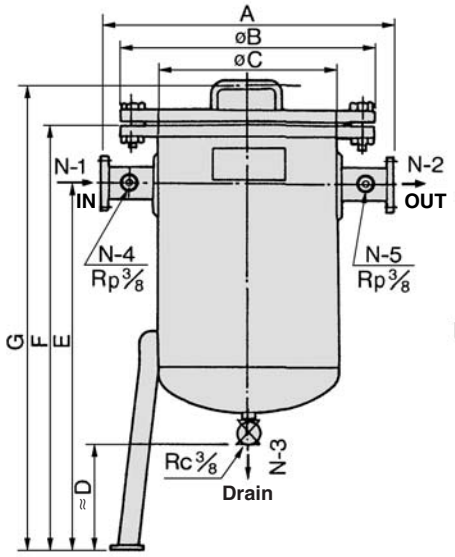


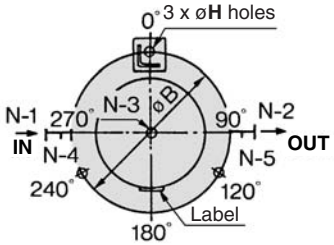


(mm)

| Model | Connection (Flange) | A | øB | øC | D | E | F | G | H | Anchor bolt |
|---|---|---|---|---|---|---|---|---|---|---|
| **AMF800** | 50(2B)JIS 10K FF flange | 500 | 330 | 200(8B) | 300 | 1070 | 1200 | 1290 | 20 | M16 x ℓ400 |
| **AMF900** | 50(2B), 80(3B), 100(4B)JIS 10K FF flange | 720 | 560 | 400 | 300 | 1070 | 1230 | 1335 | 24 | M20 x ℓ500 |
| **AMF1000** | 100(4B), 150(6B)JIS 10K FF flange | 870 | 745 | 550 | 300 | 1090 | 1320 | 1450 | 24 | M20 x ℓ500 |

## Spacer for Modular Connection

Select a spacer from those listed below when combining modular type AFF2C to 22C, AM□150C to 550C. The spacer must be ordered separately.
(Note: Spacer with bracket (Y200T to Y600T) cannot be used.)

### ⚠ Caution

**Modular connection**
**Mount the attached bracket on one side when connecting 2 sets.**
**Mount the attached brackets on both sides when connecting 3 sets or more.**
**As a guideline for the number of brackets, one bracket should be mounted for every 2 products.**

### Combination examples of modular applicable products

**Arrangement example**
**AMH250C-□□B** — 1 pc.
**AME250C** — 1 pc.
**Y300** — 1 pc.

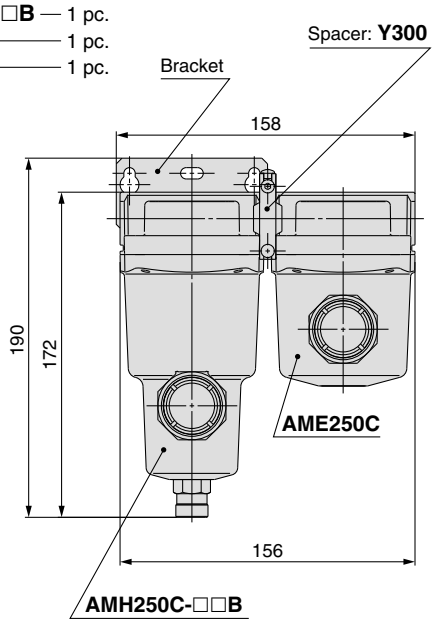


**Arrangement example**
**AMH250C-□□B** — 1 pc.
**AME250C** — 1 pc.
**AMF250C-□□B** — 1 pc.
**Y300** — 2 pcs.

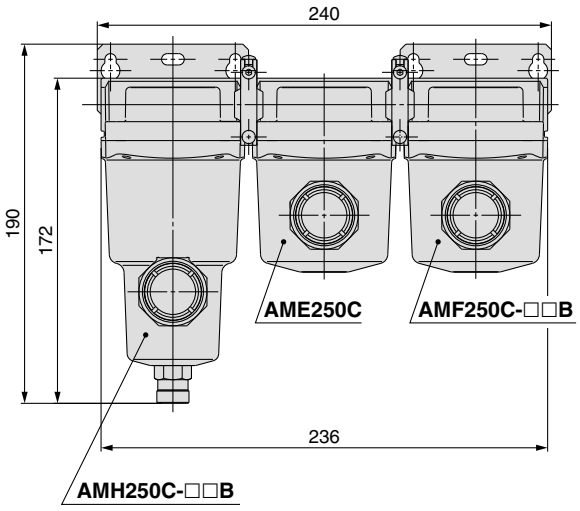


## Spacer

Y200

Y400

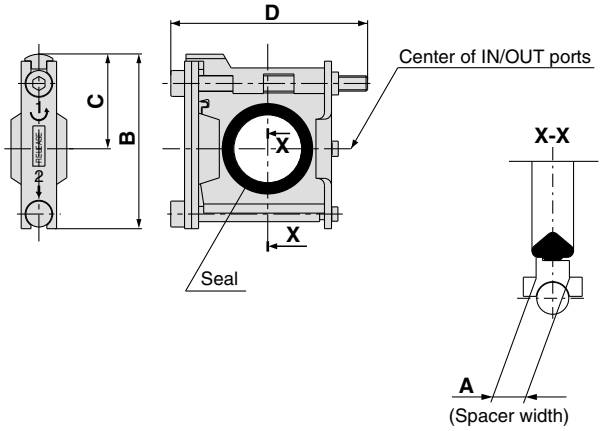


| Model | A | B | C | D | Model |
|---|---|---|---|---|---|
| **Y200** | 3 | 35.5 | 18.5 | 48 | **AFF2C, AM□150C** |
| **Y300** | 4 | 47 | 26 | 59 | **AFF4C, AM□250C** |
| **Y400** | 5 | 57 | 31 | 65 | **AFF8C, AM□350C** |
| **Y500** | 5 | 61 | 33 | 75 | **AFF11C, AM□450C** |
| **Y600** | 6 | 75.5 | 41 | 86 | **AFF22C, AM□550C** |

**Replacement Parts**

| Description | Material | Part no. | | | | |
|---|---|---|---|---|---|---|
| | | **Y200** | **Y300** | **Y400** | **Y500** | **Y600** |
| Seal | HNBR | Y200P-061S | Y300P-060S | Y400P-060S | Y500P-060S | Y600P-060S |

## Piping Adapter

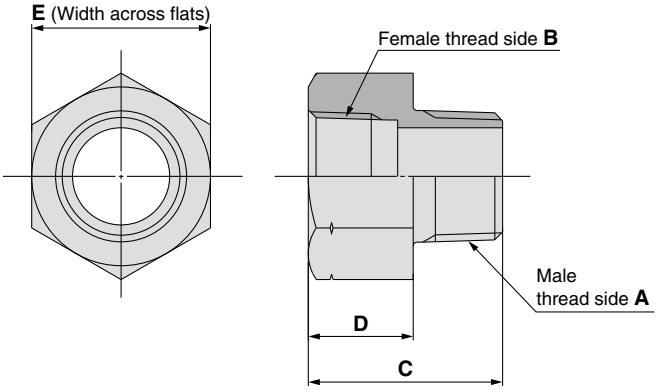


**Dimensions** (mm)

| Part no. | Thread type and port size | | C | D | E | Material |
|---|---|---|---|---|---|---|
| | Male thread side **A** | Female thread side **B** | | | | |
| **IDF-AP609** | R 3/8 | NPT 3/8 | 30 | 15 | 22 | Brass |

# Bowl Assembly
# AFF-CA□/AM□-CA□

## Bowl Assembly

Bowl assembly for the AFF and AM□ series can be replaced without removing the main body from piping if the drain exhaust specification is to be changed from the drain cock type to the auto drain type or if the bowl has been damaged.

## How to Order Bowl Assembly

### ■ AFF2C to 22C, AM, AMD, AMH, AMG150C to 550C

**AM − CA [ ] − [ ] [ ] − [ ]**

**Body size**

| |
|---|
| 150C |
| 250C |
| 350C |
| 450C |
| 550C |

**Drain exhaust**

| Symbol | Description |
|---|---|
| A | With drain cock |
| C | With N.C. auto drain |
| D | With N.O. auto drain |
| J | With drain guide Note 1) |

Note 1) Drain piping and piping for a stop valve such as a ball valve are required.

**Thread type** Note 2)

| Symbol | Type |
|---|---|
| Nil | Rc |
| F Note 3) | G |
| N | NPT |

Note 2) Corresponded to the drain exhaust symbol C, D and J. Select according to the body thread type.
Note 3) Not corresponded to the drain exhaust symbol C and D. Select no symbol when the body thread symbol is F.

**Option**

| Symbol | Description |
|---|---|
| Nil | — |
| F | Rubber material: Fluororubber |
| H | For medium air pressure (1.6 MPa) |
| V | Degreasing wash, white vaseline |

**Applicable Model**

| Bowl assembly model | Applicable model |
|---|---|
| AM-CA150C | AFF2C, AM150C, AMD150C, AMH150C, AMG150C |
| AM-CA250C | AFF4C, AM250C, AMD250C, AMH250C, AMG250C |
| AM-CA350C | AFF8C, AM350C, AMD350C, AMH350C, AMG350C |
| AM-CA450C | AFF11C, AM450C, AMD450C, AMH450C, AMG450C |
| AM-CA550C | AFF22C, AM550C, AMD550C, AMH550C, AMG550C |

**Auto Drain Specifications/ Option Combinations**

◎ : Available ■ : Not available
△ : Plural options cannot be selected. (i.e. Combinations such as C-FV, D-FHV are not possible.)

| Symbol | F | H | V |
|---|---|---|---|
| A | ◎ | ◎ | ◎ |
| C | △ | ■ | △ |
| D | △ | △ | △ |
| J | ◎ | ◎ | ◎ |

### ■ AFF37B/75B

**AFF − CA 37B − [ ] [ ]**

**Body size**

| |
|---|
| 37B |
| 75B |

**Drain exhaust**

| Symbol | Description |
|---|---|
| A | With drain cock Note 1) |
| D | With N.O. auto drain |
| J | With drain guide Note 2) |

**Thread type** Note 3)

| Symbol | Type |
|---|---|
| Nil | Rc |
| F Note 4) | G |
| N | NPT |

Note 3) Corresponded to the drain exhaust symbol D and J. Select according to the body thread type.
Note 4) Not corresponded to the drain exhaust symbol C and D. Select no symbol when the body thread symbol is F.

Note 1) Body size 75B is equipped with a ball valve (Rc3/8 female threaded). Mount a piping adapter IDF-AP609 (page 62) to the ball valve if NPT3/8 female threaded is required.
Note 2) Drain piping and piping for a stop valve such as a ball valve are required. For body size 75B, substitute with a ball valve. (symbol: A)

## How to Order Bowl Assembly

### ■ AM, AMD, AMH, AMG Series

**AM / AMD / AMH / AMG − CA 650 − □ □**

**Body size**

| |
|---|
| 650 |
| 850 |

**Thread type** Note 3)

| Symbol | Type |
|---|---|
| Nil | Rc |
| F | G |
| N | NPT |

Note 3) Corresponded to the drain exhaust symbol D and J. Select according to the body thread type.

**Drain exhaust**

| Symbol | Description |
|---|---|
| A | With drain cock Note 1) |
| D | With N.O. auto drain |
| J | With drain guide Note 2) |

Note 1) Body size 850 is equipped with a ball valve (Rc3/8 female threaded). Mount a piping adapter IDF-AP609 (page 62) to the ball valve if NPT3/8 female threaded is required.
Note 2) Drain piping and piping for a stop valve such as a ball valve are required.
For body size 850, substitute with a ball valve. (symbol: A)

### ■ AME, AMF150C to 550C

**AME − CA □ − A − □**

**Body size**

| |
|---|
| 150C |
| 250C |
| 350C |
| 450C |
| 550C |

**Option** Note)

| Symbol | Description |
|---|---|
| Nil | — |
| F | Rubber material: Fluororubber |
| H | For medium air pressure (1.6 MPa) |
| V | Degreasing wash, white vaseline |

Note) Combination of FH is not available.

**Applicable Model**

| Bowl assembly model | Applicable model |
|---|---|
| AME-CA150C | AME150C, AMF150C |
| AME-CA250C | AME250C, AMF250C |
| AME-CA350C | AME350C, AMF350C |
| AME-CA450C | AME450C, AMF450C |
| AME-CA550C | AME550C, AMF550C |

### ■ AME, AMF650/850

**AME / AMF − CA 650 − A**

**Body size**

| |
|---|
| 650 |
| 850 |

## Dimensions: AFF, AM, AMD, AMH, AMG Series

### Size: AFF2C to 22C, AFF37B, AM□150C to 550C, AM□650

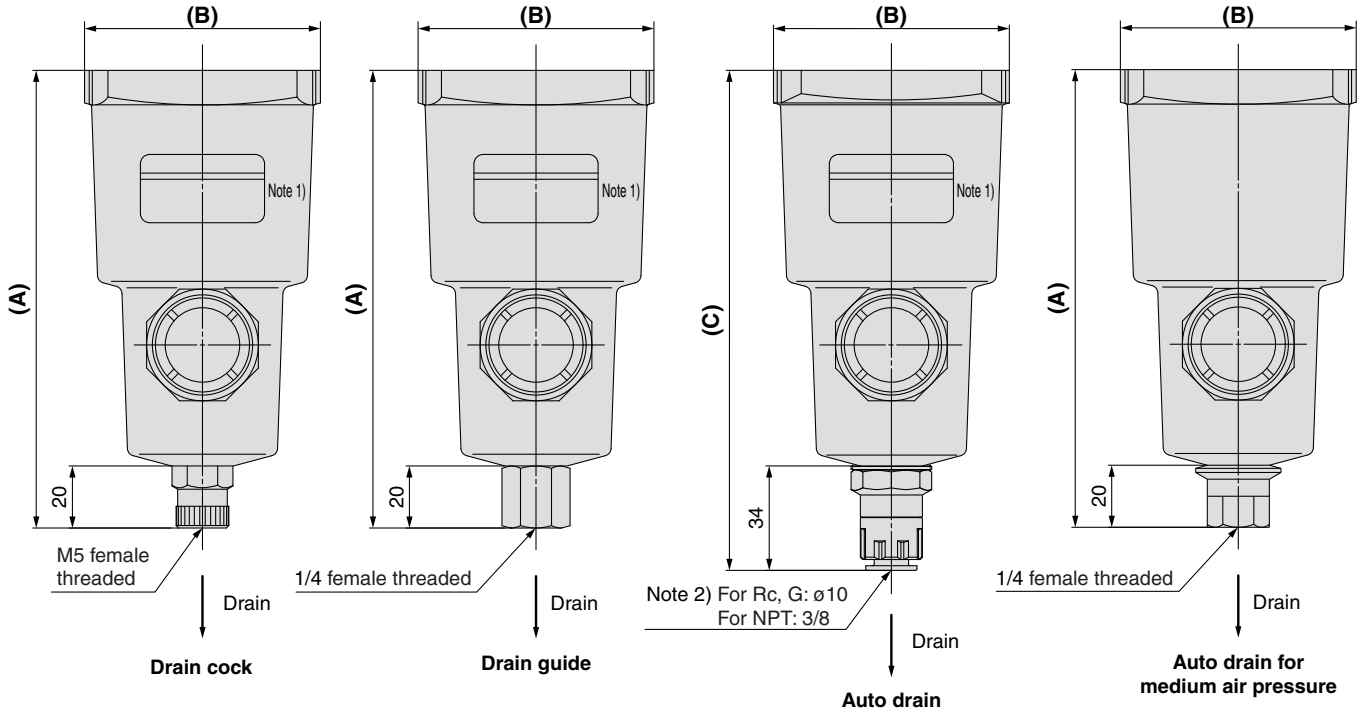


(mm)

| AFF series Size | AM, AMD, AMG, AMH series Size | A | B | C |
|---|---|---|---|---|
| **2C** | **150C** | 134 | 63 | 148 |
| **4C** | **250C** | 139 | 76 | 153 |
| **8C** | **350C** | 162 | 90 | 176 |
| **11C** | **450C** | 178 | 106 | 192 |
| **22C** | **550C** | 202 | 122 | 216 |
| **37B** | **650** | 245 | 160 | 259 |

Note 1) Model no. labels are not affixed to the AM-CA150C to 550C.
Note 2) Select according to the body thread type.
Applicable tubing size for one-touch fitting
Rc, G: ø10
NPT: ø3/8 inch

### Size: AFF75B, AM□850

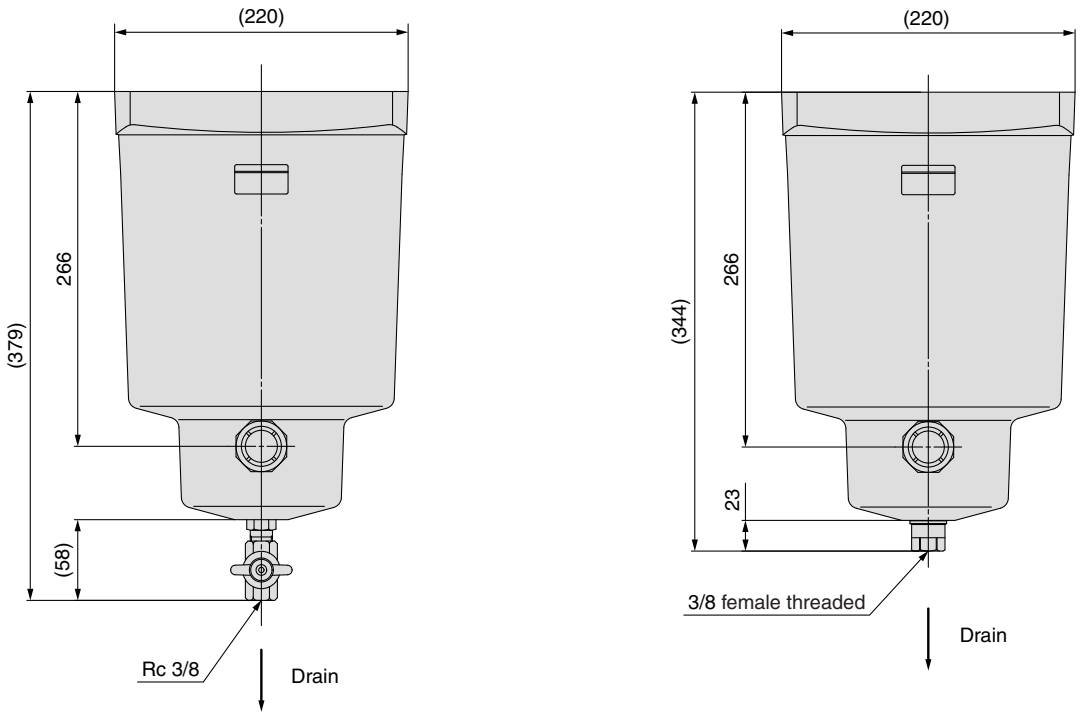

## Dimensions: AME, AMF Series

### ■ AME150C to 550C, AMF150C to 550C

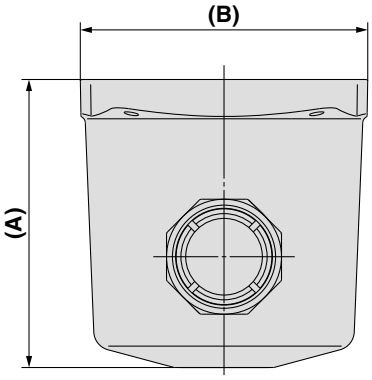


(mm)

| AME, AMF series<br>Size | A | B |
|---|---|---|
| **150** | 60 | 63 |
| **250** | 70 | 76 |
| **350** | 90 | 90 |
| **450** | 104 | 106 |
| **550** | 130 | 122 |

### ■ AME650/850, AMF650/850

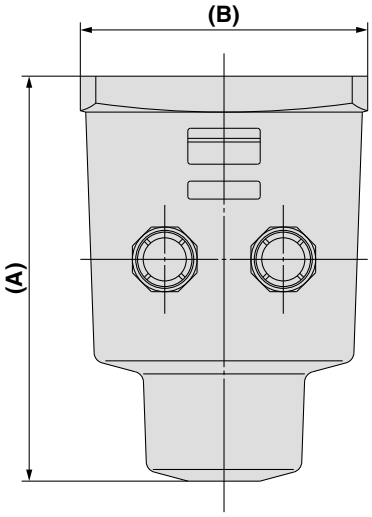


(mm)

| AME, AMF series<br>Size | A | B |
|---|---|---|
| **650** | 225 | 160 |
| **850** | 319 | 120 |

# Made to Order/Special Specifications

Please consult with SMC for detailed specifications, size and delivery.

## Made to Order

| Contents | Symbol | Applicable model | | | | | | | Reference page |
|---|---|---|---|---|---|---|---|---|---|
| | | AFF | AM | AMD | AME | AMF | AMG | AMH | |
| **1. With Differential Pressure Gauge (GD40-2-01)** | **X6** | ● | ● | ● | — | — | — | ● | P.68 |
| **2. With Differential Pressure Switch (With Indicator)** | **X37** | ● | ● | ● | — | — | — | ● | |
| **3. With IN-OUT Flange** | **X15** | ● | ● | ● | — | — | ● | ● | P.69 |
| **4. With Pressure Differential Gauge (GD40-2-01), IN-OUT Flange** | **X17** | ● | ● | ● | — | — | — | ● | |
| **5. N.C., N.O. Auto Drain, Drain Piping Type** | **X26** | ● | ● | ● | — | — | ● | ● | P.70 |
| **6. White Vaseline Specifications** | **X12** | ● | ● | ● | ● | ● | ● | ● | |
| **7. Mist Separator for High Flow Rate (0.3 μm)** | **X13** | ● | — | — | — | — | — | — | P.71 |

## Special Specifications

| Contents | Applicable model | | | | | | | Reference page |
|---|---|---|---|---|---|---|---|---|
| | AFF | AM | AMD | AME | AMF | AMG | AMH | |
| **Clean Series (10-Series)** | ● | ● | ● | ● | ● | — | ● | P.72 |
| **Copper-free, Fluorine-free (20-Series)** | ● | ● | — | — | — | ● | — | |

# Safety Instructions

These safety instructions are intended to prevent hazardous situations and/or equipment damage. These instructions indicate the level of potential hazard with the labels of **"Caution," "Warning"** or **"Danger."** They are all important notes for safety and must be followed in addition to International Standards (ISO/IEC), Japan Industrial Standards (JIS)*1) and other safety regulations*2).

* 1) ISO 4414: Pneumatic fluid power – General rules relating to systems.
ISO 4413: Hydraulic fluid power – General rules relating to systems.
IEC 60204-1: Safety of machinery – Electrical equipment of machines. (Part 1: General requirements)
ISO 10218-1992: Manipulating industrial robots -Safety.
JIS B 8370: General rules for pneumatic equipment.
JIS B 8361: General rules for hydraulic equipment.
JIS B 9960-1: Safety of machinery – Electrical equipment of machines. (Part 1: General requirements)
JIS B 8433-1993: Manipulating industrial robots - Safety.
etc.
* 2) Labor Safety and Sanitation Law, etc.

⚠ **Caution:** Operator error could result in injury or equipment damage.

⚠ **Warning:** Operator error could result in serious injury or loss of life.

⚠ **Danger :** In extreme conditions, there is a possibility of serious injury or loss of life.

## ⚠ Warning

1. **The compatibility of the product is the responsibility of the person who designs the equipment or decides its specifications.**
Since the product specified here is used under various operating conditions, its compatibility with specific equipment must be decided by the person who designs the equipment or decides its specifications based on necessary analysis and test results. The expected performance and safety assurance of the equipment will be the responsibility of the person who has determined its compatibility with the product. This person should also continuously review all specifications of the product referring to its latest catalog information, with a view to giving due consideration to any possibility of equipment failure when configuring the equipment.
2. **Only personnel with appropriate training should operate machinery and equipment.**
The product specified here may become unsafe if handled incorrectly. The assembly, operation and maintenance of machines or equipment including our products must be performed by an operator who is appropriately trained and experienced.
3. **Do not service or attempt to remove product and machinery/equipment until safety is confirmed.**
   1. The inspection and maintenance of machinery/equipment should only be performed after measures to prevent falling or runaway of the driven objects have been confirmed.
   2. When the product is to be removed, confirm that the safety measures as mentioned above are implemented and the power from any appropriate source is cut, and read and understand the specific product precautions of all relevant products carefully.
   3. Before machinery/equipment is restarted, take measures to prevent unexpected operation and malfunction.
4. **Contact SMC beforehand and take special consideration of safety measures if the product is to be used in any of the following conditions.**
   1. Conditions and environments outside of the given specifications, or use outdoors or in a place exposed to direct sunlight.
   2. Installation on equipment in conjunction with atomic energy, railways, air navigation, space, shipping, vehicles, military, medical treatment, combustion and recreation, or equipment in contact with food and beverages, emergency stop circuits, clutch and brake circuits in press applications, safety equipment or other applications unsuitable for the standard specifications described in the product catalog.
   3. An application which could have negative effects on people, property, or animals requiring special safety analysis.
   4. Use in an interlock circuit, which requires the provision of double interlock for possible failure by using a mechanical protective function, and periodical checks to confirm proper operation.

# Safety Instructions

## ⚠Caution

**The product is provided for use in manufacturing industries.**
The product herein described is basically provided for peaceful use in manufacturing industries.
If considering using the product in other industries, consult SMC beforehand and exchange specifications or a contract if necessary. If anything is unclear, contact your nearest sales branch.

# Limited Warranty and Disclaimer/Compliance Requirements

The product used is subject to the following “Limited Warranty and Disclaimer” and “Compliance Requirements”. Read and accept them before using the product.

## Limited Warranty and Disclaimer

1. **The warranty period of the product is 1 year in service or 1.5 years after the product is delivered.*3)**
   **Also, the product may have specified durability, running distance or replacement parts. Please consult your nearest sales branch.**
2. **For any failure or damage reported within the warranty period which is clearly our responsibility, a replacement product or necessary parts will be provided.**
   **This limited warranty applies only to our product independently, and not to any other damage incurred due to the failure of the product.**
3. **Prior to using SMC products, please read and understand the warranty terms and disclaimers noted in the specified catalog for the particular products.**

   **∗ 3) Vacuum pads are excluded from this 1 year warranty.**
   A vacuum pad is a consumable part, so it is warranted for a year after it is delivered.
   Also, even within the warranty period, the wear of a product due to the use of the vacuum pad or failure due to the deterioration of rubber material are not covered by the limited warranty.

## Compliance Requirements

**When the product is exported, strictly follow the laws required by the Ministry of Economy, Trade and Industry (Foreign Exchange and Foreign Trade Control Law).**

# Series AM□/AFF
# Specific Product Precautions 1

**Be sure to read this before handling. Refer to back pages 1 and 2 for Safety Instructions, and "Precautions for Handling Pneumatic Devices" (M-03-E3A) for Common Precautions.**

## Design

## ⚠ Caution

**1. Design the layout so that the mist separator should be installed in an area that is less susceptible to pulsations.**

The element could be damaged if a difference between the inlet pressure and the outlet pressure exceeds 0.1 MPa.

**2. Be careful of dust generation by the pneumatic equipment mounted on the outlet side.**

When installing pneumatic equipment on the outlet side of the AM□ series, dust particles may come off from outlet equipment, which will lower the cleanliness of compressed air. Consider this impact upon the cleanliness of compressed air when installing pneumatic equipment on the outlet side.

**3. About when to use N.C. auto drain and N.O. auto drain.**

When using the AFF2C to 22C, 37B, 75B, AM□150C to 550C, 650, 850 with normally open (N.O.) auto drain, air may ceaselessly blow out of the drain discharge area when an air compressor with a small air discharge volume is used since the valve does not close unless the air pressure is 0.1 MPa or higher. Therefore, when using a compressor for 3.7 kW or less, make sure to use the normally closed (N.C.) auto drain. The minimum operating pressure is 0.15 MPa even with N.C. auto drain.

**4. Use a tubing with proper size and length for drain piping of auto drain.**

When using the AFF2C to 22C, 37B, AM□150C to 550C, 650 with auto drain:

Normally closed (N.C.)
Normally open (N.O.)
} Use tubing O.D. 10 mm and keep the whole length within 5 m.

When using the AFF75B and AM□850 with auto drain:

Normally open (N.O.): Use tubing I.D. 9 mm or more and keep the whole length within 2.8 m.

**5. Provide a design that prevents back pressure and back flow.**

Back pressure or back flow may damage an element.

**6. Keep the certificate of Class 2 Pressure Vessel in a safe place.**

Products below are subject to Class 2 Pressure Vessel Act. Certificate will be sent in 2 to 4 weeks later after the shipment of the product.

Main Line Filter ····· AFF220A

Micro Mist Separator····· AMD9□0/10□0/9□1

## ⚠ Warning

**1. Hold the female thread side and tighten to the recommended torque when screwing in the piping material.**

Insufficient tightening torque may cause loosening or defective sealing. Over-tightening torque may damage the thread etc. If it is tightened without holding the female thread side, excessive force will be directly applied to the piping bracket resulting in a product failure.

**Recommended Torque** Unit: N·m

| Connection thread | 1/8 | 1/4 | 3/8 | 1/2 | 3/4 | 1 | 1 1/2 | 2 |
|---|---|---|---|---|---|---|---|---|
| Torque | 1.5 to 2 | 7 to 9 | 12 to 14 | 28 to 30 | 28 to 30 | 36 to 38 | 48 to 50 | 48 to 50 |

∗ After tightening manually, tighten additionally by about 1/6 turn with a tightening tool.

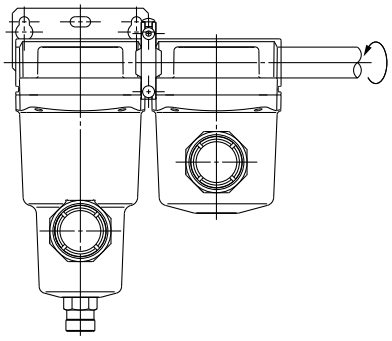

**2. Do not apply torsional moment or bending moment (except the product's own weight) to the bracket. It may damage the bracket. Support external piping separately.**

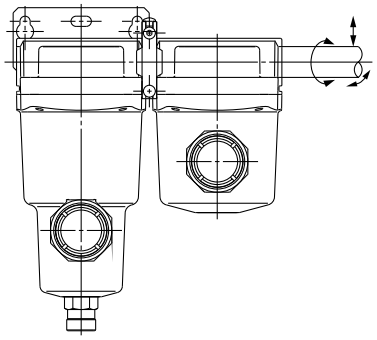

**3. Inflexible piping such as steel piping tends to be affected by spread of excessive moment load or vibration from the piping side. Lay flexible tubing between the steel pipe and the product to prevent such effects.**

# Series AM□/AFF
# Specific Product Precautions 2

**Be sure to read this before handling. Refer to back pages 1 and 2 for Safety Instructions, and "Precautions for Handling Pneumatic Devices" (M-03-E3A) for Common Precautions.**

## Selection

### ⚠Caution

**1. About the system composition of purifying compressed air**

Compressed air generally contains particulate contaminants as listed below, though there are some variations due to the compressor type and specifications. Determine the system configuration according to the desired cleanliness of compressed air and application, while referring to the "Air Preparation Equipment Selection Guide" for the AM□ series (Best Pneumatics).

**[Particulate contaminants in compressed air]**
- Water (drainage)
- Dust sucked from ambient air
- Degenerated oil from compressor
- Solid foreign matter such as rust inside piping and oil

**2. Select according to the maximum flow consumption.**

When compressed air is used for air blow, etc., find the maximum air consumption before selecting the size of the AM□ series. (If compressed air exceeding the maximum flow rate is supplied, it can result in decline of the cleanliness of compressed air or element damage.)

## Mounting

### ⚠Caution

**1. About the mounting orientation of the products**

Make sure to install this product on horizontal piping. If it is installed diagonally, laterally, or upside down, the drain separated by the element will splash to the outlet side.

## Piping

### ⚠Caution

**1. Connect it with IN and OUT ports in proper location. It does not work with the connection reversed.**

In the case of the AFF2C to 22C, 37B, 75B, AM□150C to 550C, 650, 850

Verify the direction of the flow of the compressed air and the "⇨" or "▷" mark that indicates the inlet of the product before connecting. It cannot be used if connected in the opposite direction.

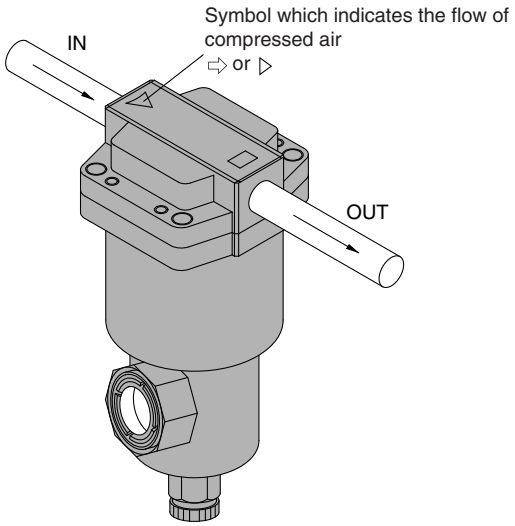


In the case of the AFF75A to 220A, AMD801, 901, 800, 900, 1000

INLET and OUTLET of compressed air is labeled on the side of flange. Be sure to connect correctly.

**2. Use an air blower to flush the piping before connecting the piping.**

Use an air blower to thoroughly flush the piping, or wash the piping to remove any cutting chips, cutting oil, or debris from inside the piping before connecting them.

**3. Wrapping of sealant tape**

When screwing in the pipes or fittings, make sure to prevent cutting chips or the sealant material on the threaded portion of the pipe from entering the piping. If sealant tape is to be used, leave about 1.5 to 2 ridges of threads uncovered.

**4. Modular connection**

Mount the attached bracket on one side when connecting 2 sets. Mount the attached brackets on both sides when connecting 3 sets or more. As a guideline for the number of brackets, one bracket should be mounted for every 2 products.

# Series AM□/AFF
# Specific Product Precautions 3

**Be sure to read this before handling. Refer to back pages 1 and 2 for Safety Instructions, and "Precautions for Handling Pneumatic Devices" (M-03-E3A) for Common Precautions.**

## Air Supply

### ⚠Caution

**1. The mist separator is not applicable to gases other than compressed air.**

The mist separator is not applicable to gases other than compressed air (example: oxygen, hydrogen, flammable gas, mixed gas).

**2. Do not use compressed air that contains chemicals, organic solvents, salt, or corrosive gases.**

Do not use compressed gas containing chemicals, organic solvents, salt or corrosive gas. This can cause rust, damage to rubber and resin parts, or malfunction.

**3. Operate within the specified operating pressure range.**

Damage, failure, or malfunction may occur if the mist separator is operated above the maximum operating pressure.
If the mist separator is used below the minimum operating pressure, increase in the air-flow resistance due to clogging will have such influence that the desired flow rate cannot be obtained.
If the mist separator is used under a low pressure such as for a blower, conduct sufficient tests by users to confirm the specifications and performances.

## Operating Environment

### ⚠Caution

**1. Do not use in the following environments, as this can cause failure.**

1) In locations having corrosive gases, organic solvents, and chemical solutions, or in locations where these elements are likely to adhere to the equipment.
2) In locations where salt water, water, or water vapor could come in contact with the equipment.
3) In locations that is exposed to shocks and vibrations.

**2. Be careful about the contamination of the workpieces due to entrainment of the ambient air.**

If compressed air is used for air blow, compressed air blowing out from the blow nozzle may entrain foreign matter (solid particles and liquid particles) floating in the ambient air, blowing it against the workpieces and causing adhesion. Therefore, sufficient precautions must be taken about the ambient environment.

## Maintenance

### ⚠Caution

**1. Replace the element immediately when the time for its replacement has arrived.**

To replace the element, replace the O-ring and the gasket, too. For the replacement procedure, refer to the operating manual. (For element dimensions, refer to back page 6.)

**<Element replacement>**

In the case of the AFF2C to 22C, 37B, 75B, AM□150C to 550C, 650, 850

The replacement interval for the element is when the pressure drop reaches 0.1 MPa or after two years of operation, whichever comes first. A pressure drop can be verified with the element service indicator (-T) or with differential pressure gauge (Made to Order).

In the case of the AFF75A to 220A, AMD800 to 1000, AMD801, 901

The replacement interval for the element is when the pressure drop reaches 0.1 MPa or after one year of operation, whichever comes first. Confirm the pressure drop with a pressure gauge. (With pressure gauge: -G)

**2. Be sure to exhaust the drain accumulated in the filter container.**

Failure to discharge the drain will allow the accumulated drain to flow over to the outlet side.
When using the AFF2C to 22C, 37B, 75B, AM□150C to 550C, 650, 850 with drain cock, drain guide or ball valve, discharge the drain before the drainage level reaches the center of the sight glass. If the drain is not discharged properly, it will flow over to the outlet side.

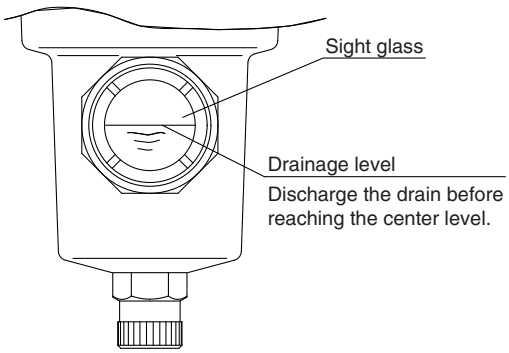

# Series AM□/AFF
# Specific Product Precautions 4

**Be sure to read this before handling. Refer to back pages 1 and 2 for Safety Instructions, and "Precautions for Handling Pneumatic Devices" (M-03-E3A) for Common Precautions.**

## Maintenance

## ⚠Caution

**3. In the case of a type with auto drain**

- The auto drain operates when the drainage level reaches the top of the sight glass, and the drain will be discharged.
- When using the AFF2C to 22C, 37B, AM□150C to 550C, 650 with auto drain, the drain is automatically discharged with the knob tightened to the "S" side. Manual drain discharge, however, is also possible.

**<Manual operation>**

A manual knob attached to the auto drain end is tightened to the "S" side in normal operation. The drain can be discharged by loosening it to the "O" side. (Be careful, however, if pressure remains inside the filter when the drain is discharged, the drain will blow out from the drain port.)

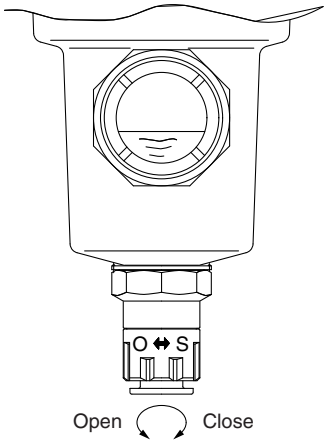


**4. The drain exhaust parts replacement method and necessary parts are different depending on when it was manufactured.**

| Description | Necessary parts | | Applicable size |
|---|---|---|---|
| | Manufactured Dec. 2002 or before [Up to manufacturing lot No. GZ] | Manufactured Jan. 2003 onwards [Manufacturing lot No. HO onwards] | |
| Drain cock | AM-SA002 | | 2C to 22C<br>2B to 37B<br>150C to 550C<br>150 to 650 |
| Drain guide | AM-SA003 | | |
| N.O. auto drain | Auto drains cannot be replaced alone since those cannot be assembled without dedicated assembly tools. The entire bowl assembly must be replaced. (Refer to "How to Order Bowl Assembly" on page 63.) | AD43PA-D | |
| N.C. auto drain | | AD53PA-D | 2C to 22C<br>2B to 22B<br>150C to 550C<br>150 to 550 |
| Ball valve set | AM-SA004 | | 75B, 850 |
| N.O. auto drain | AD34PA-D Note) | | |

Note) Jig (AM-SA005) for replacing auto drain is necessary for the 75B or 850.

## Others

## ⚠Caution

**1. Element interchange**

Following is the element dimensions for the AFF and AM□ series:
Since elements for the same body size has the same dimensions, they are interchangeable.
However, do not interchange them easily since it can cause various kinds of problems.
If interchanging the elements is unavoidable, replace the product model number label, too.

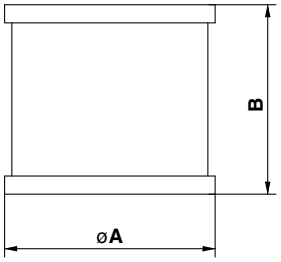


**Element Dimensions**

| Model | Element dimensions (Reference value) | |
|---|---|---|
| | øA | B |
| AFF2C, AFF2B, AM150C, AM150<br>AMD150C, AMD150, AMH150C, AMH150 | 49 | 42 |
| AFF4C, AFF4B, AM250C, AM250<br>AMD250C, AMD250, AMH250C, AMH250 | 58 | 52 |
| AFF8C, AFF8B, AM350C, AM350<br>AMD350C, AMD350, AMH350C, AMH350 | 70 | 78 |
| AFF11C, AFF11B, AM450C, AM450<br>AMD450C, AMD450, AMH450C, AMH450 | 82 | 88 |
| AFF22C, AFF22B, AM550C, AM550<br>AMD550C, AMD550, AMH550C, AMH550 | 96 | 118 |
| AFF37B, AM650<br>AMD650, AMH650 | 122 | 144 |
| AFF75B, AM850<br>AMD850, AMH850 | 142 | 223 |

**2. About oil-free products**

The AFF and AM□ series includes parts (such as resin parts, rubber parts, and elements) that does not allow degreasing wash. Therefore, oil-free products with all parts degreasing washed is not available.

**3. Degreasing wash**

Certain parts such as the body and housing can be degreasing washed. Contact SMC after confirming the specifications. (available as Option or Made to Order)

**4. Change of oil**

On the AFF and AM□ series, no oil such as grease is applied to parts exposed to compressed air. However, for certain specifications, there are some parts to which oil is applied.
It is possible to change the type of applied oil (as Option or Made to Order).

# Series AM□/AFF
# Specific Product Precautions 5

**Be sure to read this before handling. Refer to back pages 1 and 2 for Safety Instructions, and "Precautions for Handling Pneumatic Devices" (M-03-E3A) for Common Precautions.**

## Others

## ⚠ Caution

**5. Internal volume of filter container**

The product can be used as a small capacity air tank by removing the element.
Following is the volume of filter containers of the AFF and AM□ series (when the element is removed).

**Volume Inside Filter**

| Model | Volume inside filter (Reference value) ($cm^3$) |
|---|---|
| AFF2C, AFF2B, AM150C, AM150<br>AMD150C, AMD150, AMH150C, AMH150 | 250 |
| AFF4C, AFF4B, AM250C, AM250<br>AMD250C, AMD250, AMH250C, AMH250 | 300 |
| AFF8C, AFF8B, AM350C, AM350<br>AMD350C, AMD350, AMH350C, AMH350 | 600 |
| AFF11C, AFF11B, AM450C, AM450<br>AMD450C, AMD450, AMH450C, AMH450 | 1000 |
| AFF22C, AFF22B, AM550C, AM550<br>AMD550C, AMD550, AMH550C, AMH550 | 1500 |
| AFF37B, AM650<br>AMD650, AMH650 | 3000 |
| AFF75B, AM850<br>AMD850, AMH850 | 9000 |

## Discontinued Model and Equivalent Model

The AFF and AM□ series were remodeled to products introduced in this catalog in 1988.
Along with the new models, old models were provided mainly for the purpose of maintenance. However, due to the aging of metal dies and extreme decline in the quantity, the procurement of parts and consequently the maintenance of the production system became difficult. For this reason, old models were discontinued in 1994, as detailed in the table below. Use the equivalent model listed there.

**Discontinued Model and Equivalent Model**

| Product name | Production discontinuance | | | | Equivalent model | | |
|---|---|---|---|---|---|---|---|
| | Model | Period of production discontinuance for products | Period of production discontinuance for maintenance parts | External dimensions of product Width x Depth x Height | Model | External dimensions of product Width x Depth x Height | Page |
| Main Line Filter | AFF6 | End of July '94 | End of March '99 | 100 x 100 x 253 | AFF4C | 76 x 76 x 172 | P.10 |
| | AFF22 | | | 150 x 140 x 446 | AFF22C | 122 x 122 x 259 | |
| | AFF37 | | | 200 x 170 x 526 | AFF37B | 160 x 160 x 311 | |
| | AFF55 | | | 280 x 280 x 497 | AFF75B | 220 x 220 x 461 | |
| Mist Separator | AM200 | | | 63 x 63 x 191 | AM150C | 63 x 63 x 158 | P.18 |
| | AM300 | | | 85 x 85 x 258 | AM250C | 76 x 76 x 172 | |
| | AM400 | | | 120 x 120 x 236 | AM350C | 90 x 90 x 204 | |
| | AM500 | | | 140 x 140 x 383 | AM550C | 122 x 122 x 259 | |
| | AM600 | | | 180 x 170 x 465 | AM650 | 160 x 160 x 311 | |
| Micro Mist Separator | AMD100 | | | 63 x 63 x 136 | AMD150C | 63 x 63 x 158 | P.26 |
| | AMD200 | | | 80 x 82 x 170 | AMD250C | 76 x 76 x 172 | |
| | AMD300 | | | 90 x 90 x 233 | AMD350C | 90 x 90 x 204 | |
| | AMD400 | | | 140 x 140 x 380 | AMD450C | 106 x 106 x 225 | |
| | AMD500 | | | 140 x 140 x 490 | AMD550C | 122 x 122 x 259 | |
| | AMD600 | | | 140 x 140 x 590 | AMD650 | 160 x 160 x 311 | |
| Odor Removal Filter | AMF200 | | | 80 x 80 x 153 | AMF250C | 76 x 76 x 103 | P.52 |
| | AMF300 | | | 90 x 90 x 216 | AMF350C | 90 x 90 x 132 | |
| | AMF400 | | | 140 x 140 x 250 | AMF450C | 106 x 106 x 151 | |
| | AMF500 | | | 140 x 140 x 360 | AMF550C | 122 x 122 x 187 | |
| | AMF600 | | | 140 x 140 x 460 | AMF650 | 160 x 160 x 291 | |

Note) Some models have different heights depending on the port size. They are shown in parentheses.